MASSACHUSETTS DEPARTMENT OF TRANSPORTATION
HIGHWAY DIVISION

WOBURN NEW BOSTON STREET			
STATE	FED. AID PROJ. NO.	SHEET NO.	TOTAL SHEETS
MA	TBD	01	147
PROJECT FILE NO.	604996		

TITLE SHEET & INDEX

PLAN AND PROFILE OF

BRIDGE REPLACEMENT PROJECT

NEW BOSTON STREET

IN THE TOWN OF

WOBURN

MIDDLESEX COUNTY

FEDERAL AID PROJECT NO. TBD

100% SUBMISSION

THESE PLANS ARE SUPPLEMENTED BY THE OCTOBER 2017 CONSTRUCTION STANDARD DETAILS, THE 2015 OVERHEAD SIGNAL STRUCTURE AND FOUNDATION STANDARD DRAWINGS, MASSDOT TRAFFIC MANAGEMENT PLANS AND DETAIL DRAWINGS, THE 1990 STANDARD DRAWINGS FOR SIGNS AND SUPPORTS, THE 1968 STANDARD DRAWINGS FOR TRAFFIC SIGNALS AND HIGHWAY LIGHTING, AND THE LATEST EDITION OF THE AMERICAN STANDARD FOR NURSERY STOCK.

INDEX

SHEET NO.	DESCRIPTION
01	TITLE SHEET & INDEX
02 - 03	LEGEND & GENERAL NOTES
04	KEY PLAN
05 - 08	EXISTING CONDITIONS PLANS
09	EPA LAND CLASS PLAN
10 - 11	EPA EXISTING LAND COVER PLANS
12 - 16	TYPICAL SECTIONS & PAVEMENT NOTES
17 - 20	CONSTRUCTION PLANS
22 - 23	PROFILES
24 - 27	ALIGNMENT PLANS
29 - 32	GRADING PLANS
34 - 35	STORMWATER BMP PLANS
36 - 39	SIGNING & STRIPING PLANS
40 - 45	UTILITY PLANS
46	GROUND IMPROVEMENT PLAN
47 - 48	EPA LAND COVER IMPACT PLANS
49 - 51	TEMPORARY TRAFFIC CONTROL PLANS
52 - 66	CONSTRUCTION STAGING
67 - 71	CONSTRUCTION DETAILS
74 - 76	WCR & DRIVEWAY DETAILS
77 - 78	HEADWALL DETAILS
79 - 81	RETAINING WALL PLANS
82 - 128	BRIDGE PLANS
129 - 147	CROSS SECTIONS

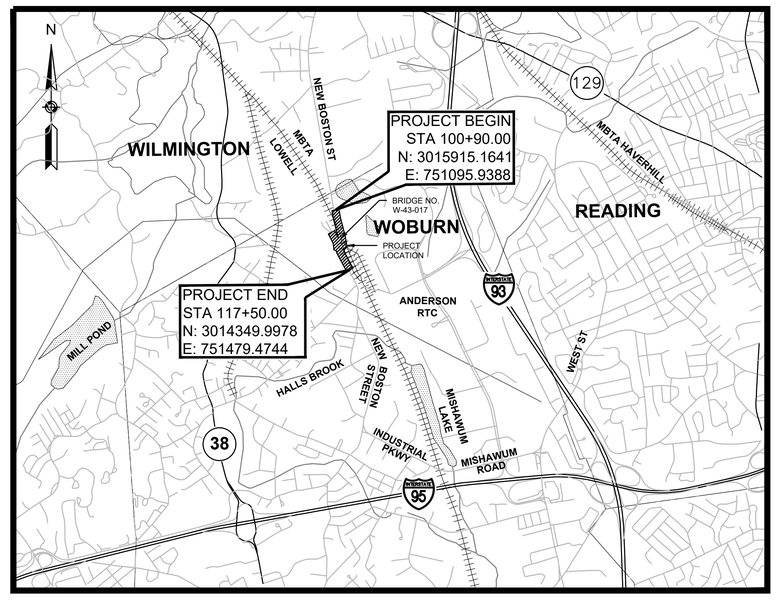

0 2000 4000 6000 8000

SCALE: 1" = 2,000'

LENGTH OF PROJECT = 1,660.00 FEET = 0.314 MILES

DESIGN DESIGNATION (NEW BOSTON STREET)

POSTED SPEED	25 MPH (UNPOSTED)
DESIGN SPEED	30 MPH
ADT (2016)	N/A
ADT (2040)	17,000
K	0.07
D	65%
T (PEAK HOUR)	5.9%
T (AVERAGE DAY)	5.7%
DHV	1,410
DDHV	916
FUNCTIONAL CLASSIFICATION	URBAN MINOR ARTERIAL

DATE	DESCRIPTION	REV #
08-03-2020	100% SUBMISSION	3
06-10-2019	75% SUBMISSION	2
04-18-2016	25% RESUBMISSION	1
07-15-2011	25% SUBMISSION	0

PLAN PREPARED BY:

vhb

101 WALNUT STREET
WATERTOWN, MA 02471

massDOT
Massachusetts Department of Transportation
Highway Division

RECOMMENDED FOR APPROVAL

CHIEF ENGINEER DATE

DEPARTMENT OF TRANSPORTATION
FEDERAL HIGHWAY ADMINISTRATION

APPROVED:

DIVISION ADMINISTRATOR DATE

APPROVED

HIGHWAY ADMINISTRATOR DATE

604996_HD(COV).DWG Plotted on 3-Aug-2020 5:57 PM

GENERAL ABBREVIATIONS

ABAN	ABANDON
ADJ	ADJUST
APPROX	APPROXIMATE
A.C.	ASPHALT CONCRETE
ACCM PIPE	ASPHALT COATED CORRUGATED METAL PIPE
BIT.	BITUMINOUS
BC	BOTTOM OF CURB
BD.	BOUND
BL	BASELINE
BLDG	BUILDING
BM	BENCHMARK
BO	BY OTHERS
BOS	BOTTOM OF SLOPE
BR.	BRIDGE
BVW	BORDERING VEGETATED WETLAND
CC	CEMENT CONCRETE
CCB	CEMENT CONCRETE BERM
CCM	CEMENT CONCRETE MASONRY
CEM	CEMENT
CI	CURB INLET
CLF	CHAIN LINK FENCE
CL	CENTERLINE
CO.	COUNTY
CONC	CONCRETE
CONT	CONTINUOUS / CONTINUED
CONST	CONSTRUCTION
CR GR	CROWN GRADE
DIA	DIAMETER
DWY	DRIVEWAY
ELEV (or EL.)	ELEVATION
EMB	EMBANKMENT
EOP	EDGE OF PAVEMENT
EQ	EQUAL
EXIST (or EX)	EXISTING
EXC	EXCAVATION
FDN.	FOUNDATION
FDP	FULL DEPTH PAVEMENT
FLDSTN	FIELDSTONE
GAR	GARAGE
GD	GROUND
GRAN	GRANITE
GRAV	GRAVEL
GRD	GUARD
HMA	HOT MIX ASPHALT
HOR	HORIZONTAL
HWY	HIGHWAY
JCT	JUNCTION
LOAM	LOAM BORROW
LSA	LANDSCAPED AREA
LT	LEFT
MAHWL	MEAN AVERAGE HIGH WATER LINE
MAX	MAXIMUM
MB	MAILBOX
MHB	MASSACHUSETTS HIGHWAY BOUND
MIN	MINIMUM
MOD	MODIFIED
MSE	MECHANICALLY STABILIZED EARTH
NERR	NEW ENGLAND RAILROAD
NIC	NOT IN CONTRACT
NO.	NUMBER
NBS	NEW BOSTON STREET
NTS	NOT TO SCALE
O.C.	ON CENTER
O.D.	OUTSIDE DIAMETER
P.G.L.	PROFILE GRADE LINE
PREV	PREVIOUS/PREVIOUSLY
PROJ	PROJECT
PROP	PROPOSED
PSB	PLANTABLE SOIL BORROW
PVMT	PAVEMENT
R&D	REMOVE AND DISCARD
R&R	REMOVE AND RESET
R&S	REMOVE AND STACK
RD	ROAD
RDWY	ROADWAY
REB	REBUILD
REM	REMOVE
REMOD	REMODEL
RET	RETAIN
RET WALL	RETAINING WALL
ROW	RIGHT OF WAY
RR	RAILROAD
RT	RIGHT
SB	STONE BOUND
SHLD	SHOULDER

GENERAL ABBREVIATIONS (CONT)

SHLO/S.H.L.O.	STATE HIGHWAY LAYOUT LINE
ST	STREET
STA	STATION
STD	STANDARD
SW	SIDEWALK
TEMP	TEMPORARY
TC	TOP OF CURB
TOS	TOP OF SLOPE
TRANS	TRANSITION
TRM	TURF REINFORCING MAT
TYP	TYPICAL
VAR	VARIES
VERT	VERTICAL
WCR	WHEEL CHAIR RAMP
WP	WORKING POINT
X-SECT	CROSS SECTION

UTILITY ABBREVIATIONS

CB	CATCH BASIN
CBCI	CATCH BASIN WITH CURB INLET
CIP	CAST IRON PIPE
CIT	CHANGE IN TYPE
CMP	CORRUGATED METAL PIPE
CSP	CORRUGATED STEEL PIPE
DI	DROP INLET
DIP	DUCTILE IRON PIPE
FES	FLARED END SECTION
F&C	FRAME AND COVER
F&G	FRAME AND GRATE
GG	GAS GATE
GI	GUTTER INLET
GIP	GALVANIZED IRON PIPE
HDPE	HIGH DENSITY POLYETHYLENE PIPE
HDW	HEADWALL
HYD	HYDRANT
INV	INVERT
LB	LEACH BASIN
LP	LIGHT POLE
MH	MANHOLE
MW	MONITORING WELL
OHW	OVERHEAD WIRE
PVC	POLYVINYLCHLORIDE PIPE
PWW	PAVED WATER WAY
RCP	REINFORCED CONCRETE PIPE
SMH	SEWER MANHOLE
TSV&B	TAPPING SLEEVE VALVE & BOX
UP	UTILITY POLE
WG	WATER GATE
WIP	WROUGHT IRON PIPE
WM	WATER METER/WATER MAIN

ALIGNMENT & GRADING ABBREVIATIONS

CC	CENTER OF CURVE
HP	HIGH POINT
I.T.	INTERSECTION OF TANGENT
LP	LOW POINT
PC	POINT OF CURVATURE
PCC	POINT OF COMPOUND CURVATURE
PI	POINT OF INTERSECTION
PNT	POINT
POC	POINT ON CURVE
POT	POINT ON TANGENT
PRC	POINT OF REVERSE CURVATURE
PT	POINT OF TANGENCY
∠PT	ANGLE POINT
R	RADIUS OF CURVATURE
T	TANGENT DISTANCE OF CURVE
TAN	TANGENT
25.45	SPOT ELEVATION

PROFILE ABBREVIATIONS

AD	ALGEBRAIC DIFFERENCE IN RATES OF GRADE
HSD	HORIZONTAL SIGHT DISTANCE
K	RATE OF VERTICAL CURVATURE
L	LENGTH OF CURVE
PVC	POINT OF VERTICAL CURVATURE
PVCC	POINT OF VERTICAL COMPOUND CURVATURE
PVI	POINT OF VERTICAL INTERSECTION
PVRC	POINT OF VERTICAL REVERSE CURVATURE
PVT	POINT OF VERTICAL TANGENCY
SSD	STOPPING SIGHT DISTANCE
VC	VERTICAL CURVE

TRAFFIC & SIGNAL ABBREVIATIONS

AADT	ANNUAL AVERAGE DAILY TRAFFIC
CAB.	CABINET
CCVE	CLOSED CIRCUIT VIDEO EQUIPMENT
COND	CONDUIT
CW	CROSS WALK
DW	STEADY DON'T WALK - PORTLAND ORANGE
DHV	DESIGN HOURLY VOLUME
FDW	FLASHING DON'T WALK
FR	FLASHING CIRCULAR RED
FRL	FLASHING RED LEFT ARROW
FRR	FLASHING RED RIGHT ARROW
FY	FLASHING CIRCULAR AMBER
FYL	FLASHING AMBER LEFT ARROW
FYR	FLASHING AMBER RIGHT ARROW
G	STEADY CIRCULAR GREEN
GL	STEADY GREEN LEFT ARROW
GR	STEADY GREEN RIGHT ARROW
GSL	STEADY GREEN SLASH LEFT ARROW
GSR	STEADY GREEN SLASH RIGHT ARROW
GV	STEADY GREEN VERTICAL ARROW
HH	HAND HOLE
OL	OVERLAP
PB	PULL BOX
PED	PEDESTRIAN
PTZ	PAN, TILE, ZOOM
R	STEADY CIRCULAR RED
RL	STEADY RED LEFT ARROW
RR	STEADY RED RIGHT ARROW
SL	STOP LINE
T	TRUCK %
TS OR TR SIG	TRAFFIC SIGNAL
TSC	TRAFFIC SIGNAL CONDUIT
W	STEADY WALK
VZ	VERIZON
Y	STEADY CIRCULAR AMBER
YL	STEADY AMBER LEFT ARROW

GENERAL NOTES

1. TOPOGRAPHICAL INFORMATION FROM A SURVEY BY HANCOCK ASSOCIATES, BETWEEN THE DATES OF JANUARY 2019 AND MAY 2019 AND SUPPLEMENTED IN JUNE OF 2020.
2. THE HORIZONTAL CONTROL IS BASED ON THE MASSACHUSETTS MAINLAND STATE PLANE COORDINATE SYSTEM AND THE NATIONAL GEODETIC SURVEY (NAD83). ALL ELEVATION IS US FEET, REFERENCED TO THE NORTH AMERICA VERTICAL DATUM OF 1988 (NAVD88).
3. THE LOCATIONS OF EXISTING UNDERGROUND UTILITIES ARE SHOWN IN AN APPROXIMATE WAY ONLY AND HAVE NOT BEEN INDEPENDENTLY VERIFIED BY THE OWNER OR ITS REPRESENTATIVE. THE CONTRACTOR SHALL DETERMINE THE EXACT LOCATION OF ALL EXISTING UTILITIES BEFORE COMMENCING WORK, AND SHALL BE FULLY RESPONSIBLE FOR ANY AND ALL DAMAGES WHICH MIGHT BE OCCASIONED BY THE CONTRACTOR'S FAILURE TO EXACTLY LOCATE AND PRESERVE ANY AND ALL UNDERGROUND UTILITIES.
4. DRAINAGE ELEVATIONS ARE PROVIDED FOR DESIGN PURPOSES ONLY. THE CONTRACTOR SHALL VERIFY BY TEST PIT, THE LOCATIONS OF EXISTING UTILITIES WHICH MAY CONFLICT WITH THE PROPOSED DRAINAGE DESIGN. ANY FIELD ADJUSTMENTS REQUIRED WILL BE MADE AS APPROVED OR DIRECTED BY THE ENGINEER. ONLY AFTER THE CONTRACTOR VERIFIES ELEVATIONS FOR THE CONSTRUCTABILITY OF THE DRAINAGE SYSTEM SHALL ANY STRUCTURES BE ORDERED.
5. WHERE AN EXISTING UTILITY IS FOUND TO CONFLICT WITH THE PROPOSED WORK, THE LOCATION, ELEVATION AND SIZE OF THE UTILITY SHALL BE ACCURATELY DETERMINED WITHOUT DELAY BY THE CONTRACTOR, AND THE INFORMATION FURNISHED TO THE ENGINEER FOR RESOLUTION OF THE CONFLICT.
6. THE CONTRACTOR SHALL ALTER THE MASONRY OF THE TOP SECTION OF ALL EXISTING DRAINAGE AND SEWER STRUCTURES AS NECESSARY FOR CHANGES IN GRADE, AND RESET ALL WATER AND DRAINAGE FRAMES, GRATES AND BOXES TO THE PROPOSED FINISH SURFACE GRADE. REQUIRED NEW MASONRY SHALL BE CLAY BRICK.
7. THE CONTRACTOR SHALL MAKE ALL ARRANGEMENTS FOR THE ALTERATION AND ADJUSTMENT OF GAS, ELECTRIC, TELEPHONE AND ANY OTHER PRIVATE UTILITIES BY THE UTILITY COMPANIES.
8. EXISTING UTILITY POLES WILL BE RELOCATED BY OTHERS IF REQUIRED.
9. TREES AND SHRUBS WITHIN THE LIMITS OF GRADING SHALL BE REMOVED ONLY UPON APPROVAL OF THE ENGINEER.
10. AREAS OUTSIDE THE LIMITS OF PROPOSED WORK DISTURBED BY THE CONTRACTOR'S OPERATIONS SHALL BE RESTORED BY THE CONTRACTOR TO THEIR ORIGINAL CONDITION AT NO EXPENSE TO THE OWNER.
11. THE TERM "PROPOSED" (PROP) MEANS WORK TO BE CONSTRUCTED USING NEW MATERIALS OR, WHERE APPLICABLE, RE-USING EXISTING MATERIALS IDENTIFIED AS "REMOVE AND RESET" (R&R).
12. JOINTS BETWEEN NEW ASPHALT CONCRETE ROADWAY PAVEMENT AND SAWCUT EXISTING PAVEMENT SHALL BE SEALED WITH HMA JOINT SEALER AND BACKSANDED.
13. AFTER MILLING OPERATIONS AND PRIOR TO PAVING THE SUPERPAVE INTERMEDIATE OR SURFACES COURSES THE ENGINEER SHALL EVALUATE THE MILLED SURFACE AND SHALL APPLY THE APPROPRIATE REPAIR METHOD IF REQUIRED.
14. EXISTING SIGNS WITHIN THE PROJECT LIMITS SHALL BE REMOVED AND STACKED UNLESS INDICATED OTHERWISE ON THE DRAWINGS.
15. EXISTING STATE, COUNTY, CITY, AND TOWN LOCATION LINES AND PRIVATE PROPERTY LINES HAVE BEEN ESTABLISHED FROM AVAILABLE INFORMATION AND THEIR EXACT LOCATIONS ARE NOT GUARANTEED.
16. PROPOSED BOUNDS SHALL BE PLACED BY A LICENSED PROFESSIONAL SURVEYOR. THE CONTRACTOR SHALL EXERCISE DUE CARE WHEN WORKING AROUND ALL PROPERTY BOUNDS WHICH ARE TO REMAIN. SHOULD ANY DAMAGE TO A BOUND RESULT FROM THE ACTIONS OF THE CONTRACTOR, THE CONTRACTOR SHALL HAVE THE BOUND REPLACED AND/OR REALIGNED BY A LICENSED PROFESSIONAL SURVEYOR AS DIRECTED BY THE ENGINEER AT NO ADDITIONAL COST.
17. DISPOSAL OF ALL SURPLUS MATERIAL SHALL BE AS APPROVED BY THE ENGINEER AND OWNER.
18. LATERAL DRAIN PIPES SHALL BE INSTALLED WITH A PITCH OF 0.01 FOOT PER FOOT (MINIMUM) UNLESS NOTED OTHERWISE ON THE PLANS.
19. WHEN AN EXISTING MANHOLE, HANDHOLE OR OTHER "SURFACE" TYPE STRUCTURE IS WITHIN THE PROPOSED ACCESSIBLE SURFACE, THE STRUCTURE SHALL BE CAREFULLY ADJUSTED SUCH THAT THE TOPMOST SURFACES OR THE STRUCTURE COVER SHALL BE FLUSH WITH THE CURB RAMP SURFACE.
20. DIG SAFE IS TO BE CALLED 72 HOURS PRIOR TO DIGGING.

604996_HD(LEG).DWG Plotted on 3-Aug-2020 3:05 PM

WOBURN
NEW BOSTON STREET

STATE	FED. AID PROJ. NO.	SHEET NO.	TOTAL SHEETS
MA	TBD	03	147
PROJECT FILE NO.	604996		

LEGEND & GENERAL NOTES

GENERAL SYMBOLS

EXISTING	PROPOSED	DESCRIPTION
JB	JB	JERSEY BARRIER
CB	CB	CATCH BASIN
		CATCH BASIN CURB INLET
FP	FP	FLAG POLE
GP	GP	GAS PUMP
MB	MB	MAIL BOX
		POST SQUARE
		POST CIRCULAR
WELL	WELL	WELL
EHH	EHH	ELECTRIC HANDHOLE
		FENCE GATE POST
GG	GG	GAS GATE
BHL #	BHL #	BORING HOLE
MW #	MW #	MONITORING WELL
TP #	TP #	TEST PIT
		HYDRANT
		LIGHT POLE
CO.BD.		COUNTY BOUND
		GPS POINT
		CABLE MANHOLE
		DRAINAGE MANHOLE
		ELECTRIC MANHOLE
		GAS MANHOLE
		MISC MANHOLE
		SEWER MANHOLE
		TELEPHONE MANHOLE
		WATER MANHOLE
WHB	WHB	WOBURN HIGHWAY BOUND
MON		MONUMENT
SB		STONE BOUND
TB		TOWN OR CITY BOUND
		TRAVERSE OR TRIANGULATION STATION
TPL or GUY	TPL or GUY	TROLLEY POLE OR GUY POLE
HTP		TRANSMISSION POLE
UFB	UFB	UTILITY POLE W/ FIREBOX
UPDL	UPDL	UTILITY POLE WITH DOUBLE LIGHT
ULT	ULT	UTILITY POLE W / 1 LIGHT
UPL	UPL	UTILITY POLE
		BUSH
•SIZE & TYPE		TREE
		STUMP
		SWAMP / MARSH
WG	WG	WATER GATE
PM	PM	PARKING METER
		OVERHEAD CABLE/WIRE
		CURBING
99 / 100		CONTOURS (ON-THE-GROUND SURVEY DATA)
99 / 100		CONTOURS (PHOTOGRAMMETRIC DATA)
		UNDERGROUND DRAIN PIPE (DOUBLE LINE 24 INCH AND OVER)
		UNDERGROUND ELECTRIC DUCT (DOUBLE LINE 24 INCH AND OVER)
		UNDERGROUND GAS MAIN (DOUBLE LINE 24 INCH AND OVER)
		UNDERGROUND SEWER MAIN (DOUBLE LINE 24 INCH AND OVER)
		UNDERGROUND TELEPHONE DUCT (DOUBLE LINE 24 INCH AND OVER)
		UNDERGROUND WATER MAIN (DOUBLE LINE 24 INCH AND OVER)
		BALANCED STONE WALL
		GUARD RAIL - STEEL POSTS
		GUARD RAIL - WOOD POSTS
		CHAIN LINK OR METAL FENCE
		WOOD FENCE
		EROSION CONTROL BARRIER
		TREE LINE
		SAWCUT LINE
		TOP OR BOTTOM OF SLOPE
		EDGE OF PAVEMENT
		LIMIT OF MICROMILLING AND OVERLAY
		BANK OF RIVER OR STREAM
		BORDER OF WETLAND
		50 FT WETLAND BUFFER
		100 FT WETLAND BUFFER
		150 FT WETLAND BUFFER
		200 FT RIVERFRONT BUFFER
		STATE HIGHWAY LAYOUT
		TOWN OR CITY LAYOUT
		COUNTY LAYOUT
		RAILROAD SIDELINE
		TOWN OR CITY BOUNDARY LINE
		PROPERTY LINE OR APPROXIMATE PROPERTY LINE
		EASEMENT
		LAND CLASS BOUNDARY LINE

PAVEMENT MARKINGS SYMBOLS

EXISTING	PROPOSED	DESCRIPTION
		PAVEMENT ARROW - WHITE
ONLY	ONLY	LEGEND "ONLY" - WHITE
	SL	STOP LINE
	CW	CROSSWALK
	SWEL	SOLID WHITE EDGE LINE
	SWLL	SOLID WHITE LANE LINE
	SWL	SOLID WHITE LINE
	SYEL	SOLID YELLOW EDGE LINE
	BWL	BROKEN WHITE LINE, 10' LINE W/30' SPACING
	BYL	BROKEN YELLOW LINE, 10' LINE W/30' SPACING
	DWL	DOTTED WHITE LINE, 2' LINE W/6' SPACING
	DYL	DOTTED YELLOW LINE, 2' LINE W/6' SPACING
	DWLEx	DASHED WHITE LINE EXTENSION, 2' LINE W/4' SPACING
	LDWLEx	LONG DASHED WHITE LINE EXTENSION, 3' LINE W/9' SPACING
	DYCL	DOUBLE YELLOW CENTER LINE
	SWCHL	SOLID WHITE CHANNELIZATION LINE
	SYCHL	SOLID YELLOW CHANNELIZATION LINE

TRAFFIC SYMBOLS

EXISTING	PROPOSED	DESCRIPTION
		ELECTRIC HANDHOLE 12"x24" (OR AS NOTED)
		TRAFFIC SIGNAL CONDUIT

604996_HD(LEG).DWG Plotted on 3-Aug-2020 3:05 PM

WOBURN
NEW BOSTON STREET

STATE	FED. AID PROJ. NO.	SHEET NO.	TOTAL SHEETS
MA	TBD	04	147
PROJECT FILE NO.	604996		

KEY PLAN

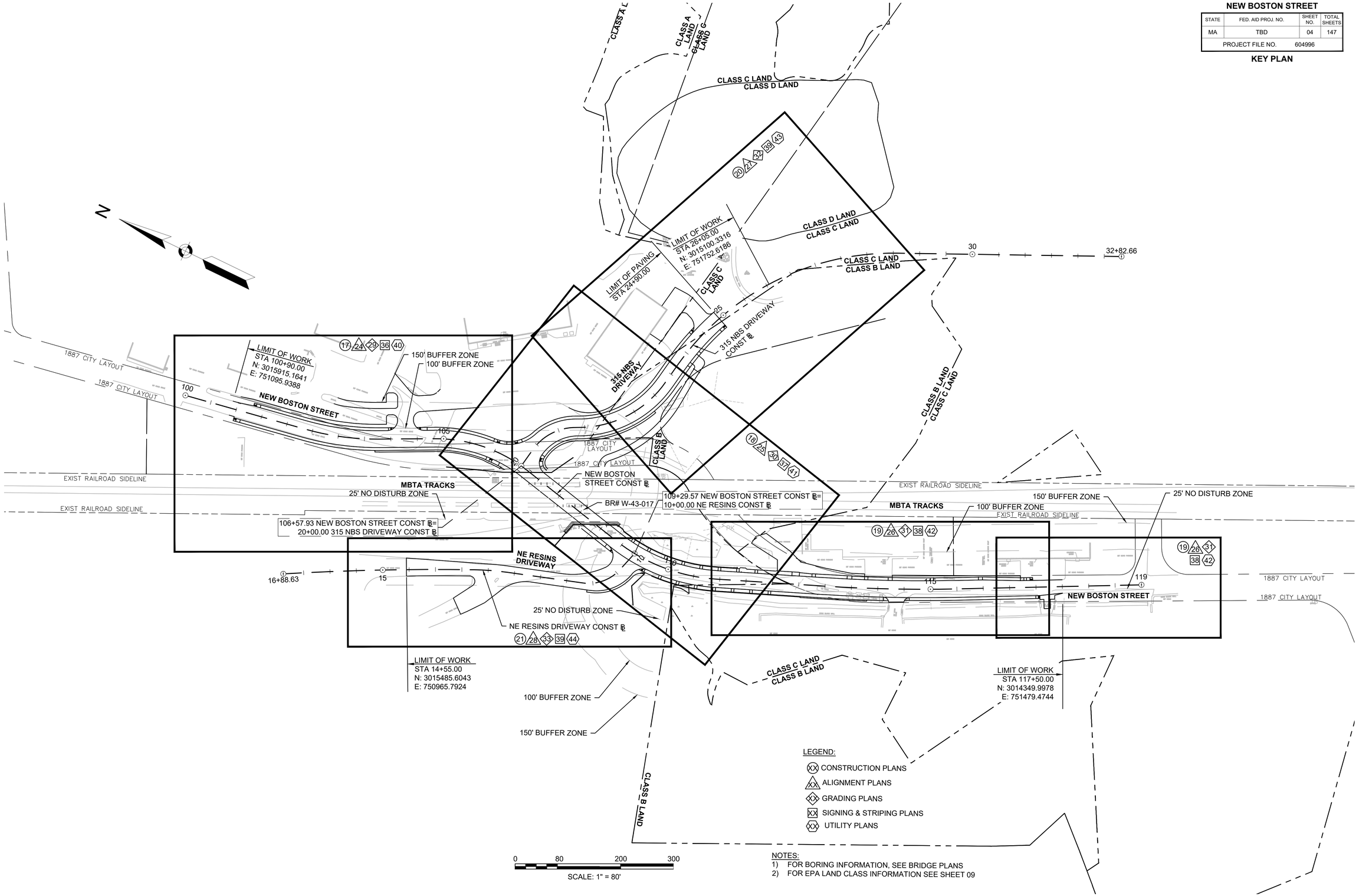

NOTES:
1) FOR BORING INFORMATION, SEE BRIDGE PLANS
2) FOR EPA LAND CLASS INFORMATION SEE SHEET 09

604996_HD(KEY).DWG Plotted on 3-Aug-2020 3:07 PM

WOBURN
NEW BOSTON STREET

STATE	FED. AID PROJ. NO.	SHEET NO.	TOTAL SHEETS
MA	TBD	05	147
PROJECT FILE NO.	604996		

EXISTING CONDITIONS PLANS

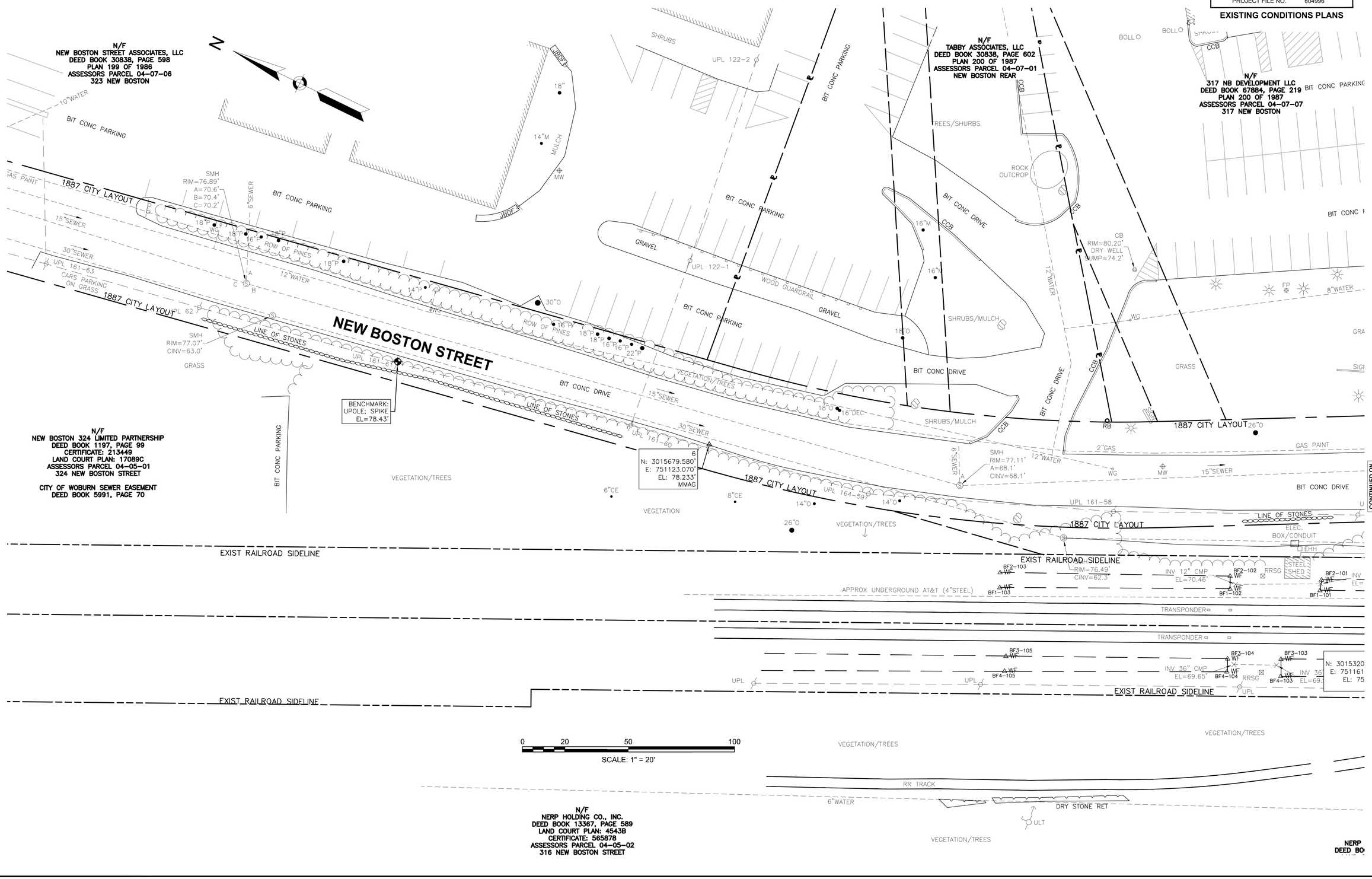

604996_HD(EXIST).DWG Plotted on 3-Aug-2020 3:08 PM

WOBURN
NEW BOSTON STREET

STATE	FED. AID PROJ. NO.	SHEET NO.	TOTAL SHEETS
MA	TBD	06	147
PROJECT FILE NO.	604996		

EXISTING CONDITIONS PLANS

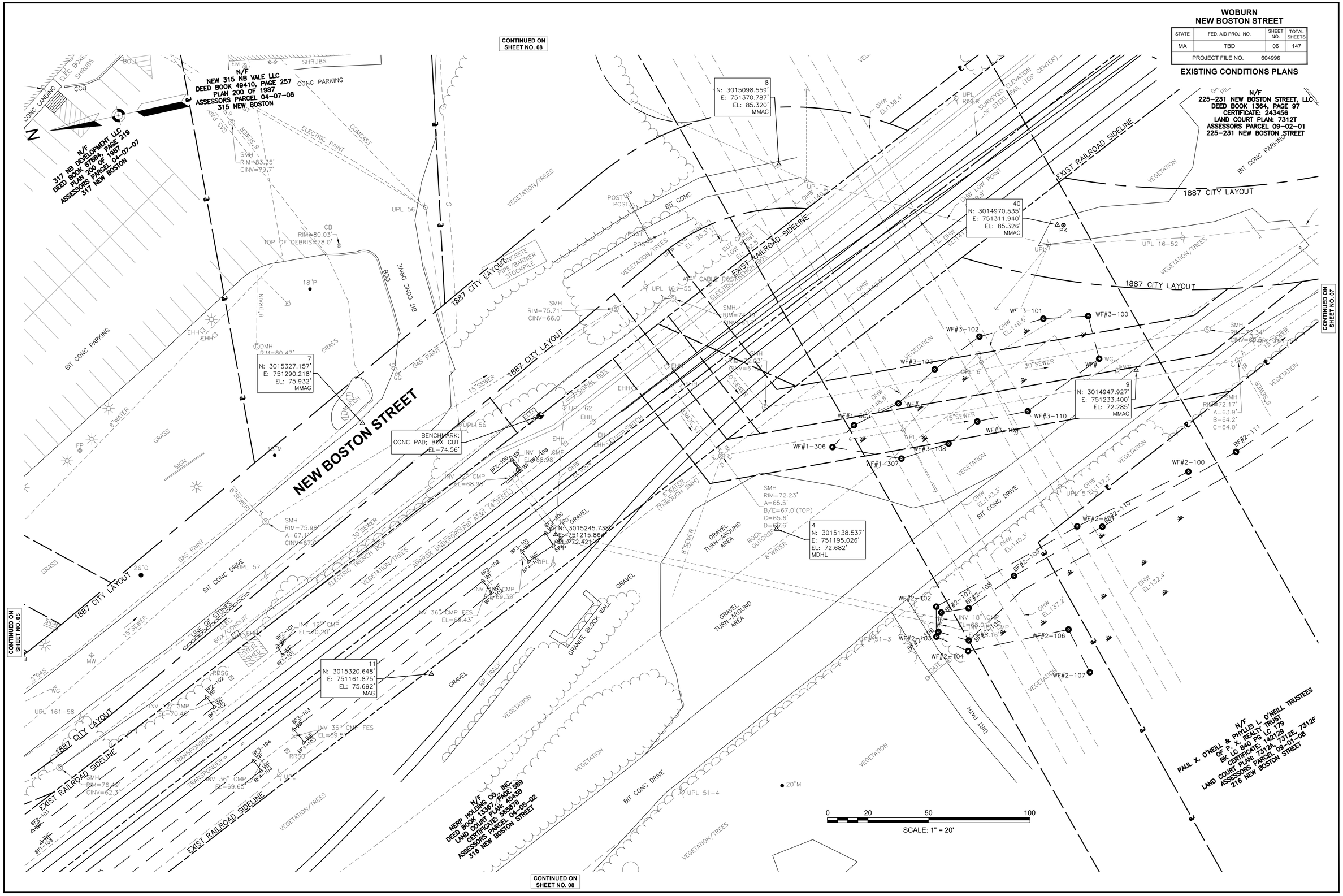

CONTINUED ON SHEET NO. 07

CONTINUED ON SHEET NO. 05

CONTINUED ON SHEET NO. 08

604996_HD(EXIST).DWG Plotted on 3-Aug-2020 3:08 PM

WOBURN
NEW BOSTON STREET

STATE	FED. AID PROJ. NO.	SHEET NO.	TOTAL SHEETS
MA	TBD	07	147
PROJECT FILE NO.	604996		

EXISTING CONDITIONS PLANS

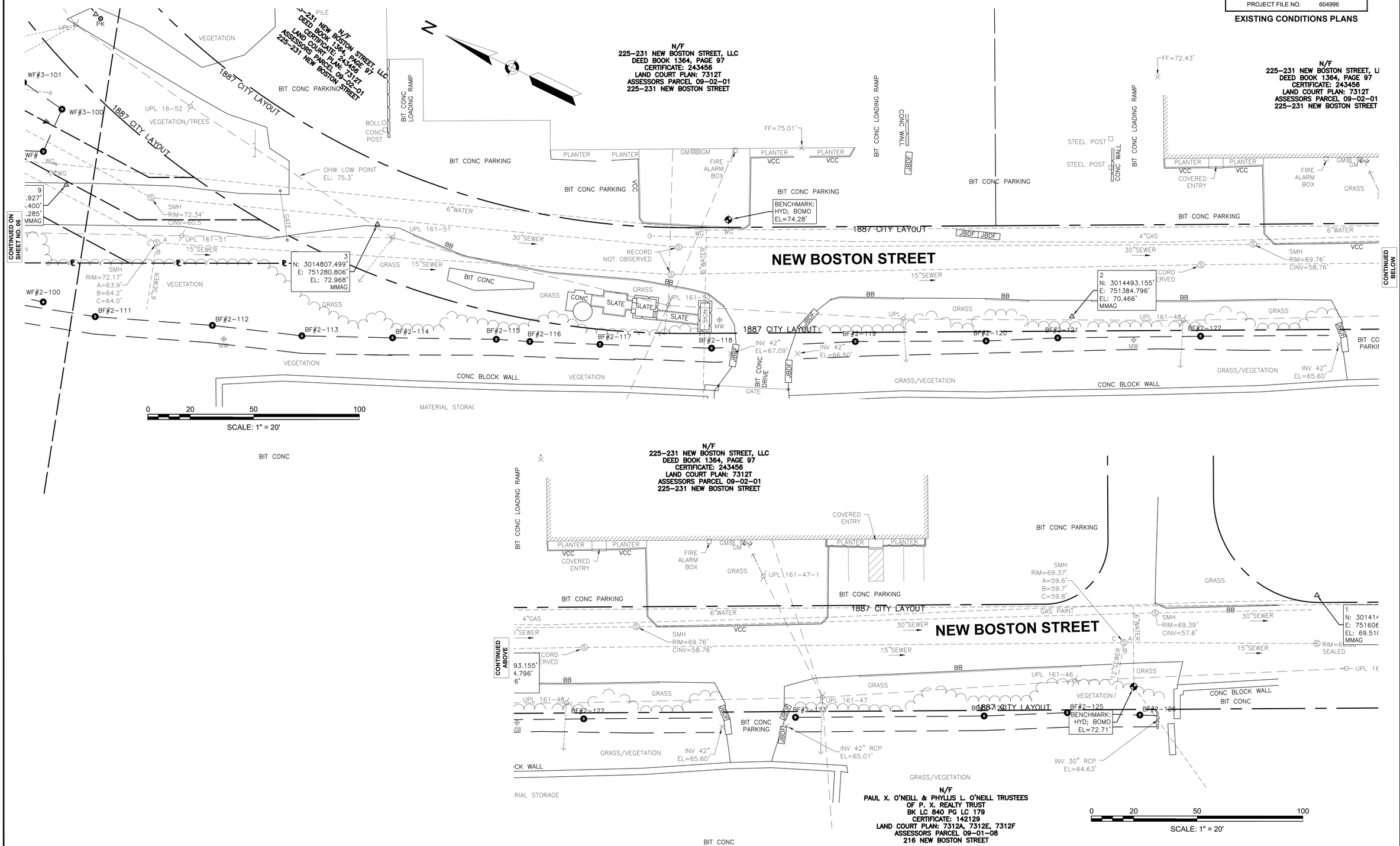

604996_HD(EXIST).DWG Plotted on 3-Aug-2020 3:08 PM

WOBURN
NEW BOSTON STREET

STATE	FED. AID PROJ. NO.	SHEET NO.	TOTAL SHEETS
MA	TBD	08	147
PROJECT FILE NO.	604996		

EXISTING CONDITIONS PLANS

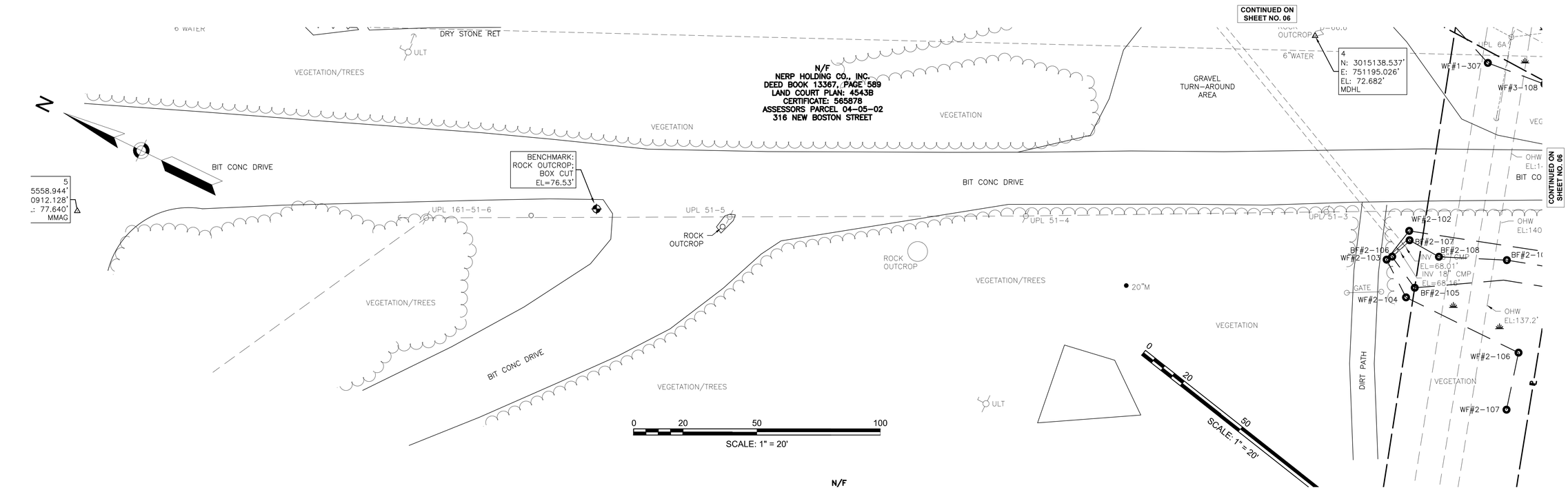

604996_HD(EXIST).DWG Plotted on 3-Aug-2020 3:08 PM

WOBURN
NEW BOSTON STREET

STATE	FED. AID PROJ. NO.	SHEET NO.	TOTAL SHEETS
MA	TBD	09	147
PROJECT FILE NO.	604996		

EPA LAND CLASS PLAN

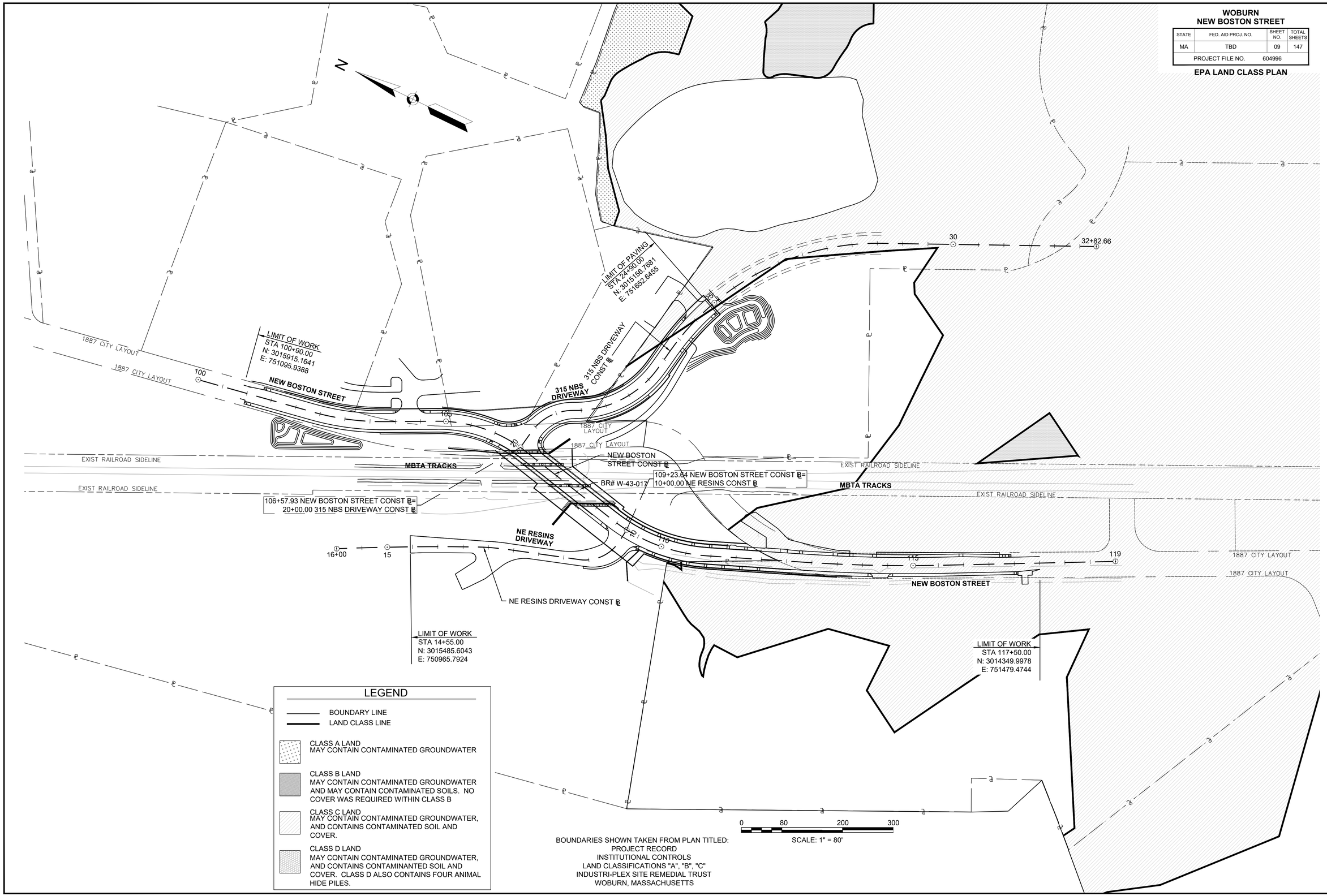

BOUNDARIES SHOWN TAKEN FROM PLAN TITLED:
PROJECT RECORD
INSTITUTIONAL CONTROLS
LAND CLASSIFICATIONS "A", "B", "C"
INDUSTRI-PLEX SITE REMEDIAL TRUST
WOBURN, MASSACHUSETTS

604996_HD(LAND_CLASS).DWG Plotted on 3-Aug-2020 3:09 PM

WOBURN
NEW BOSTON STREET

STATE	FED. AID PROJ. NO.	SHEET NO.	TOTAL SHEETS
MASS.	TBD	10	147
PROJECT FILE NO. 604996			

EPA EXISTING LAND COVER PLANS

LEGEND

	PAVED EQUIVALENT COVER		CONCRETE EQUIVALENT COVER
	AT GRADE ENGINEERED PERMEABLE COVER		ABOVE GRADE ENGINEERED PERMEABLE COVER
	AT GRADE ENGINEERED ASPHALT COVER		LIMITS OF RIP RAP = 6" STONE (DRAINAGE SWALE / COBBLE LINED) ENGINEERED COVER
	GRAVEL ROAD		

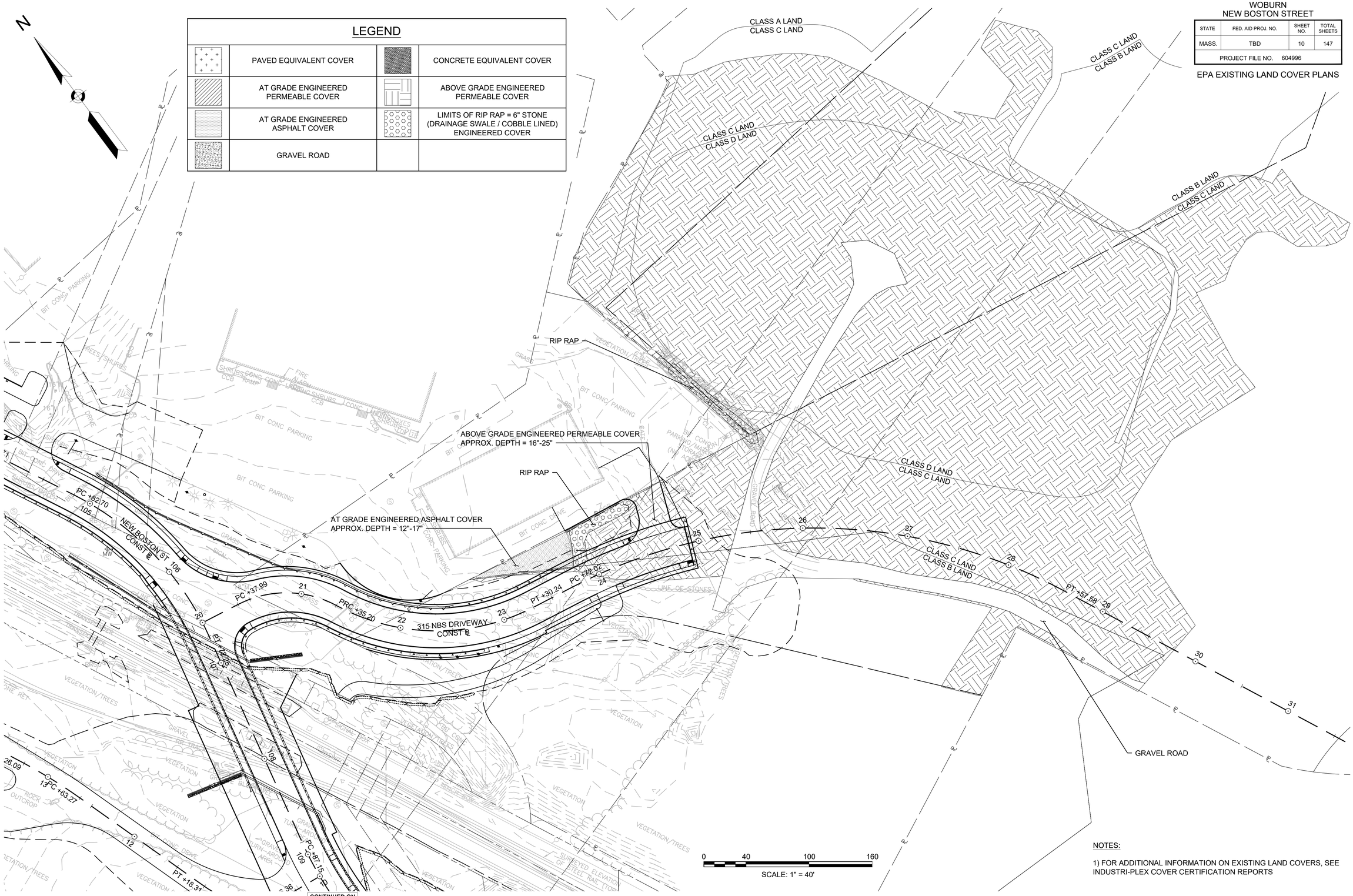

CONTINUED ON SHEET NO. 11

NOTES:

1) FOR ADDITIONAL INFORMATION ON EXISTING LAND COVERS, SEE INDUSTRI-PLEX COVER CERTIFICATION REPORTS

604996_HD(EPA-EXCOVER).DWG Plotted on 3-Aug-2020 3:10 PM

WOBURN
NEW BOSTON STREET

STATE	FED. AID PROJ. NO.	SHEET NO.	TOTAL SHEETS
MASS.	TBD	11	147
PROJECT FILE NO. 604996			

EPA EXISTING LAND COVER PLANS

LEGEND

	PAVED EQUIVALENT COVER		CONCRETE EQUIVALENT COVER
	AT GRADE ENGINEERED PERMEABLE COVER		ABOVE GRADE ENGINEERED PERMEABLE COVER
	AT GRADE ENGINEERED ASPHALT COVER		LIMITS OF RIP RAP = 6" STONE (DRAINAGE SWALE / COBBLE LINED) ENGINEERED COVER
	GRAVEL ROAD		

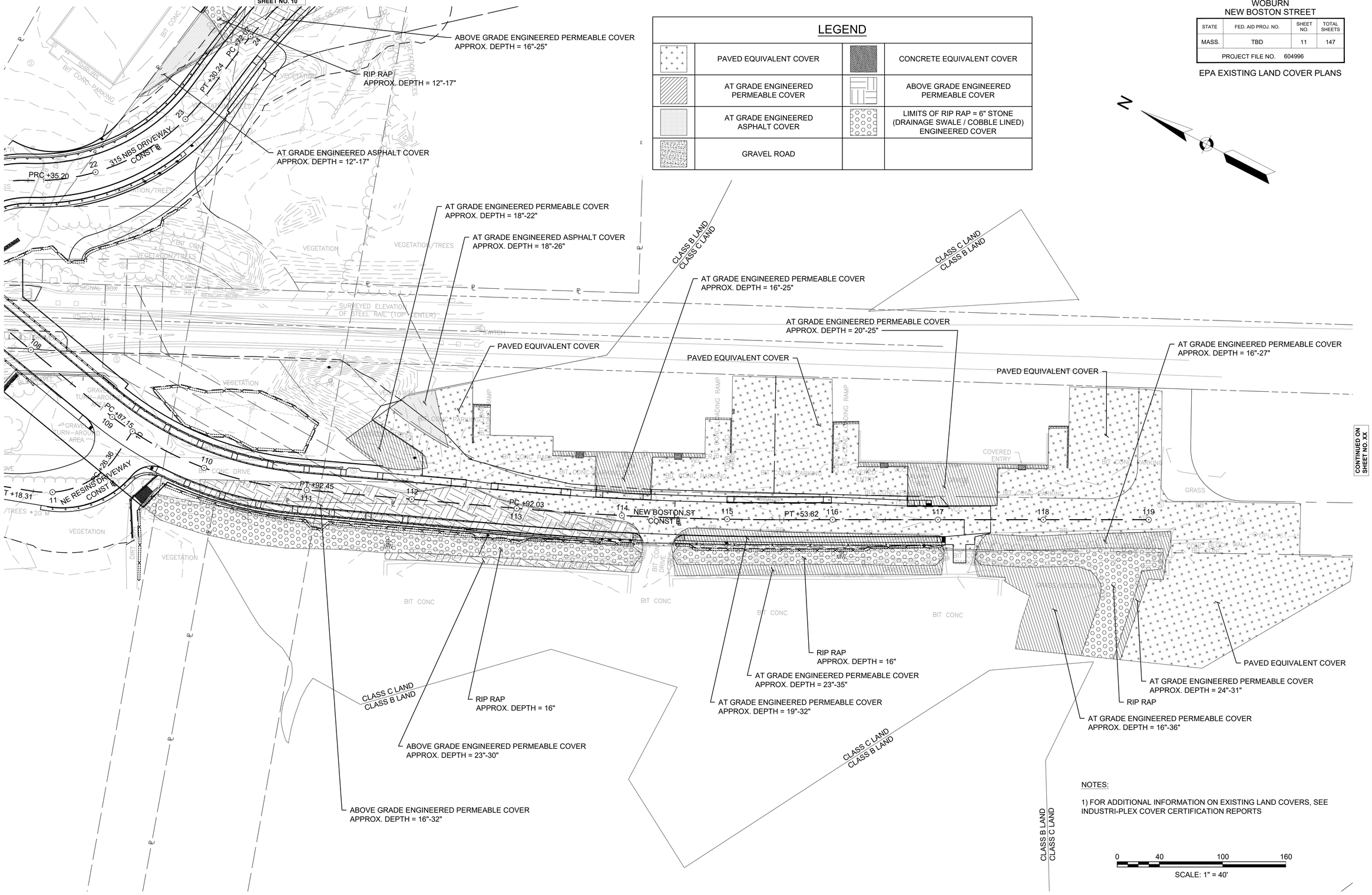

NOTES:

1) FOR ADDITIONAL INFORMATION ON EXISTING LAND COVERS, SEE INDUSTRI-PLEX COVER CERTIFICATION REPORTS

604996_HD(EPA-EXCOVER).DWG Plotted on 3-Aug-2020 3:10 PM

WOBURN
NEW BOSTON STREET

STATE	FED. AID PROJ. NO.	SHEET NO.	TOTAL SHEETS
MA	TBD	12	147
PROJECT FILE NO.	604996		

TYPICAL SECTIONS & PAVEMENT NOTES

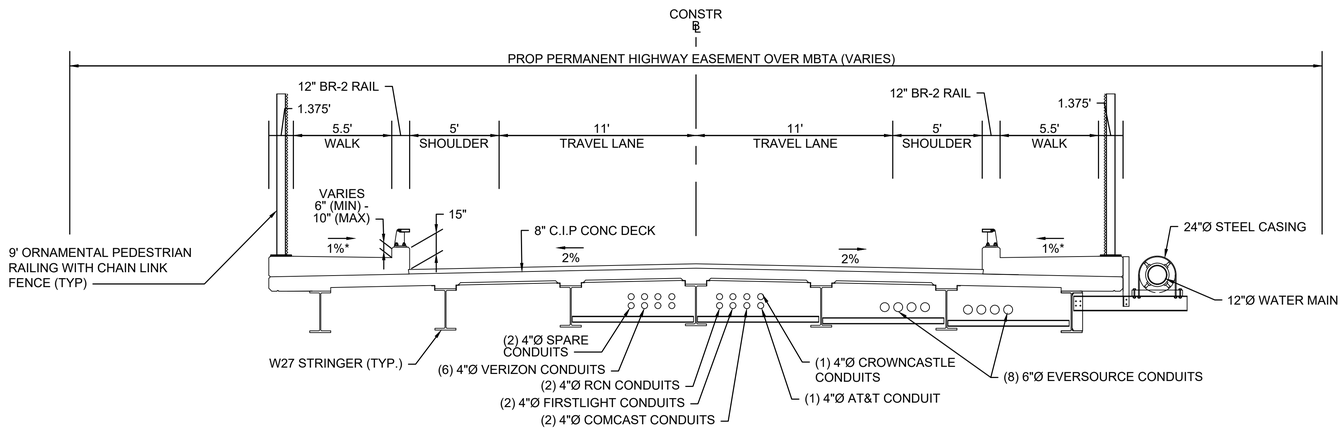

NEW BOSTON STREET
TYPICAL BRIDGE SECTION

STA 106+65 TO STA 108+65
NTS
* TOLERANCE FOR CONSTRUCTION ±0.5%

PAVEMENT NOTES

SEE SHEET 13

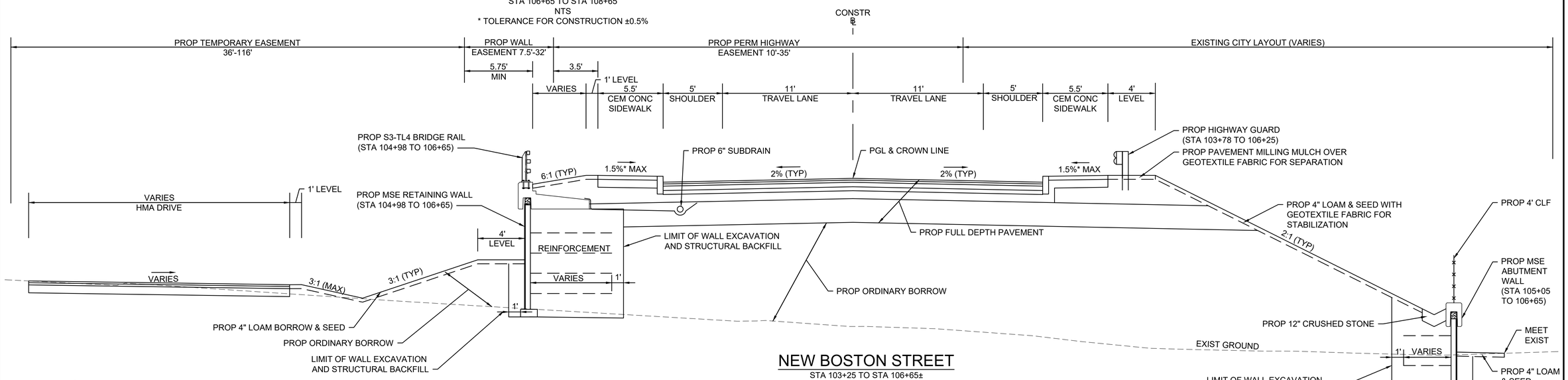

NEW BOSTON STREET

STA 103+25 TO STA 106+65±
NTS
* TOLERANCE FOR CONSTRUCTION ±0.5%

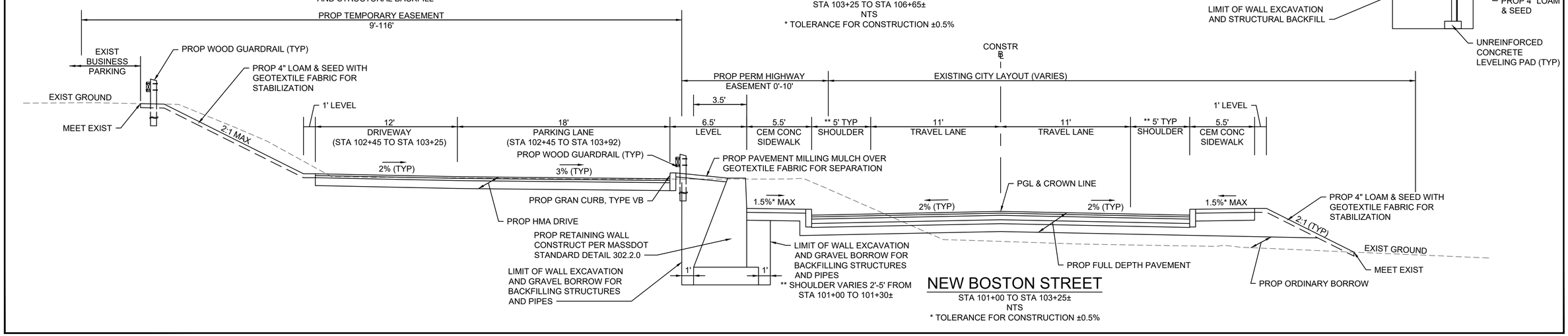

NEW BOSTON STREET

STA 101+00 TO STA 103+25±
NTS
* TOLERANCE FOR CONSTRUCTION ±0.5%

604996_HD(TYP).DWG Plotted on 3-Aug-2020 3:10 PM

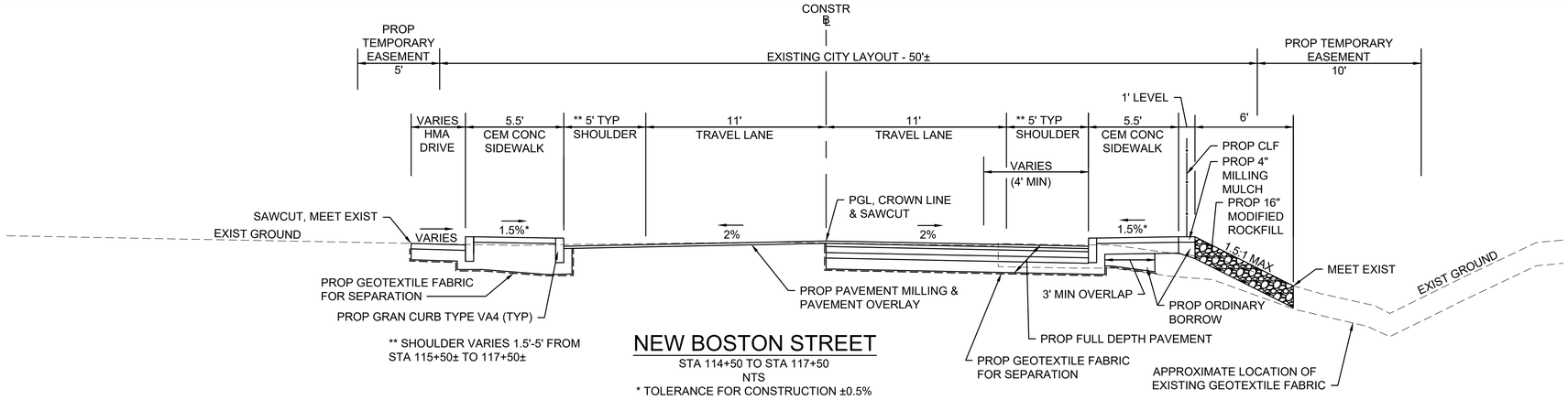

NEW BOSTON STREET

STA 114+50 TO STA 117+50
NTS
* TOLERANCE FOR CONSTRUCTION ±0.5%

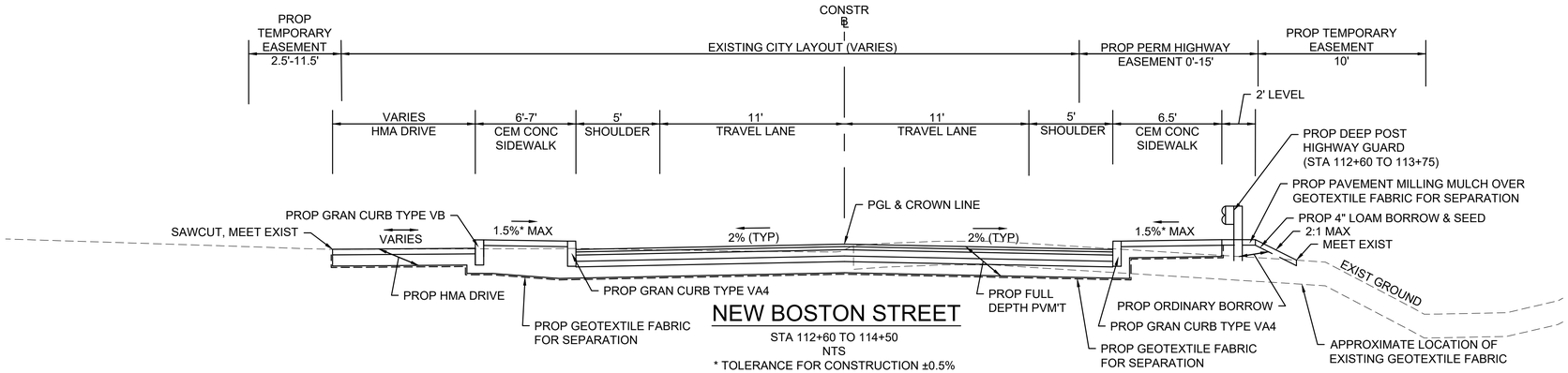

NEW BOSTON STREET

STA 112+60 TO 114+50
NTS
* TOLERANCE FOR CONSTRUCTION ±0.5%

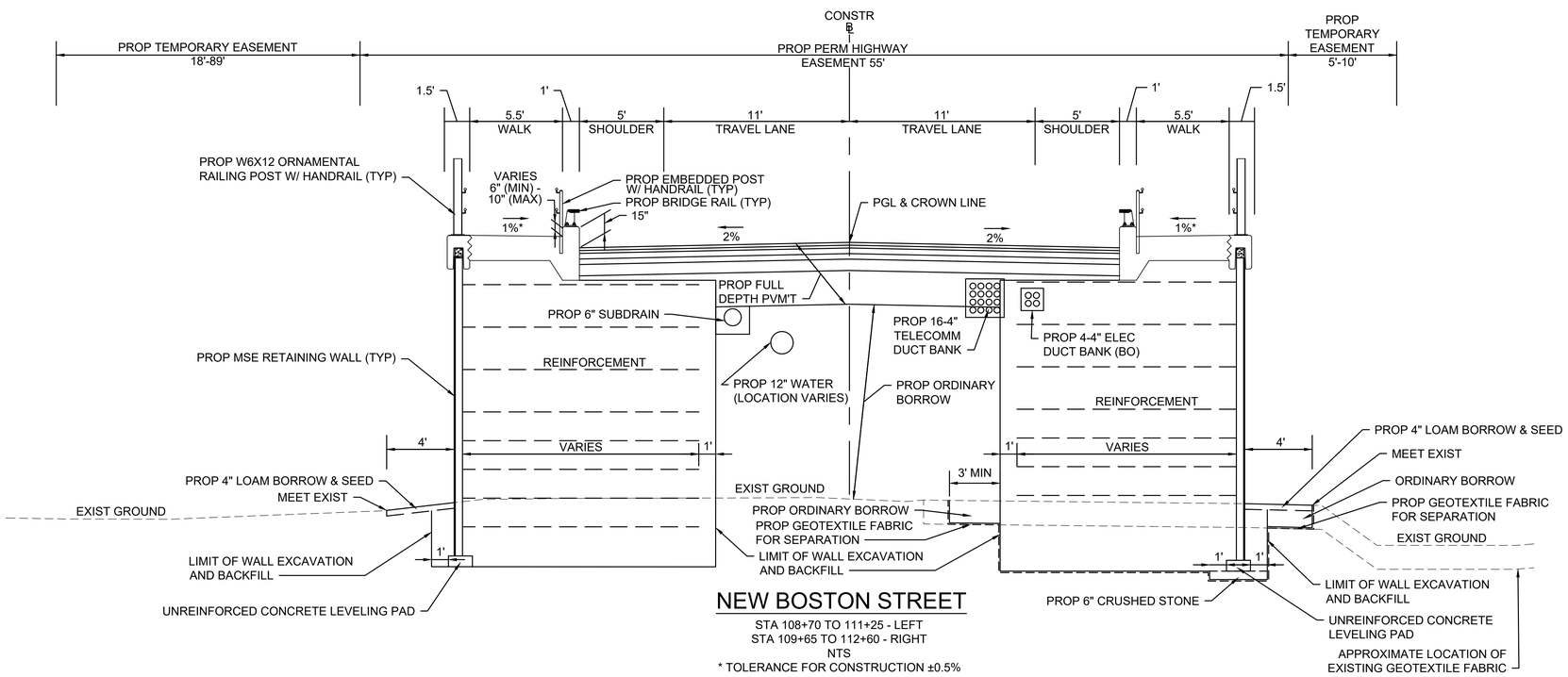

NEW BOSTON STREET

STA 108+70 TO 111+25 - LEFT
STA 109+65 TO 112+60 - RIGHT
NTS
* TOLERANCE FOR CONSTRUCTION ±0.5%

PAVEMENT NOTES

PROPOSED FULL DEPTH PAVEMENT

SURFACE: 1.75" SUPERPAVE SURFACE COURSE 12.5 (SSC-12.5) OVER 2.25" SUPERPAVE INTERMEDIATE COURSE 19.0 (SIC-19.0)

BASE: 4.5" SUPERPAVE BASE COURSE 37.5 (SBC-37.5)

SUBBASE: 4.0" DENSE GRADED CRUSHED STONE FOR SUBBASE OVER 8.0" GRAVEL BORROW, TYPE b

SUBGRADE: 24.0" SPECIAL BORROW WHERE REQUIRED

PROPOSED PAVEMENT MILLING AND PAVEMENT OVERLAY

SURFACE: 1.75" SUPERPAVE SURFACE COURSE 12.5 (SSC-12.5) OVER
1.75" MICROMILLING (TYP)

PROPOSED HOT MIX ASPHALT DRIVEWAY

SURFACE: 1.75" SUPERPAVE SURFACE COURSE 12.5 (SSC-12.5) OVER 2.25" SUPERPAVE INTERMEDIATE COURSE 19.0 (SIC-19.0)

FOUNDATION: 8.0" GRAVEL BORROW, TYPE b

PROPOSED HOT MIX ASPHALT COMMERCIAL DRIVEWAY

SURFACE: 2" SUPERPAVE SURFACE COURSE 12.5 (SSC-12.5) OVER 3" SUPERPAVE INTERMEDIATE COURSE 19.0 (SIC-19.0)

FOUNDATION: 8.0" GRAVEL BORROW, TYPE b

PROPOSED CEMENT CONCRETE WALK/WHEELCHAIR RAMP

SURFACE: 4.0" CEMENT CONCRETE AIR AIR ENTRAINED 4000 PSI, 3/4", 610

FOUNDATION: 8.0" GRAVEL BORROW, TYPE b

PROPOSED CEMENT CONCRETE DRIVEWAY

SURFACE: 6.0" CEMENT CONCRETE AIR ENTRAINED 4000 PSI, 3/4", 610 WITH 6" X 6", W2.9 X W2.9 WELDED WIRE MESH

FOUNDATION: 8.0" GRAVEL BORROW, TYPE b

PROPOSED BRIDGE PAVEMENT

SURFACE: 1.25" SUPERPAVE BRIDGE SURFACE COURSE 9.5 (SSC-B-9.5) OVER

INTERMEDIATE: 1.75" SUPERPAVE BRIDGE PROTECTIVE COURSE 12.5 (SPC-B-12.5)

GENERAL NOTES:

1. WHERE EXISTING GRAVEL IS FOUND TO BE SUITABLE, THE EXISTING GRAVEL MAY BE USED IN PROPOSED SUBBASE, AFTER APPROVAL BY THE ENGINEER.
2. ALL SUPERPAVE HOT MIX ASPHALT SHALL BE PRODUCED WITH A WARM MIX ASPHALT TECHNOLOGY. SUPERPAVE SURFACE COURSE SHALL BE POLYMER MODIFIED ASPHALT.
3. ALL HOT MIX ASPHALT PAVEMENTS SHALL BE CONSTRUCTED IN ACCORDANCE WITH SECTION 450 HOT MIX ASPHALT PAVEMENT AND SECTION M-3 ASPHALTIC MATERIALS.
4. ASPHALT EMULSION FOR TACK COAT (ITEM 452.) SHALL BE SPRAY APPLIED FOR DOUBLE OVERLAP COVERAGE AT 0.07 GALLONS PER SQUARE YARD OVER MILLED SURFACES AND 0.05 GALLONS PER SQUARE YARD OVER SMOOTH SURFACES.
5. HMA JOINT SEALANT (ITEM 453.) SHALL BE APPLIED IN SURFACE COURSE AT ALL VERTICAL COLD JOINTS PRIOR TO PAVING.
6. THE PERFORMANCE GRADE ASPHALT BINDER USED FOR ALL SUPERPAVE HMA MIXTURES EXCEPT SUPERPAVE BASE COURSE 37.5 (SBC-37.5) FOR THIS CONTRACT IS A PG 64-28 GRADE V (PG64V-28). THE PERFORMANCE GRADE FOR ALL SUPERPAVE BASE COURSE 37.5 (SBC-37.5) HMA MIXTURES FOR THIS CONTRACT IS A PG 64-28 GRADE S (PG64S-28).
7. SURFACE PAVING TO BE COMPLETED AT THE END OF THE PROJECT AND AS DIRECTED WHEN IT CAN BE PLACED IN ITS ENTIRETY.

604996_HD(TYP).DWG Plotted on 3-Aug-2020 3:10 PM

604996_HD(TYP).DWG Plotted on 3-Aug-2020 3:10 PM

PAVEMENT NOTES

SEE SHEET 13

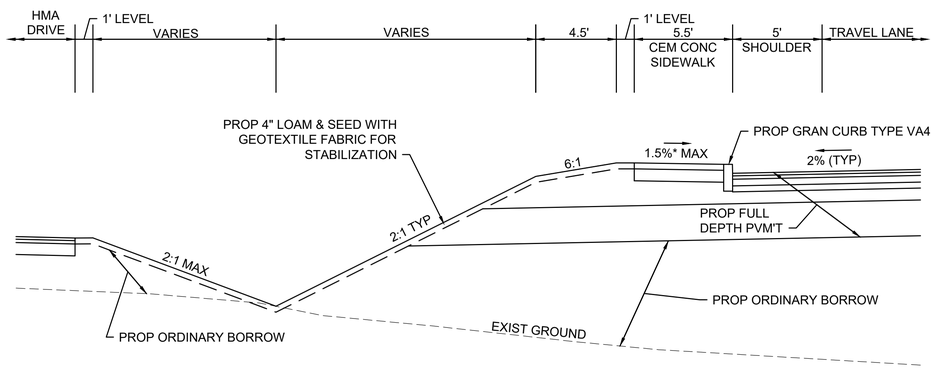

NEW BOSTON STREET
SLOPE CHANGE ON LEFT
STA 104+50 TO STA 104+95 - LEFT
NTS
* TOLERANCE FOR CONSTRUCTION ±0.5%

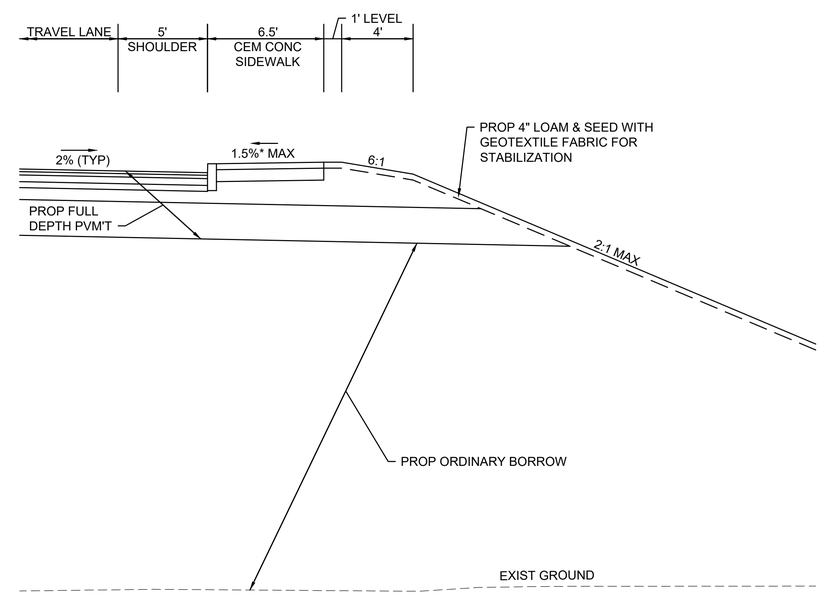

NEW BOSTON STREET
SLOPE CHANGE ON RIGHT
STA 108+25 TO STA 108+90 - RIGHT
NTS
* TOLERANCE FOR CONSTRUCTION ±0.5%

604996_HD(TYP).DWG Plotted on 3-Aug-2020 3:10 PM

PAVEMENT NOTES

SEE SHEET 13

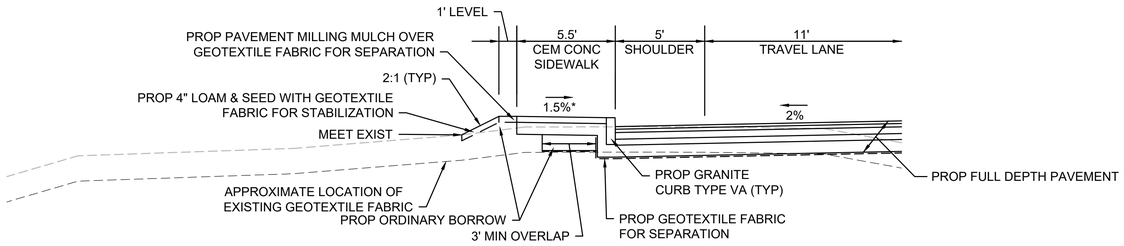

315 NBS DRIVEWAY
LAND COVER IMPACT ON LEFT

STA 24+10 TO STA 24+50
NTS
* TOLERANCE FOR CONSTRUCTION ±0.5%

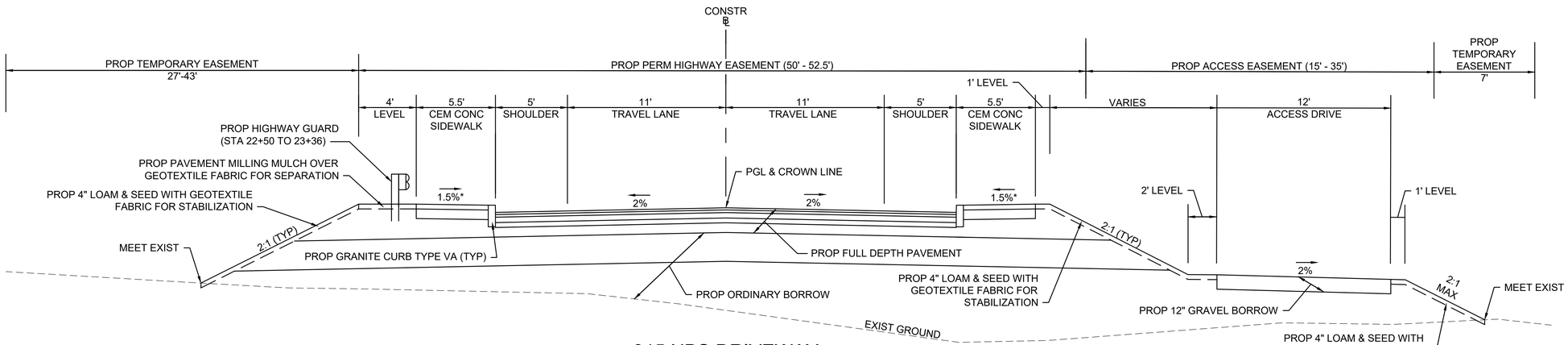

315 NBS DRIVEWAY

STA 22+75 TO STA 24+10
NTS
* TOLERANCE FOR CONSTRUCTION ±0.5%

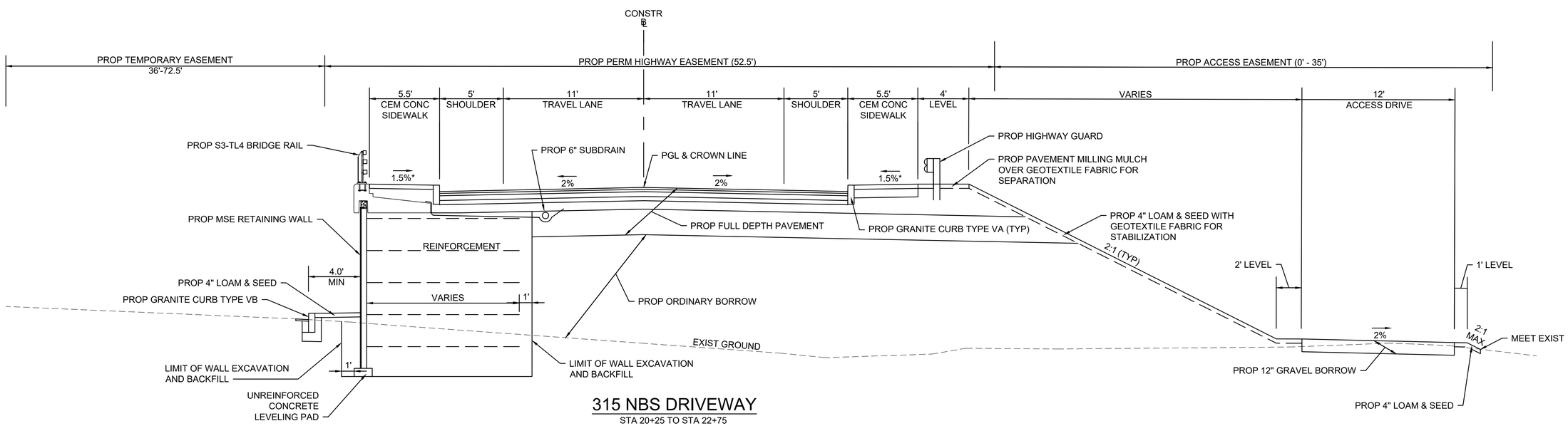

315 NBS DRIVEWAY

STA 20+25 TO STA 22+75
NTS
* TOLERANCE FOR CONSTRUCTION ±0.5%

604996_HD(TYP).DWG Plotted on 3-Aug-2020 3:10 PM

PAVEMENT NOTES

SEE SHEET 13

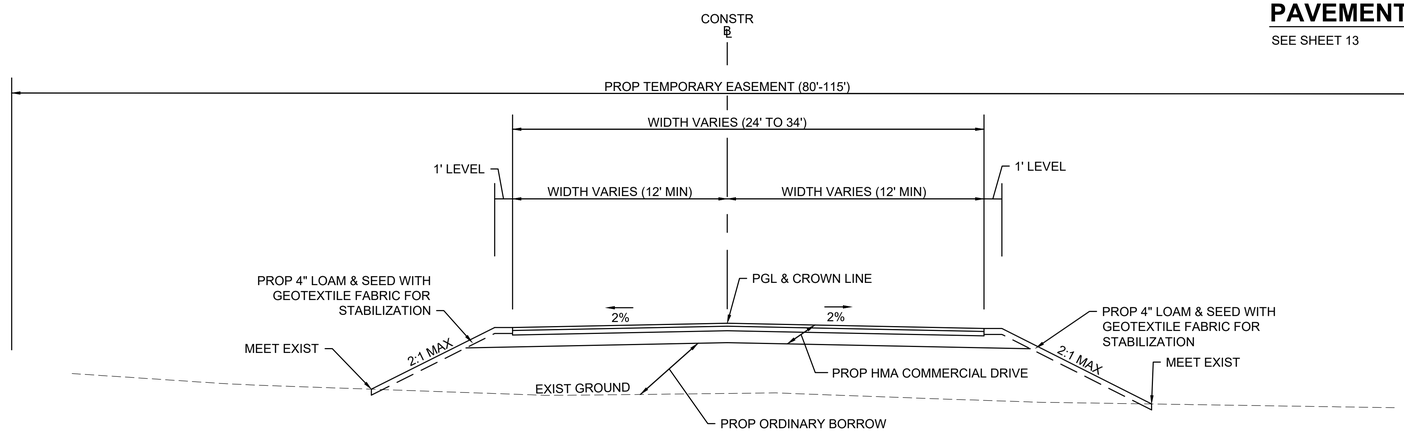

NEW ENGLAND RESINS DRIVEWAY

STA 13+30 TO STA 14+55
NTS
* TOLERANCE FOR CONSTRUCTION ±0.5%

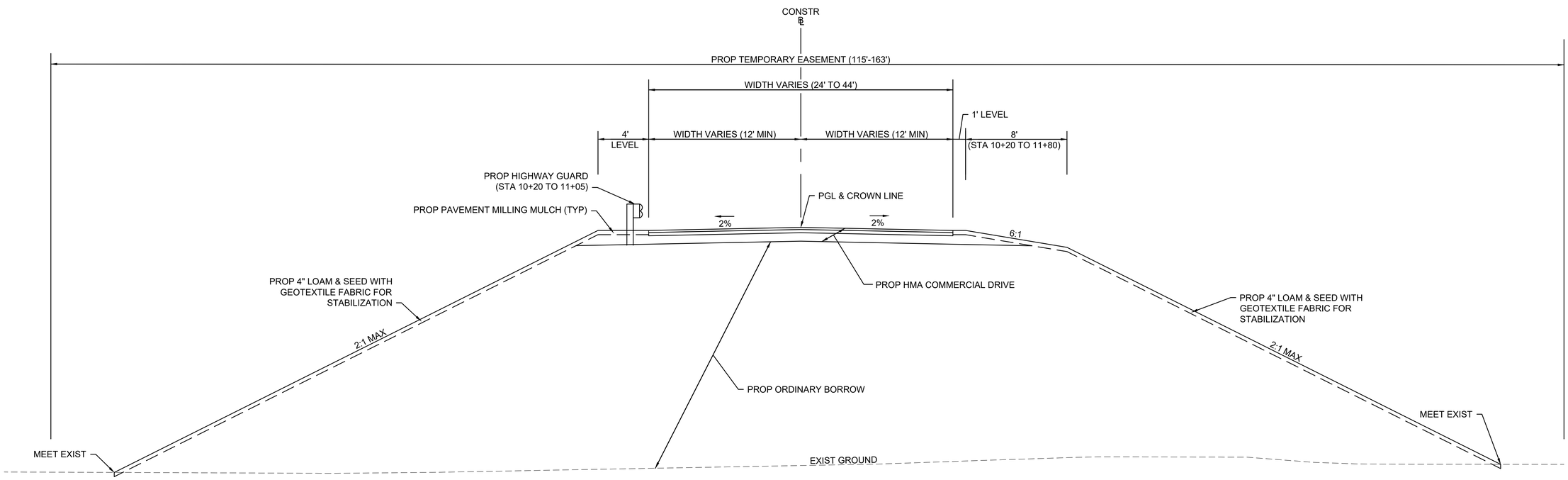

NEW ENGLAND RESINS DRIVEWAY

STA 10+20 TO STA 12+15
NTS
* TOLERANCE FOR CONSTRUCTION ±0.5%

HIGHWAY GUARD DETAILS

NEW BOSTON STREET

TANGENT END TREATMENT,TL-2	STA 103+78 TO STA 104+16 RT
HWY GUARD, TL-2 (SINGLE FACED)	STA 104+16 TO STA 105+93 RT (177 FT)
TRANSITION TO BRIDGE RAIL	STA 105+93 TO STA 106+27 RT

TRAFFIC SIGNAL CONDUIT

NONE

WATER SUPPLY ALTERATIONS

SEE SHEET NO. 40

DRAINAGE DETAILS

SEE SHEET NO. 40

WOBURN
NEW BOSTON STREET

STATE	FED. AID PROJ. NO.	SHEET NO.	TOTAL SHEETS
MA	TBD	17	147
PROJECT FILE NO.	604996		

CONSTRUCTION PLANS

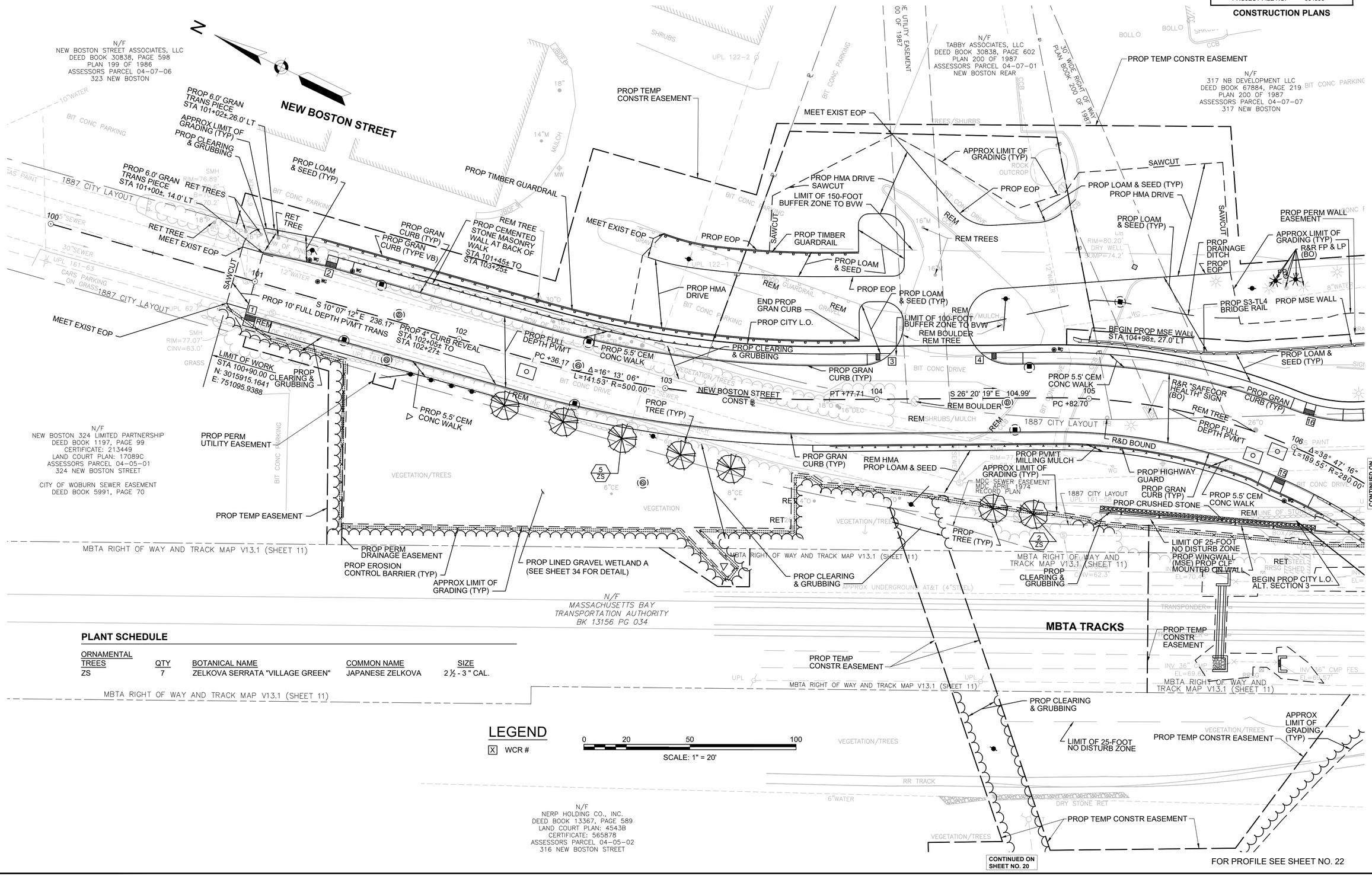

PLANT SCHEDULE

ORNAMENTAL TREES	QTY	BOTANICAL NAME	COMMON NAME	SIZE
ZS	7	ZELKOVA SERRATA "VILLAGE GREEN"	JAPANESE ZELKOVA	2 ½ - 3 " CAL.

LEGEND

[X] WCR #

0 20 50 100

SCALE: 1" = 20'

604996_HD(GEN).DWG Plotted on 3-Aug-2020 10:06 PM

HIGHWAY GUARD DETAILS

NEW BOSTON STREET
SEE SHEET 17

315 NBS DRIVE
TRANSITION TO BRIDGE RAIL — STA 20+21 TO STA 20+55 RT
HWY GUARD, TL-2 (SINGLE FACED)
CURVED SECTION, R=74.5' — STA 20+55 TO STA 21+38 RT (83 FT)
STRAIGHT SECTION — STA 21+38 TO STA 22+65 RT (127 FT)
TRAILING ANCHORAGE — STA 22+65 TO STA 22+75 RT

NEW RESINS DRIVEWAY
TRANSITION TO BRIDGE RAIL — STA 10+17 TO STA 10+51 LT
HWY GUARD, TL-2 (SINGLE FACED)
CURVED SECTION, R=87.5 — STA 10+51 TO STA 10+68 LT (17 FT)
TANGENT END TREATMENT,TL-2 — STA 10+68 TO 11+06 LT

TRAFFIC SIGNAL CONDUIT

NONE

WATER SUPPLY ALTERATIONS

SEE SHEET NO. 41

DRAINAGE DETAILS

SEE SHEET NO. 41

WOBURN
NEW BOSTON STREET

STATE	FED. AID PROJ. NO.	SHEET NO.	TOTAL SHEETS
MA	TBD	18	147
PROJECT FILE NO.	604996		

CONSTRUCTION PLANS

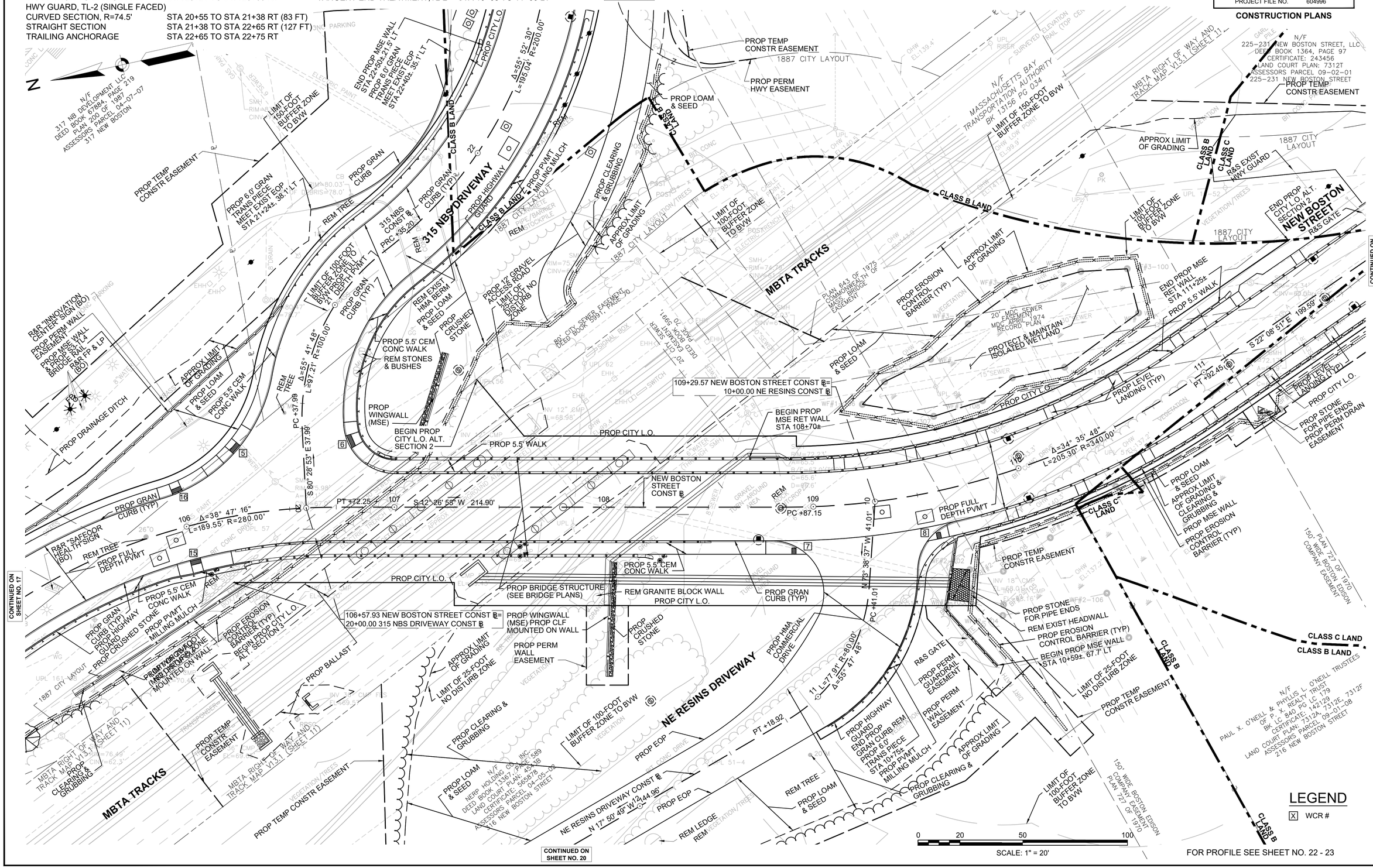

FOR PROFILE SEE SHEET NO. 22 - 23

604996_HDGEN.DWG Plotted on 3-Aug-2020 3:12 PM

HIGHWAY GUARD DETAILS

NEW BOSTON STREET
TRANSITION TO BRIDGE RAIL
HWY GUARD, TL-2 (SINGLE FACED)
TRAILING ANCHORAGE

STA 112+60 TO STA 112+94 RT
STA 112+94 TO STA 113+64 RT (70 FT)
STA 113+64 TO STA 113+74 RT

TRAFFIC SIGNAL CONDUIT

NONE

WATER SUPPLY ALTERATIONS

SEE SHEET NO. 42

DRAINAGE DETAILS

SEE SHEET NO. 42

WOBURN
NEW BOSTON STREET

STATE	FED. AID PROJ. NO.	SHEET NO.	TOTAL SHEETS
MA	TBD	19	147
PROJECT FILE NO.	604996		

CONSTRUCTION PLANS

604996_HD(GEN).DWG Plotted on 3-Aug-2020 3:12 PM

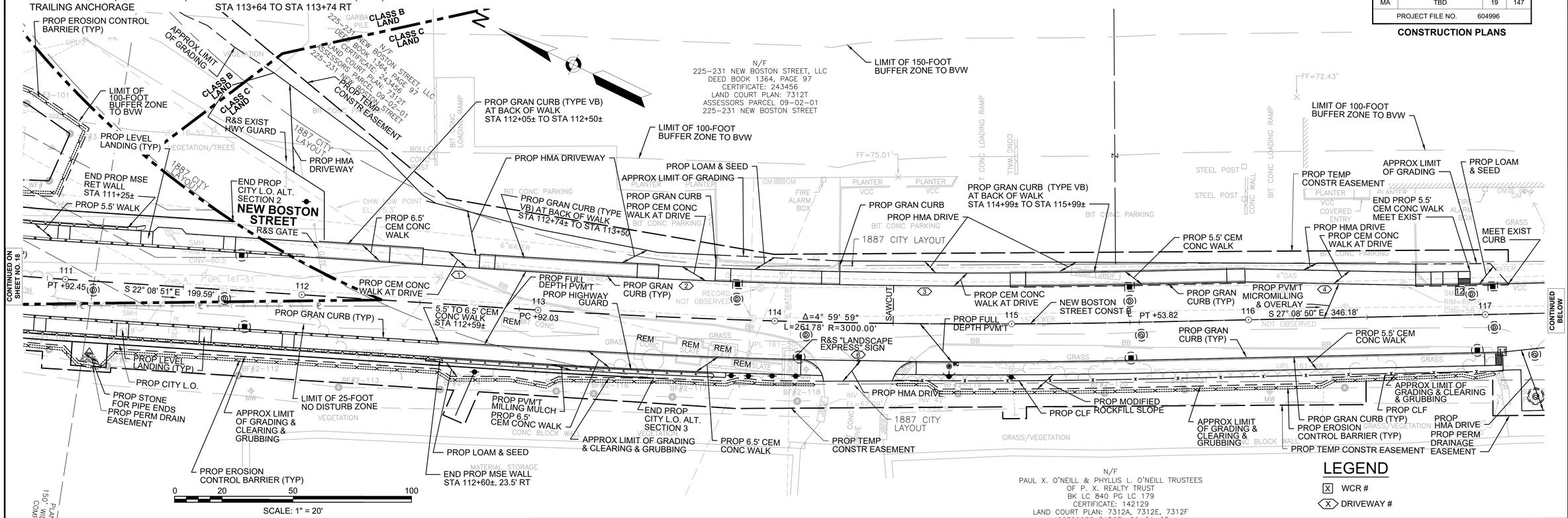

LEGEND

[X] WCR #

⟨X⟩ DRIVEWAY #

FOR PROFILE SEE SHEET NO. 22

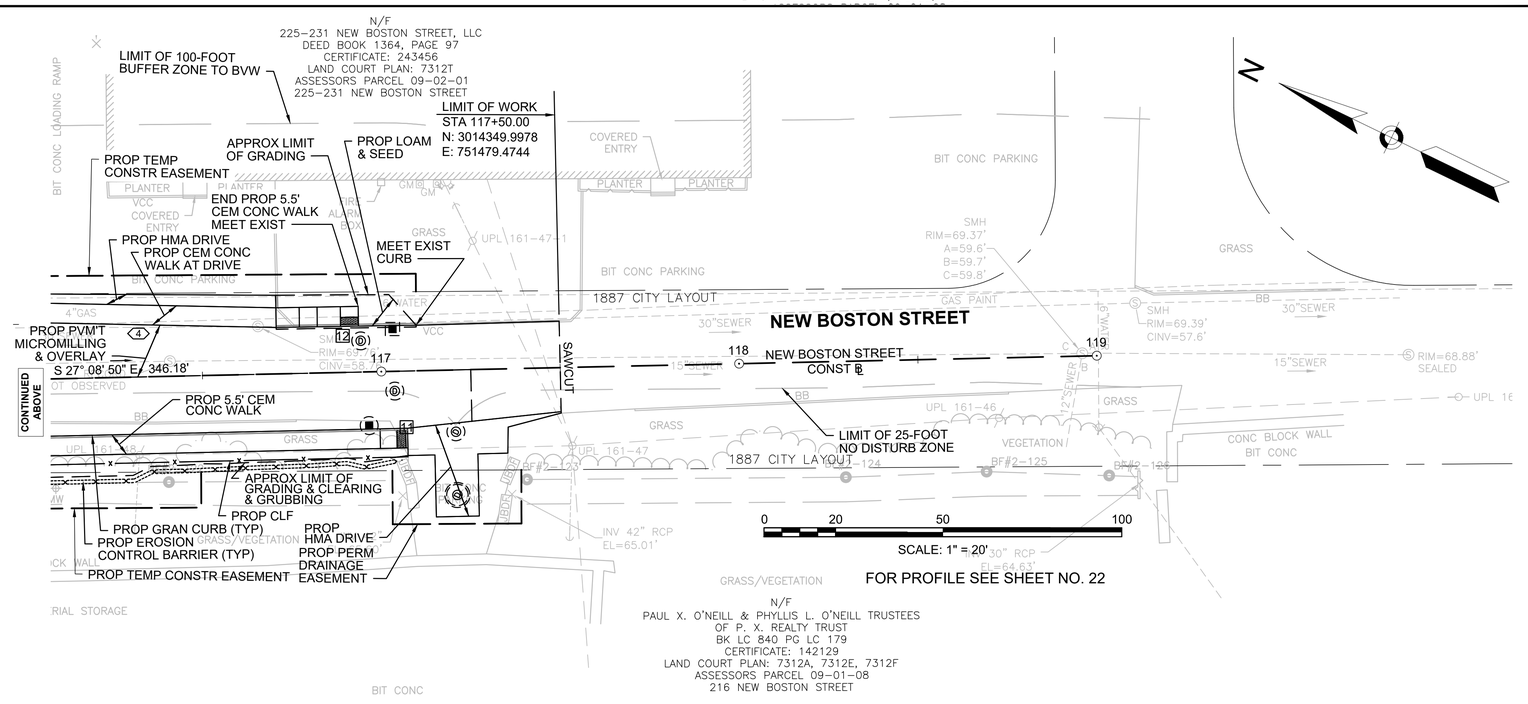

HIGHWAY GUARD DETAILS

315 NBS DRIVE
SEE SHEET 18

TRANSITION TO BRIDGE RAIL	STA 22+50 TO STA 22+84 LT
HWY GUARD, TL-2 (SINGLE FACED)	STA 22+84 TO STA 22+98 LT (14 FT)
TANGENT END TREATMENT, TL-2	STA 23+30 TO STA 23+68 LT
TRAILING ANCHORAGE	STA 24+90,20.6' LT TO STA 24+90,10.6' LT
HWY GUARD, TL-2 (SINGLE FACED)	STA 24+90,10.6' LT TO STA 24+90,10.5' RT (21 FT)
TRAILING ANCHORAGE	STA 24+90,10.5' RT TO STA 24+90,20.5'RT

TRAFFIC SIGNAL CONDUIT

NONE

WATER SUPPLY ALTERATIONS

SEE SHEET NO. 43

DRAINAGE DETAILS

SEE SHEET NO. 43

WOBURN
NEW BOSTON STREET

STATE	FED. AID PROJ. NO.	SHEET NO.	TOTAL SHEETS
MA	TBD	20	147
PROJECT FILE NO.	604996		

CONSTRUCTION PLANS

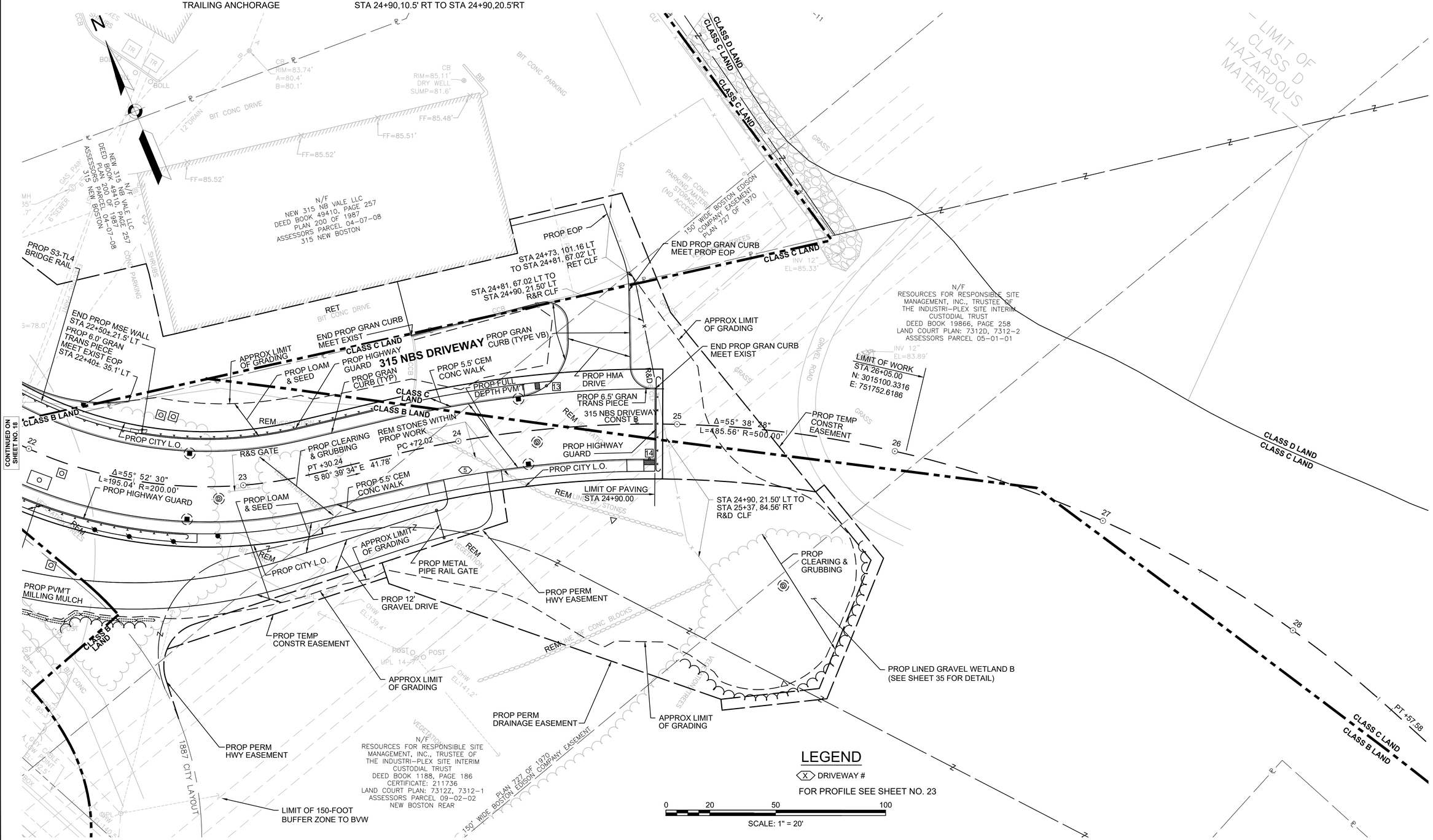

604996_HD(GEN).DWG Plotted on 3-Aug-2020 3:12 PM

HIGHWAY GUARD DETAILS
NE RESINS DRIVEWAY
SEE SHEET 18

TRAFFIC SIGNAL CONDUIT
NONE

WATER SUPPLY ALTERATIONS
SEE SHEET NO. 43

DRAINAGE DETAILS
SEE SHEET NO. 43

WOBURN
NEW BOSTON STREET

STATE	FED. AID PROJ. NO.	SHEET NO.	TOTAL SHEETS
MA	TBD	21	147
PROJECT FILE NO.	604996		

CONSTRUCTION PLANS

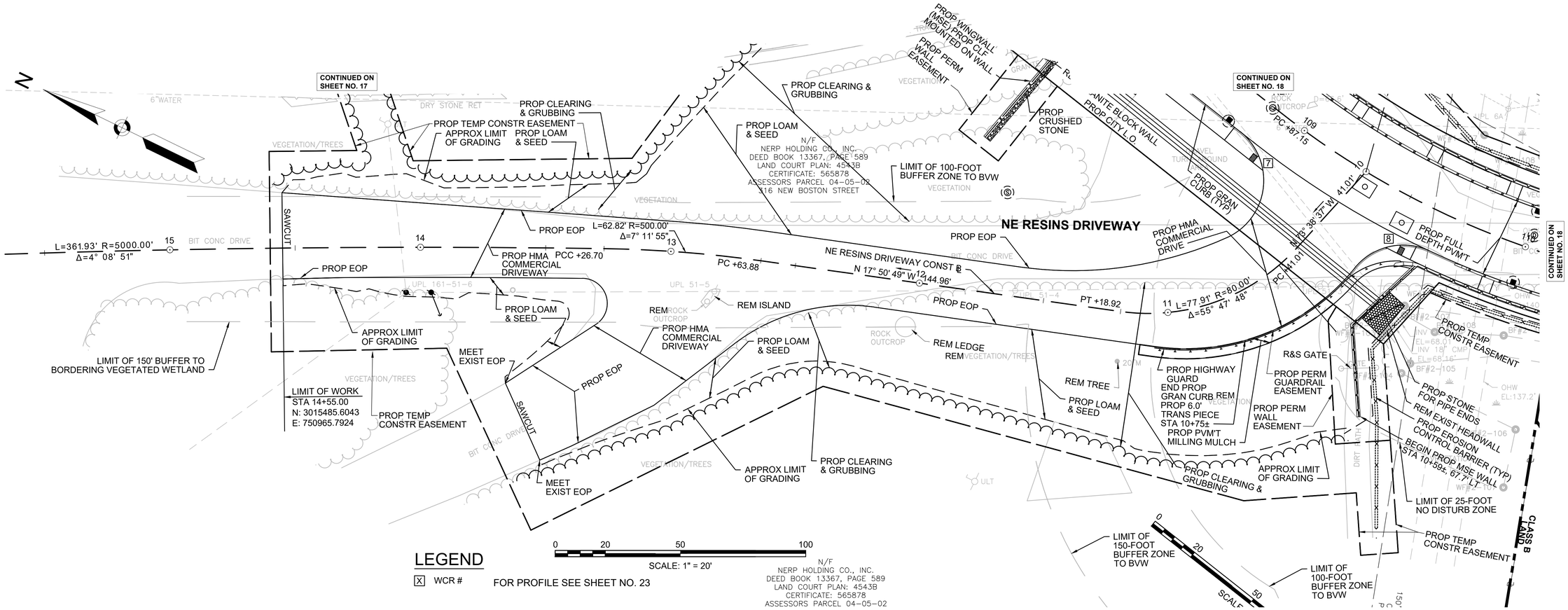

LEGEND

[X] WCR #

FOR PROFILE SEE SHEET NO. 23

604996_HD(GEN).DWG Plotted on 3-Aug-2020 3:12 PM

WOBURN
NEW BOSTON STREET

STATE	FED. AID PROJ. NO.	SHEET NO.	TOTAL SHEETS
MA	TBD	22	147
PROJECT FILE NO.	604996		

PROFILES

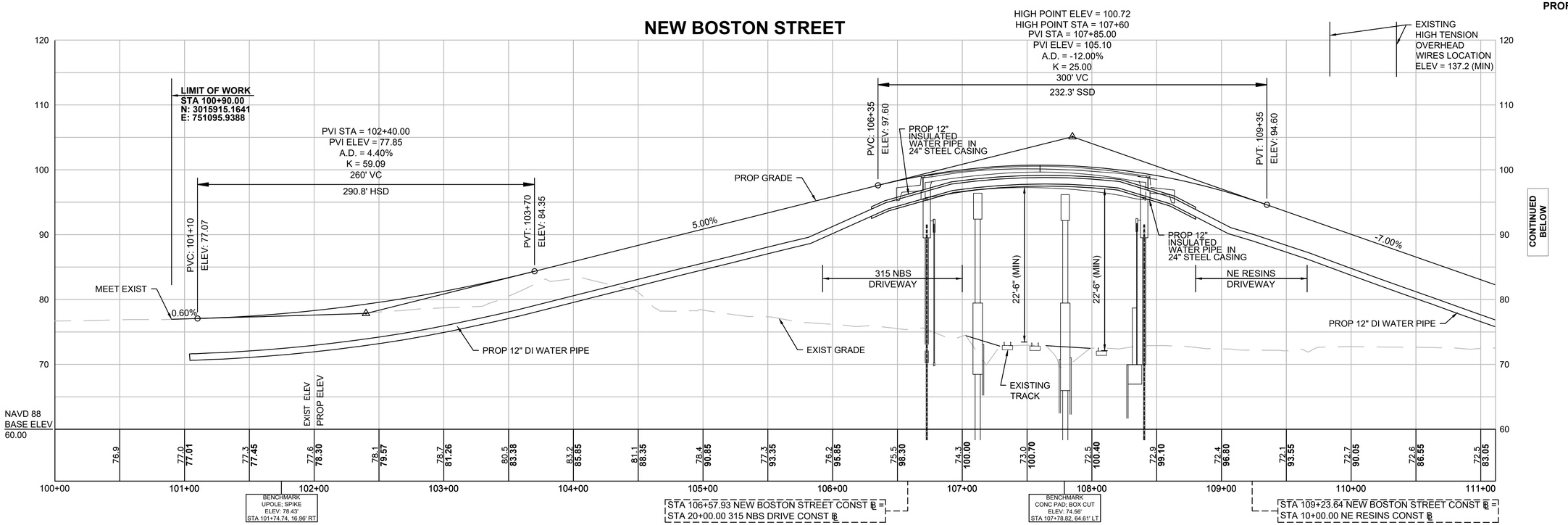

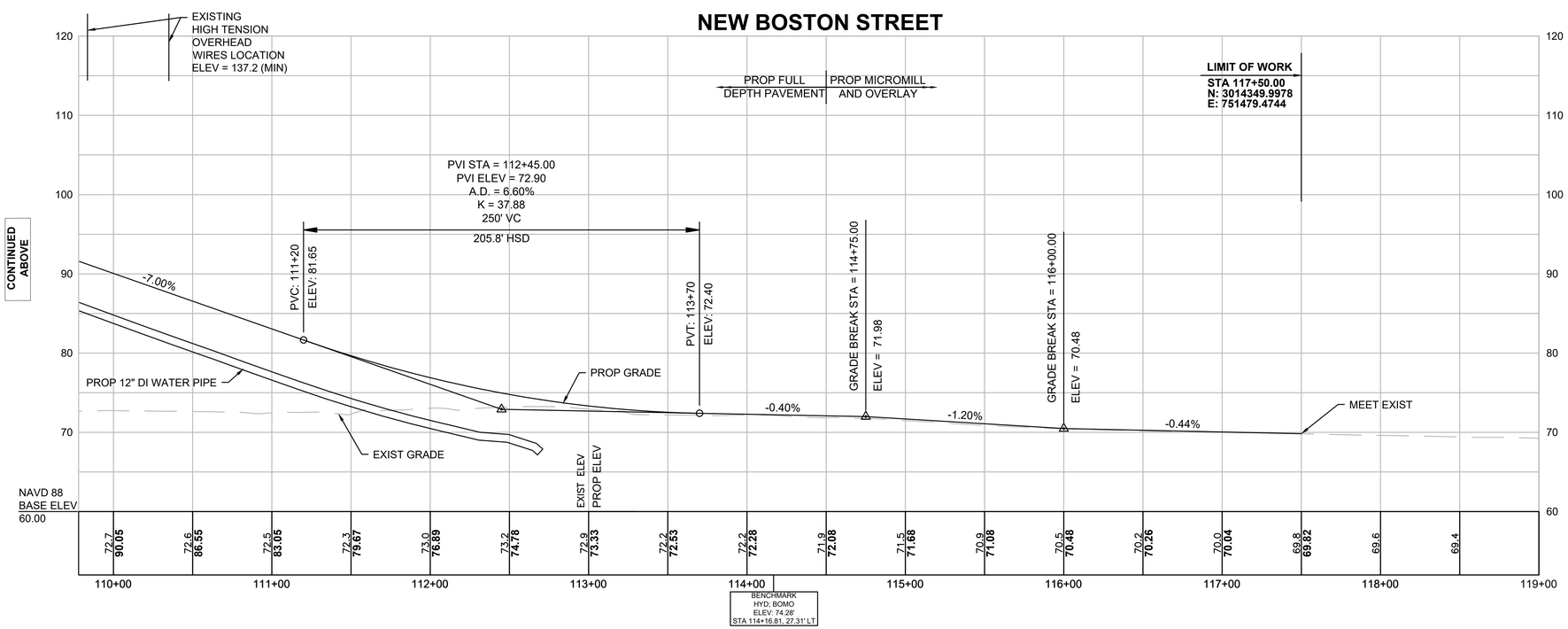

FOR CONSTRUCTION PLANS: SEE SHEET NO. 17 - 19

HOR. SCALE IN FEET
40 0 40 80
8 0 8 16
VER. SCALE IN FEET

604996 HD (PROF).DWG Plotted on 3-Aug-2020 3:13 PM

WOBURN
NEW BOSTON STREET

STATE	FED. AID PROJ. NO.	SHEET NO.	TOTAL SHEETS
MA	TBD	23	147
PROJECT FILE NO.	604996		

PROFILES

315 NBS DRIVEWAY

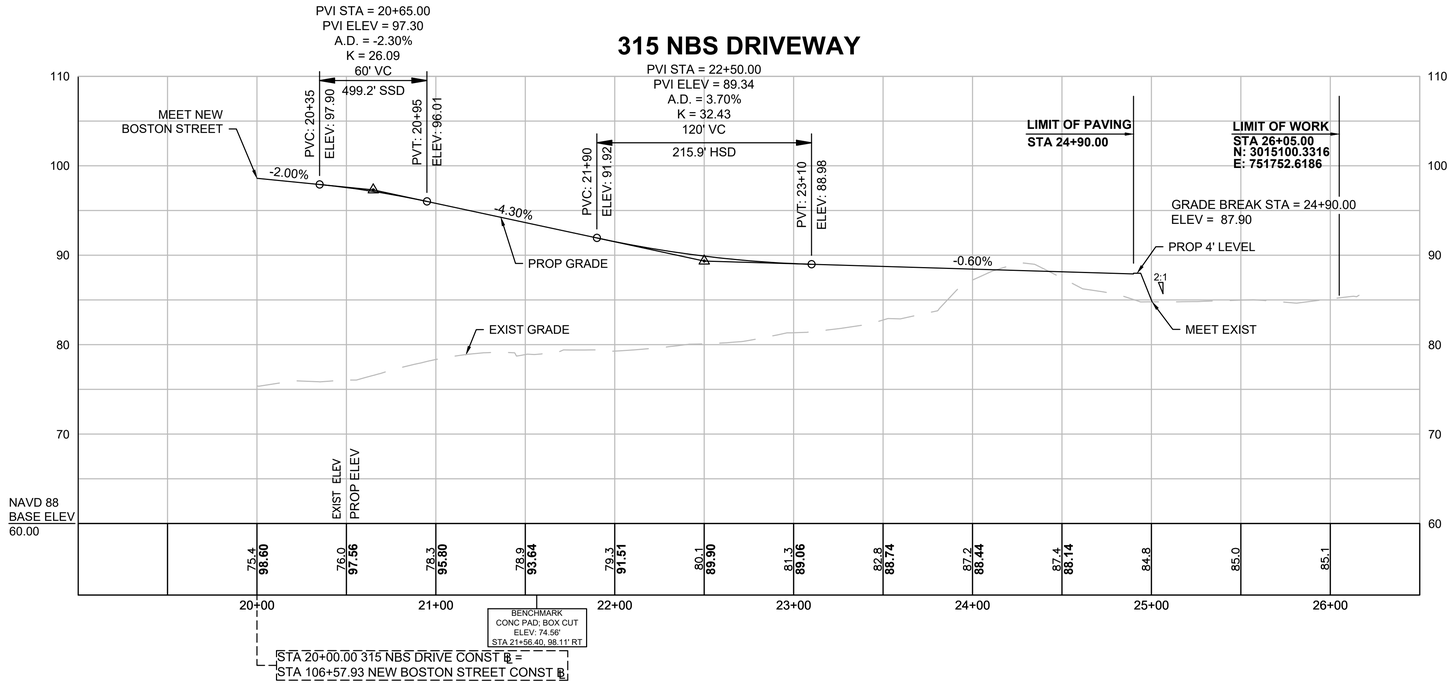

NE RESINS DRIVEWAY

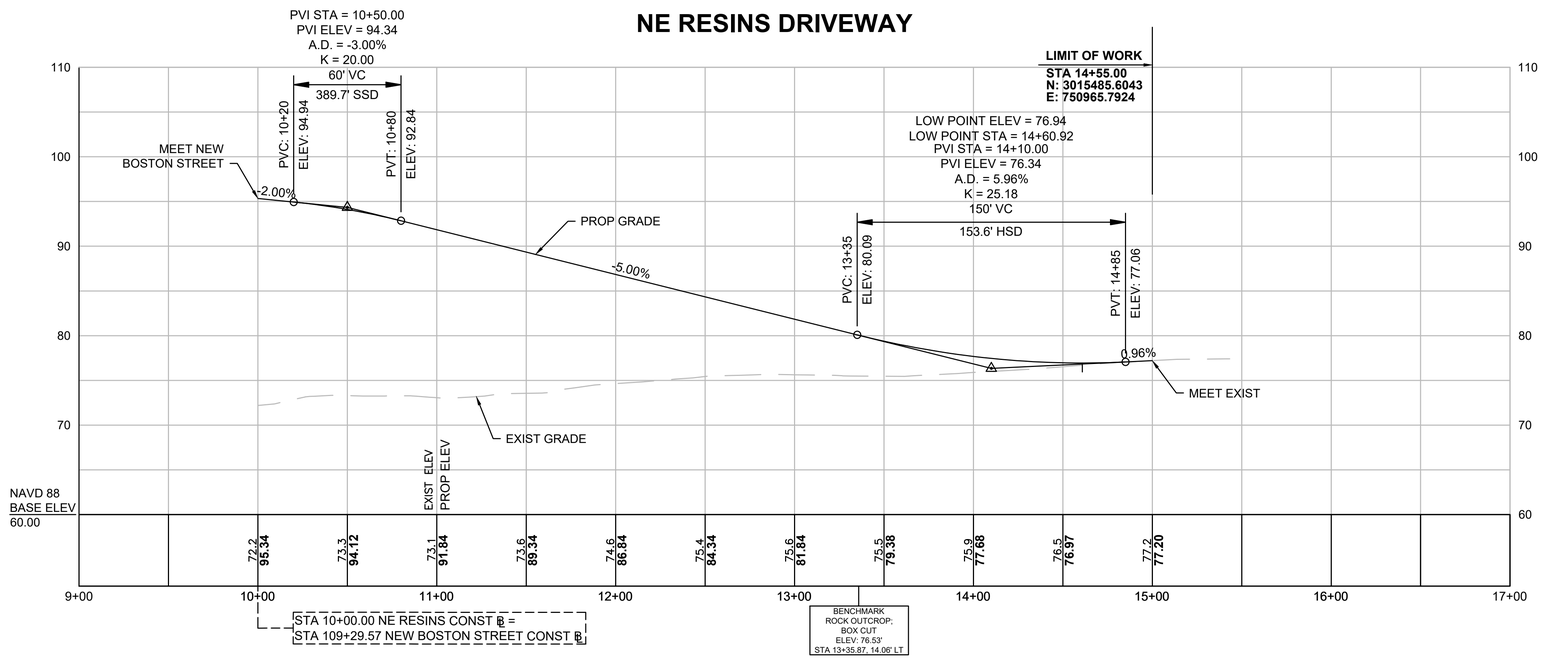

FOR CONSTRUCTION PLANS: SEE SHEET NO. 18 & 20

HOR. SCALE IN FEET
40 0 40 80
8 0 8 16
VER. SCALE IN FEET

604996 HD (PROF).DWG Plotted on 3-Aug-2020 3:13 PM

WOBURN
NEW BOSTON STREET

STATE	FED. AID PROJ. NO.	SHEET NO.	TOTAL SHEETS
MA	TBD	24	147
PROJECT FILE NO.	604996		

ALIGNMENT PLANS

BOUND DATA			
POINT	DESCIRPTION	NORTHING	EASTING
1	WHB #1	3015839.969	751133.494
2	WHB #2	3015767.351	751147.793
3	WHB #3	3015648.376	751188.155
4	WHB #4	3015554.284	751234.737
5	WHB #5	3015439.733	751265.691
6	WHB #6	3015383.247	751306.291
7	WHB #7	3015320.156	751371.960
8	WHB #8	3015220.837	751502.438
9	WHB #9	3015214.056	751543.667
10	WHB #10	3015178.436	751665.576
11	WHB #11	3015132.359	751646.156
12	WHB #12	3015164.719	751535.552
13	WHB #13	3015171.500	751494.323

BOUND DATA			
POINT	DESCIRPTION	NORTHING	EASTING
14	WHB #14	3015169.033	751493.917
15	WHB #15	3015259.419	751347.064
16	WHB #16	3015280.013	751280.011
17	WHB #17	3015136.804	751220.669
18	WHB #18	3015137.799	751215.806
19	WHB #19	3014958.220	751232.442
20	WHB #20	3014886.564	751261.607
21	WHB #21	3015414.264	751210.237
22	WHB #22	3015061.308	751154.769
23	WHB #23	3014937.485	751181.500
24	WHB #24	3014752.624	751256.742
25	WHB #25	3014698.632	751279.329

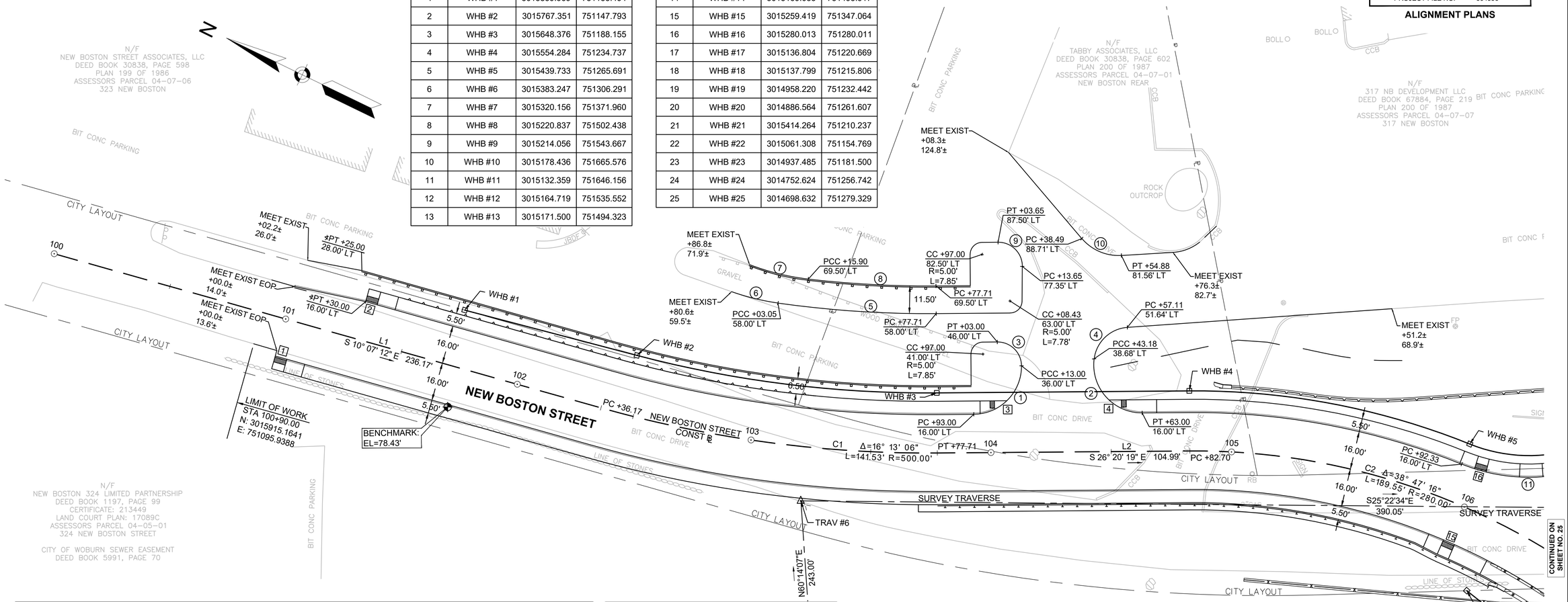

NEW BOSTON STREET CONSTRUCTION BASELINE DATA								
NUMBER	STARTING STATION	NORTHING	EASTING	CURVE DATA	LINE DATA	ENDING STATION	NORTHING	EASTING
L1	100+00.00	3016003.7639	751080.1246		S10°07'12"E 236.17'	102+36.17	3015771.2654	751121.6232
C1	102+36.17	3015771.2654	751121.6232	R=500.00' Δ=16°13'06" L=141.53' T=71.24'		103+77.71	3015637.2843	751165.7500
L2	103+77.71	3015637.2843	751165.7500		S26°20'19"E 104.99'	104+82.70	3015543.1925	751212.3319
C2	104+82.70	3015543.1925	751212.3319	R=280.00' Δ=38°47'16" L=189.55' T=98.57'		106+72.25	3015358.6023	751234.8157
L3	106+72.25	3015358.6023	751234.8157		S12°26'58"W 214.90'	108+87.15	3015148.7598	751188.4894
C3	108+87.15	3015148.7598	751188.4894	R=340.00' Δ=34°35'48" L=205.30' T=105.89'		110+92.45	3014947.2871	751205.5812
L4	110+92.45	3014947.2871	751205.5812		S22°08'51"E 199.59'	112+92.03	3014762.4262	751280.8237
C4	112+92.03	3014762.4262	751280.8237	R=3000.00' Δ=4°59'59" L=261.78' T=130.98'		115+53.82	3014524.5682	751389.9610
L5	115+53.82	3014524.5682	751389.9610		S27°08'50"E 346.18'	119+00.00	3014216.5221	751547.9160

CURVE TABLE				
CURVE	RADIUS	LENGTH	TANGENT	DELTA
1	20.00	31.42	20.00	90° 00' 00"
2	20.00	34.10	22.88	97° 41' 12"
3	10.00	15.71	10.00	90° 00' 00"
4	15.00	20.61	12.31	78° 44' 35"
5	442.00	65.99	33.06	8° 33' 16"
6	100.00	19.88	9.97	11° 23' 21"
7	100.00	25.19	12.66	14° 26' 00"
8	430.50	53.21	26.64	7° 04' 55"
9	10.00	15.86	10.15	90° 51' 53"
10	20.00	18.53	9.99	53° 05' 51"
11	75.00	83.26	46.51	63° 36' 16"

TRAVERSE CHART				
POINT #	NORTHING	EASTING	ELEVATION	DESCRIPTION
TRAV NO.1	3014148.1770	751606.7139	69.51	MTRV MMAG
TRAV NO.2	3014493.1549	751384.7956	70.47	MTRV MMAG
TRAV NO.3	3014807.4987	751280.8060	72.97	MTRV MMAG
TRAV NO.4	3015138.5374	751195.0259	72.68	MTRV MDHL
TRAV NO.5	3015558.9443	750912.1277	77.64	MTRV MMAG
TRAV NO.6	3015679.5795	751123.0700	78.23	MTRV MMAG
TRAV NO.7	3015327.1572	751290.2176	75.93	MTRV MMAG
TRAV NO.8	3015098.5590	751370.7869	85.32	MTRV MMAG
TRAV NO.9	3014947.9270	751233.4000	72.28	MTRV MMAG
TRAV NO.10	3013688.8506	751802.9701	65.54	MTRV MMAG
TRAV NO.40	3014970.5348	751311.9405	85.33	MTRV MMAG
TRAV NO.70	3015390.1279	751516.7092	83.68	MTRV MMAG

CONTINUED ON SHEET NO. 25

604996_HD(ALGN).DWG Plotted on 3-Aug-2020 3:14 PM

WOBURN
NEW BOSTON STREET

STATE	FED. AID PROJ. NO.	SHEET NO.	TOTAL SHEETS
MA	TBD	25	147
PROJECT FILE NO.	604996		

ALIGNMENT PLANS

CURVE TABLE				
CURVE	RADIUS	LENGTH	TANGENT	DELTA
11	75.00	83.26	46.51	63° 36' 16"
12	25.00	37.34	23.14	85° 35' 05"
13	84.00	82.52	44.94	56° 17' 20"
14	25.00	51.27	41.21	117° 30' 33"
15	25.00	33.14	19.52	75° 57' 14"
22	87.00	89.51	49.17	58° 57' 05"
23	150.00	84.29	43.29	32° 11' 41"
27	80.00	108.67	64.58	77° 49' 41"

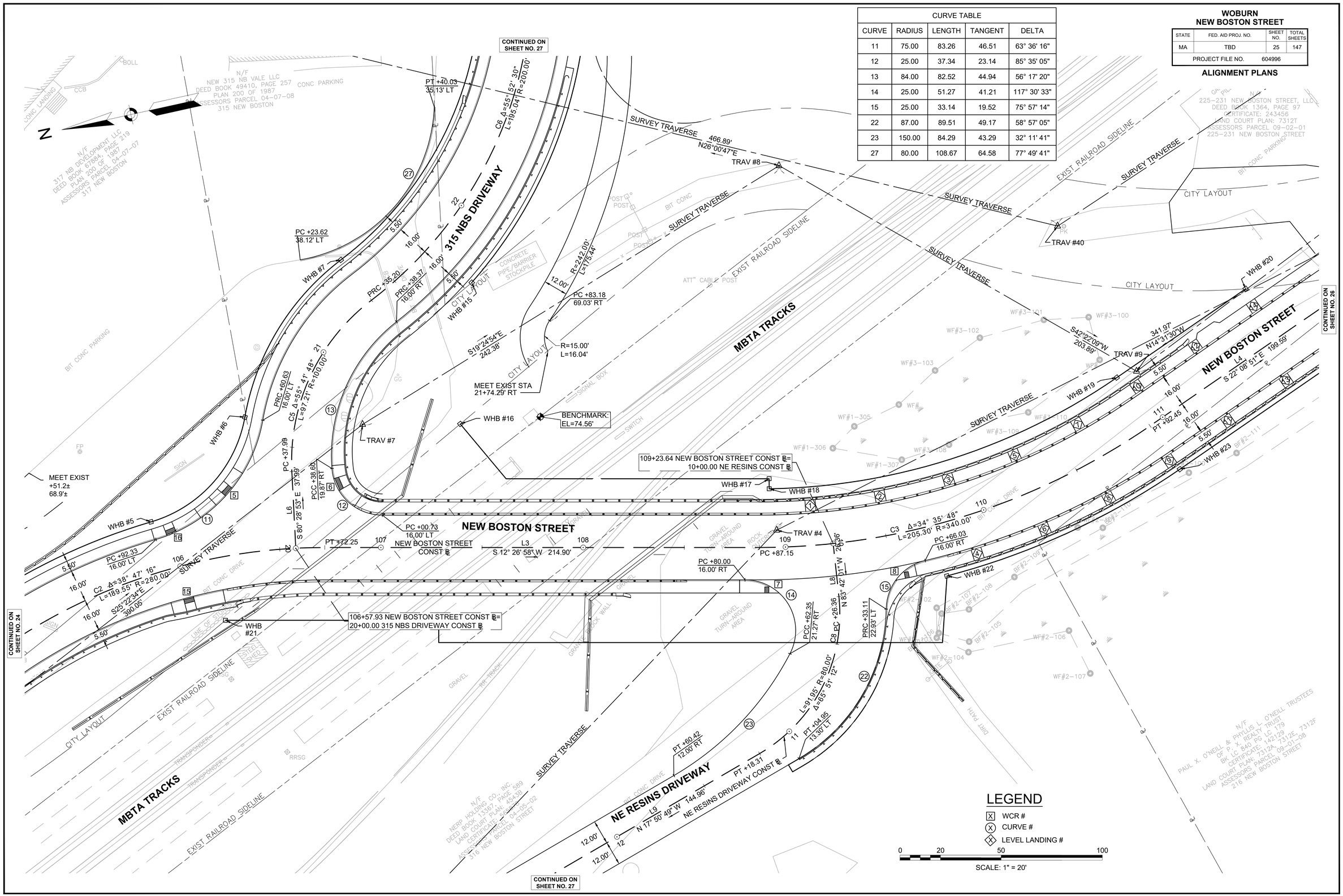

604996_HD(ALGN).DWG Plotted on 3-Aug-2020 3:15 PM

WOBURN
NEW BOSTON STREET

STATE	FED. AID PROJ. NO.	SHEET NO.	TOTAL SHEETS
MA	TBD	26	147
PROJECT FILE NO.	604996		

ALIGNMENT PLANS

CURVE TABLE				
CURVE	RADIUS	LENGTH	TANGENT	DELTA
16	10.00	14.59	8.94	83° 34' 41"
17	10.00	12.58	7.28	72° 05' 52"

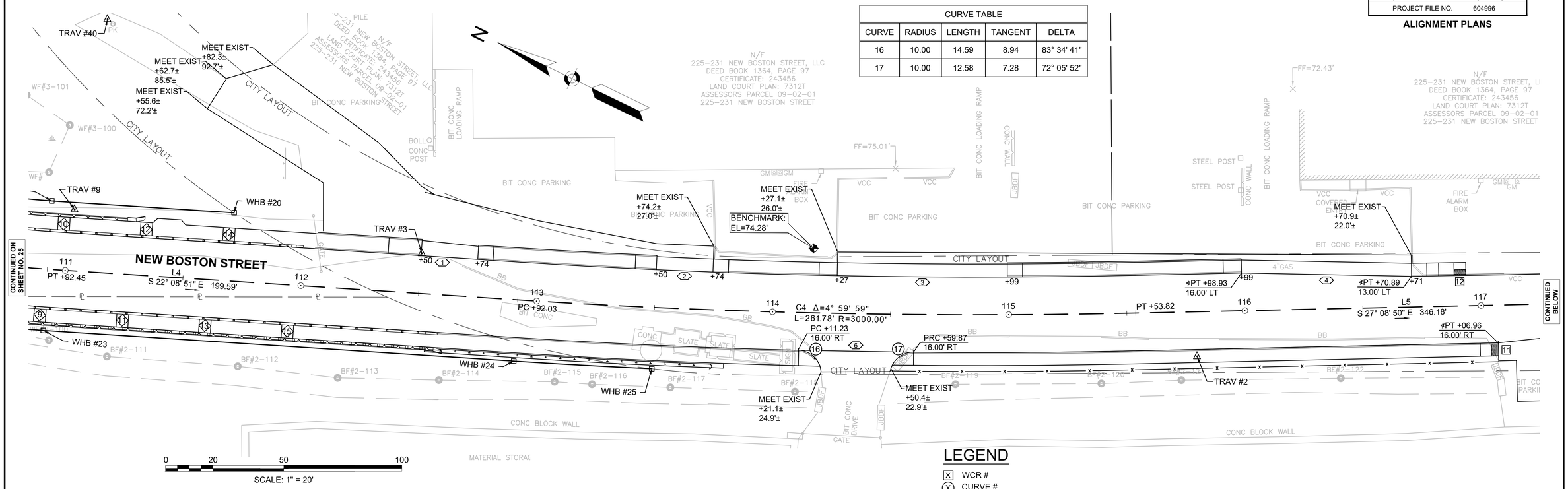

LEGEND

- (X) WCR #
- (X) CURVE #
- (X) DRIVEWAY #
- (X) LEVEL LANDING #

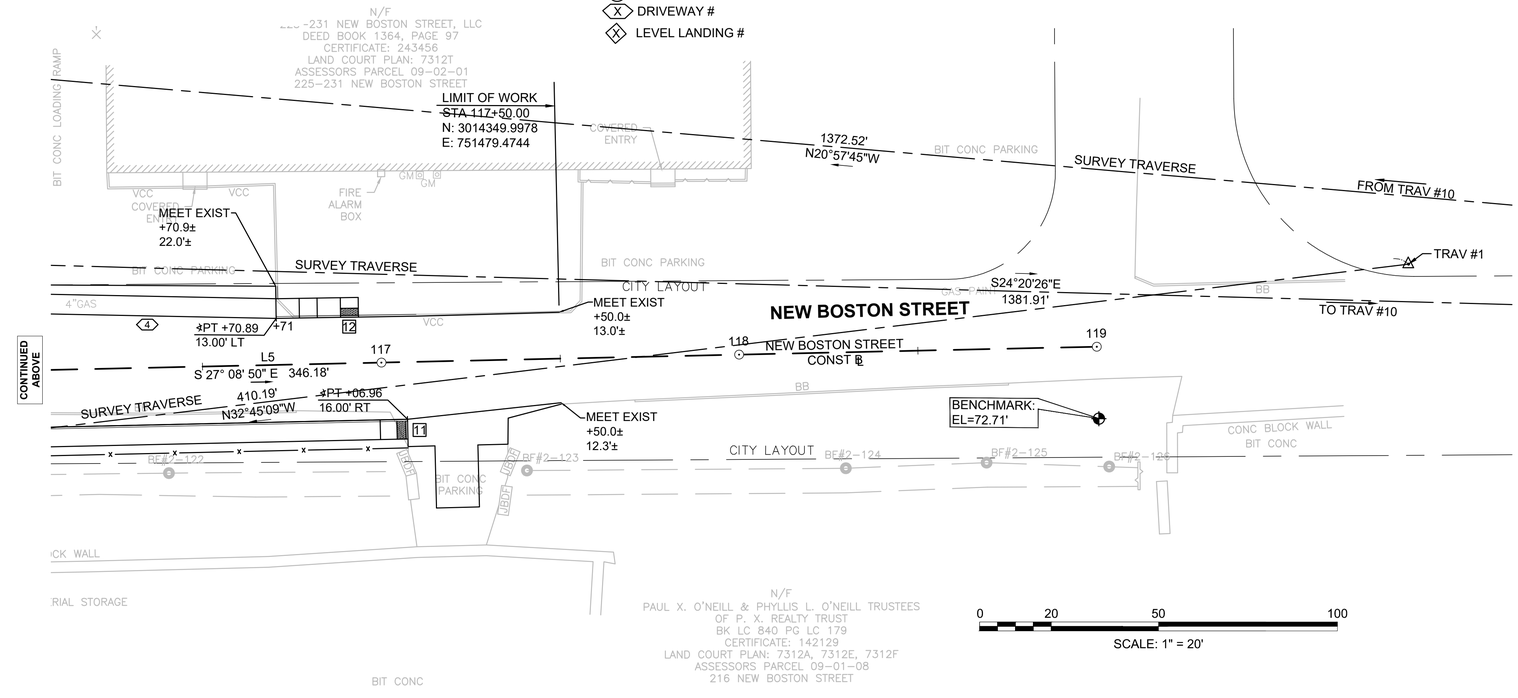

604996_HD(ALGN).DWG Plotted on 3-Aug-2020 3:15 PM

WOBURN
NEW BOSTON STREET

STATE	FED. AID PROJ. NO.	SHEET NO.	TOTAL SHEETS
MA	TBD	27	147
PROJECT FILE NO.	604996		

ALIGNMENT PLANS

CURVE TABLE				
CURVE	RADIUS	LENGTH	TANGENT	DELTA
18	25.00	36.82	22.66	84° 22' 40"
19	10.00	18.04	12.65	103° 21' 09"
20	10.00	15.52	9.81	88° 54' 38"
21	50.00	16.69	8.42	19° 07' 26"

315 NBS DRIVEWAY CONSTRUCTION BASELINE DATA								
NUMBER	STARTING STATION	NORTHING	EASTING	CURVE DATA	LINE DATA	ENDING STATION	NORTHING	EASTING
L6	20+00.00	3015372.6602	751237.5442		S80°28'53"E 37.99'	20+37.99	3015366.3779	751275.0106
C5	20+37.99	3015366.3779	751275.0106	R=100.00' Δ=55°41'48" L=97.21' T=52.83'		21+35.20	3015309.6755	751349.2627
C6	21+35.20	3015309.6755	751349.2627	R=200.00' Δ=55°52'30" L=195.04' T=106.06'		23+30.24	3015196.1688	751498.3807
L7	23+30.24	3015196.1688	751498.3807		S80°39'34"E 41.78'	23+72.02	3015189.3874	751539.6097
C7	23+72.02	3015189.3874	751539.6097	R=500.00' Δ=55°38'28" L=485.56' T=263.85'		28+57.58	3014907.4716	751911.5456

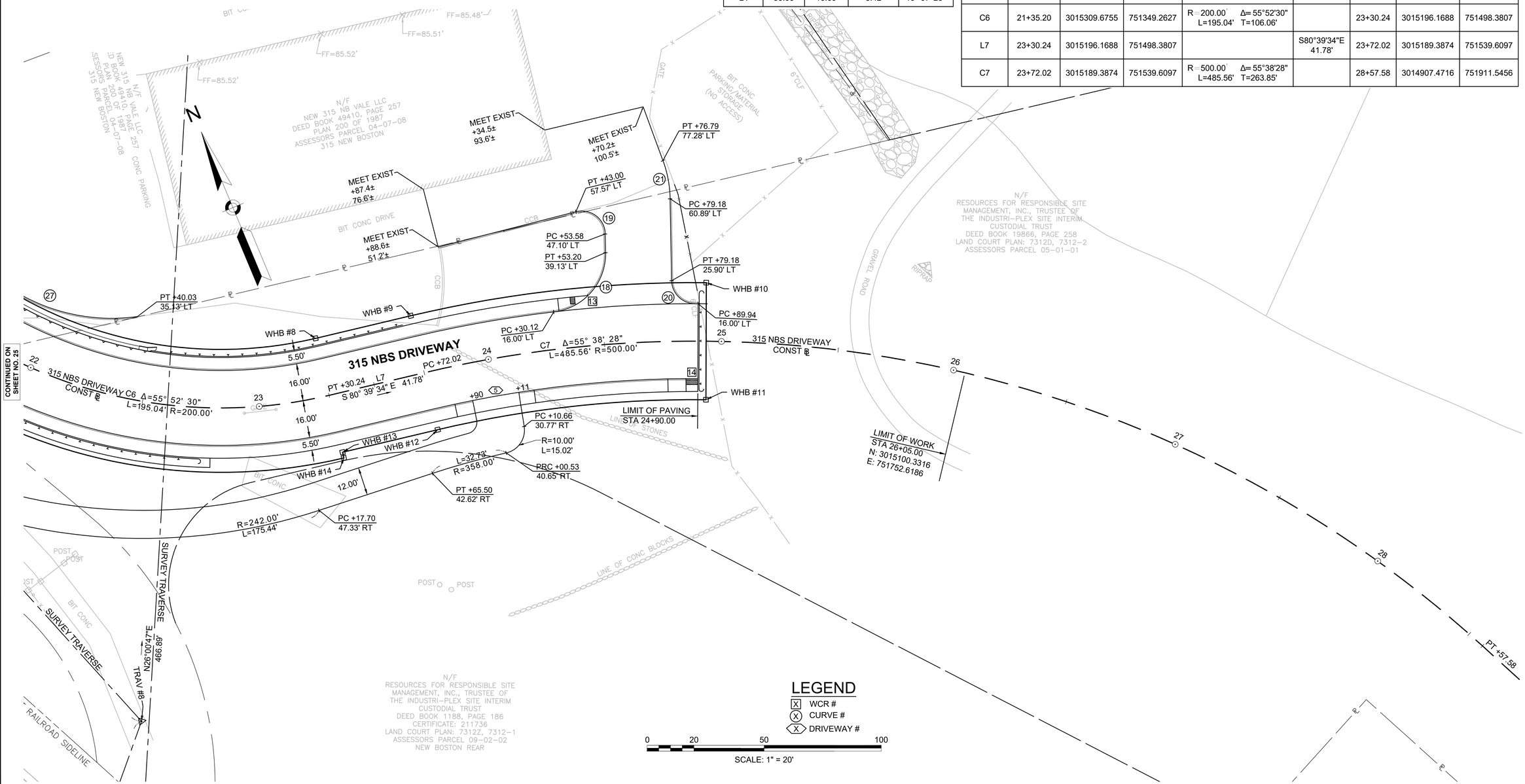

604996_HD(ALGN).DWG Plotted on 3-Aug-2020 3:15 PM

WOBURN
NEW BOSTON STREET

STATE	FED. AID PROJ. NO.	SHEET NO.	TOTAL SHEETS
MA	TBD	28	147
PROJECT FILE NO.	604996		

ALIGNMENT PLANS

NE RESINS CONSTRUCTION BASELINE DATA								
NUMBER	STARTING STATION	NORTHING	EASTING	CURVE DATA	LINE DATA	ENDING STATION	NORTHING	EASTING
L8	10+00.00	3015112.7715	751182.5481		N83°42'01"W 26.36'	10+26.36	3015115.6642	751156.3443
C8	10+26.36	3015115.6642	751156.3443	R=80.00' Δ=65°51'12" L=91.95' T=51.81'		11+18.31	3015170.6630	751088.9723
L9	11+18.31	3015170.6630	751088.9723		N17°50'49"W 144.96'	12+63.27	3015308.6431	751044.5469
C9	12+63.27	3015308.6431	751044.5469	R=500.00' Δ=7°11'55" L=62.82' T=31.45'		13+26.09	3015367.0738	751021.5937
C10	13+26.09	3015367.0738	751021.5937	R=5012.04' Δ=3°07'53" L=273.92' T=136.99'		16+00.00	3015611.9372	750898.9025

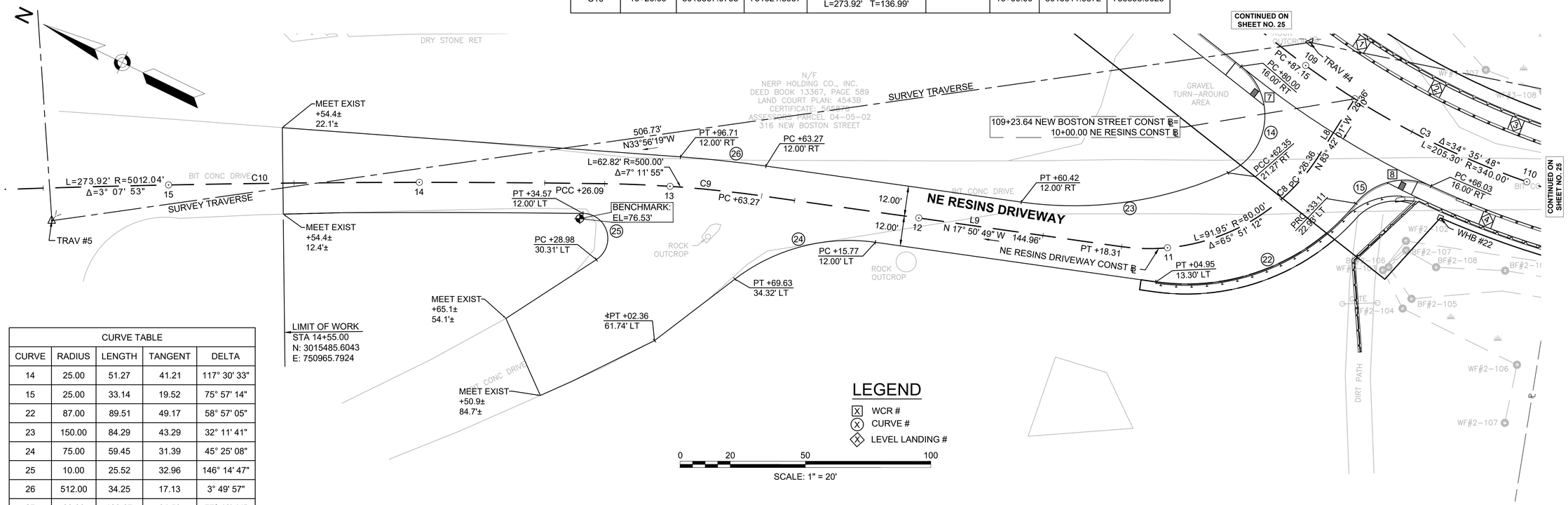

CURVE TABLE				
CURVE	RADIUS	LENGTH	TANGENT	DELTA
14	25.00	51.27	41.21	117° 30' 33"
15	25.00	33.14	19.52	75° 57' 14"
22	87.00	89.51	49.17	58° 57' 05"
23	150.00	84.29	43.29	32° 11' 41"
24	75.00	59.45	31.39	45° 25' 08"
25	10.00	25.52	32.96	146° 14' 47"
26	512.00	34.25	17.13	3° 49' 57"
27	80.00	108.67	64.58	77° 49' 41"

LEGEND

- [X] WCR #
- (X) CURVE #
- ⟨X⟩ LEVEL LANDING #

604996_HD(ALGN).DWG Plotted on 3-Aug-2020 3:15 PM

WOBURN
NEW BOSTON STREET

STATE	FED. AID PROJ. NO.	SHEET NO.	TOTAL SHEETS
MA	TBD	29	147
PROJECT FILE NO.	604996		

GRADING PLANS

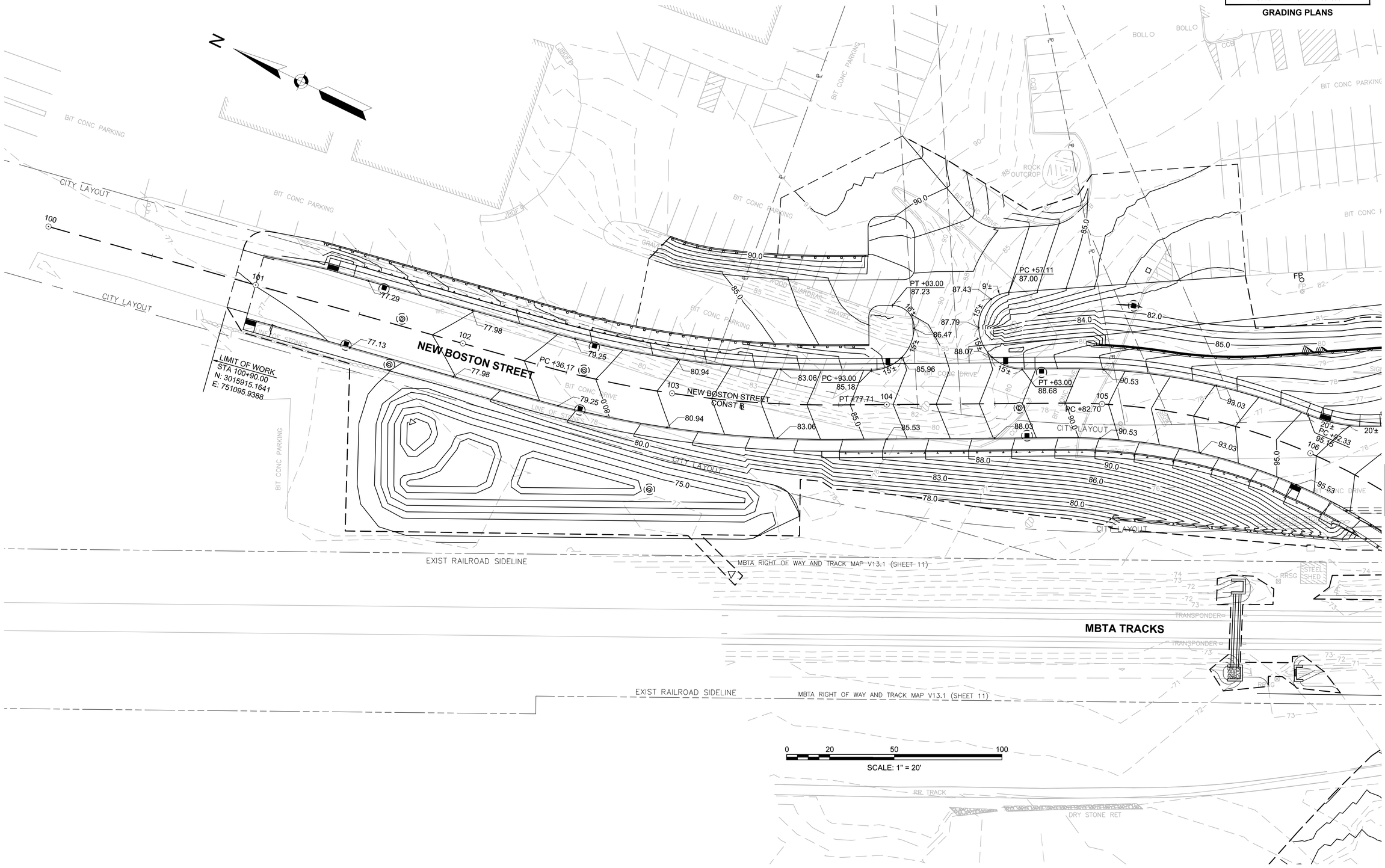

604996_HD(GRAD).DWG Plotted on 3-Aug-2020 10:10 PM

WOBURN
NEW BOSTON STREET

STATE	FED. AID PROJ. NO.	SHEET NO.	TOTAL SHEETS
MA	TBD	30	147
PROJECT FILE NO.	604996		

GRADING PLANS

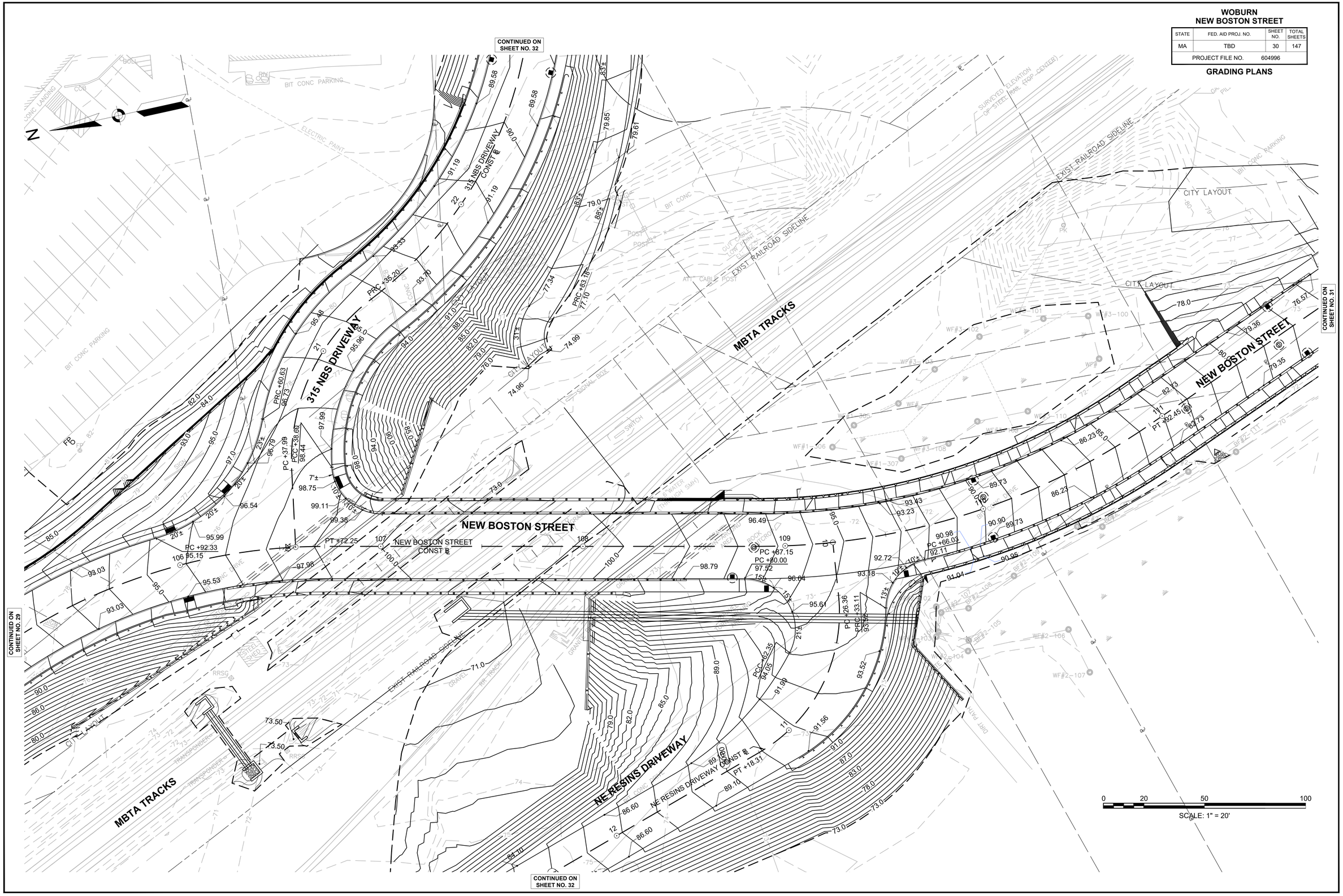

604996_HD(GRAD).DWG Plotted on 3-Aug-2020 3:17 PM

WOBURN
NEW BOSTON STREET

STATE	FED. AID PROJ. NO.	SHEET NO.	TOTAL SHEETS
MA	TBD	31	147
PROJECT FILE NO.	604996		

GRADING PLANS

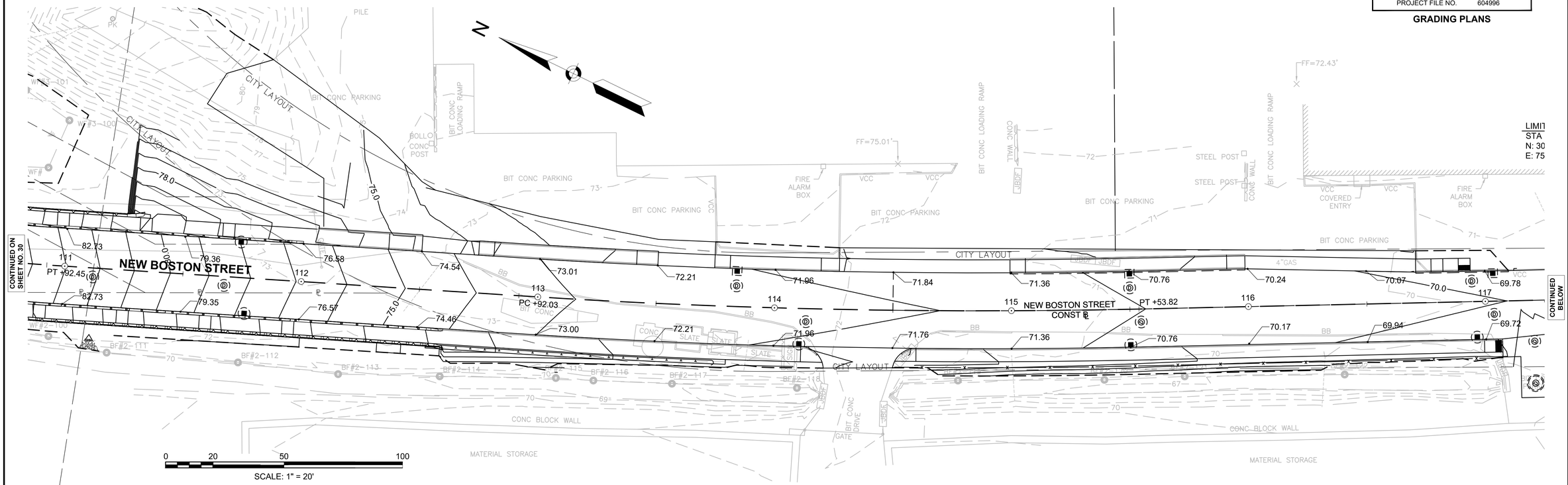

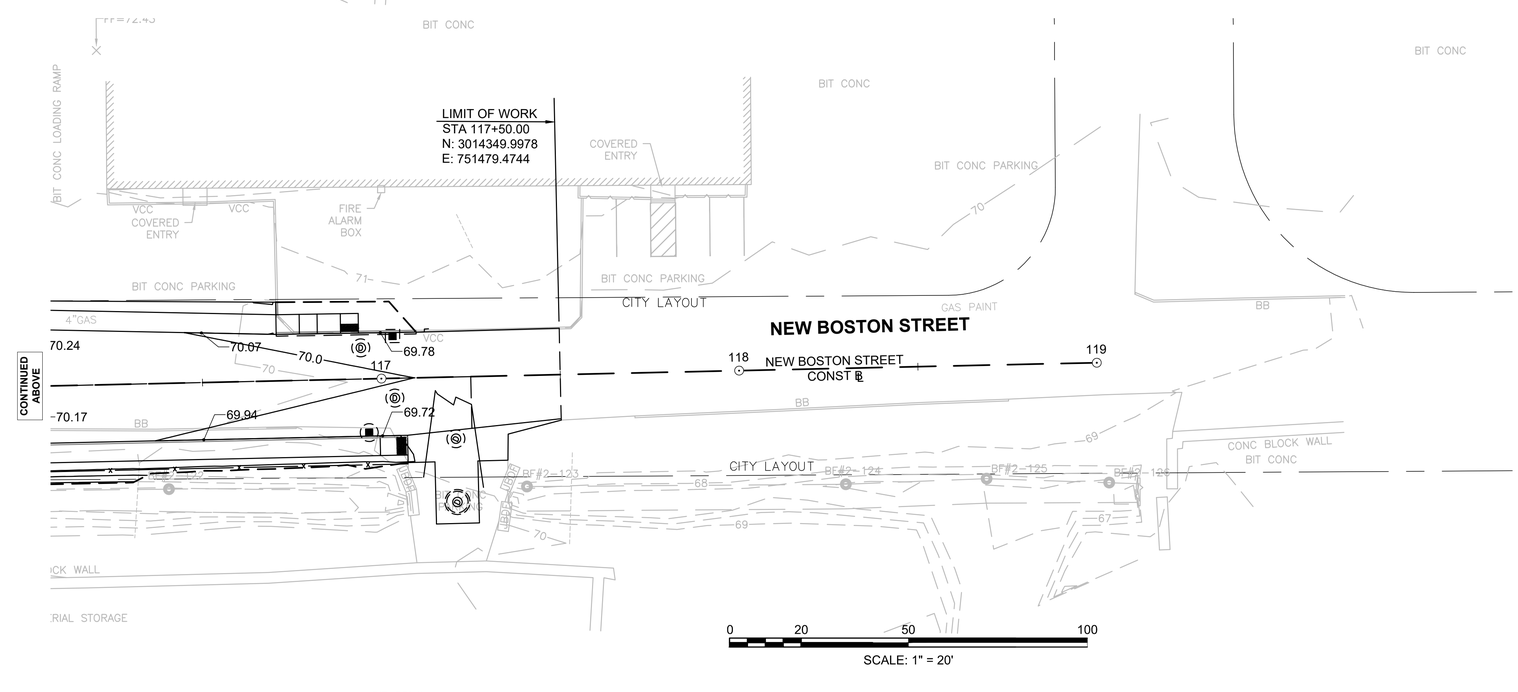

604996_HD(GRAD).DWG Plotted on 3-Aug-2020 3:17 PM

WOBURN
NEW BOSTON STREET

STATE	FED. AID PROJ. NO.	SHEET NO.	TOTAL SHEETS
MA	TBD	32	147
PROJECT FILE NO.	604996		

GRADING PLANS

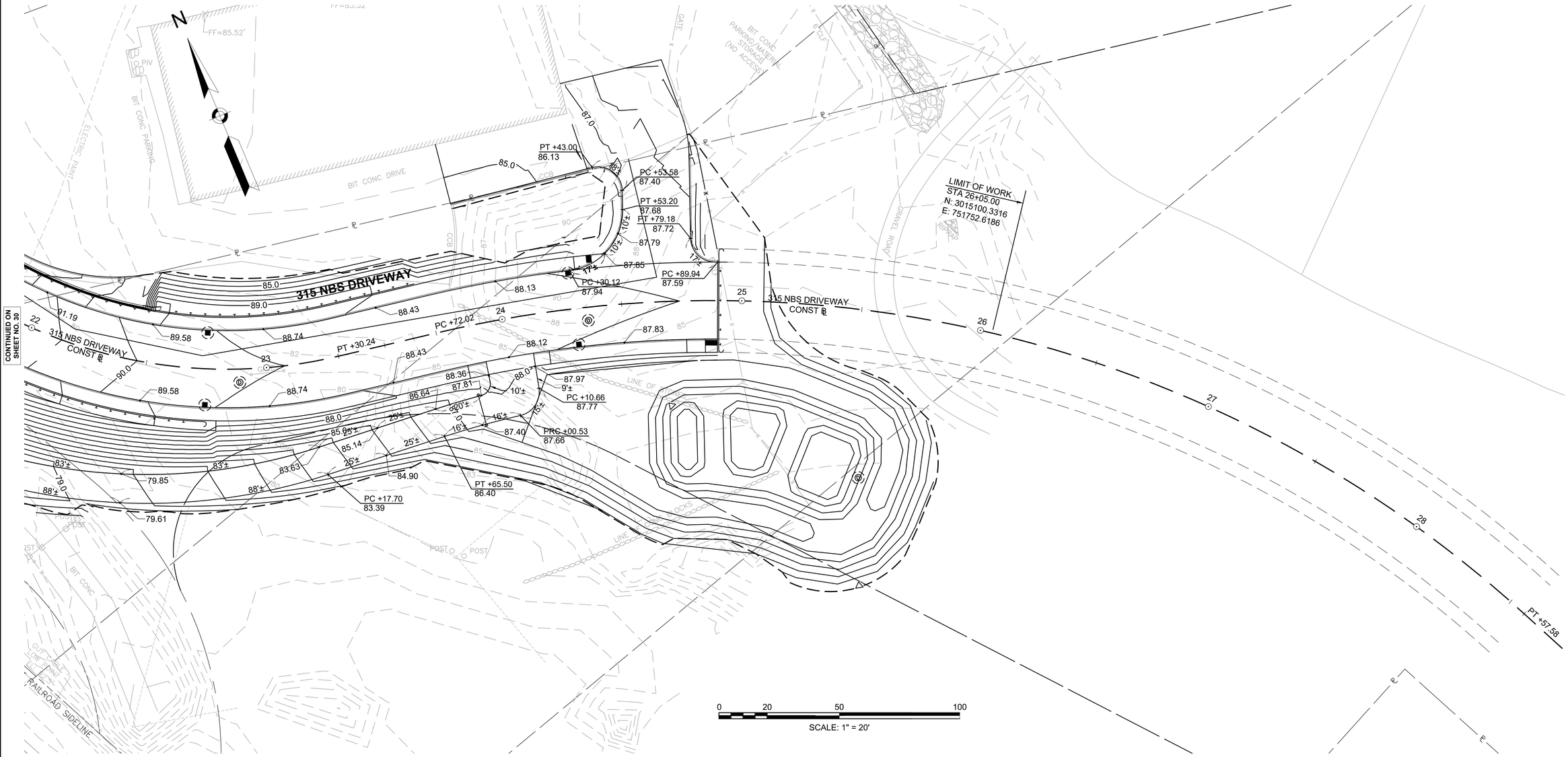

0 20 50 100
SCALE: 1" = 20'

604996_HD(GRAD).DWG Plotted on 3-Aug-2020 3:17 PM

WOBURN
NEW BOSTON STREET

STATE	FED. AID PROJ. NO.	SHEET NO.	TOTAL SHEETS
MA	TBD	33	147
PROJECT FILE NO.	604996		

GRADING PLANS

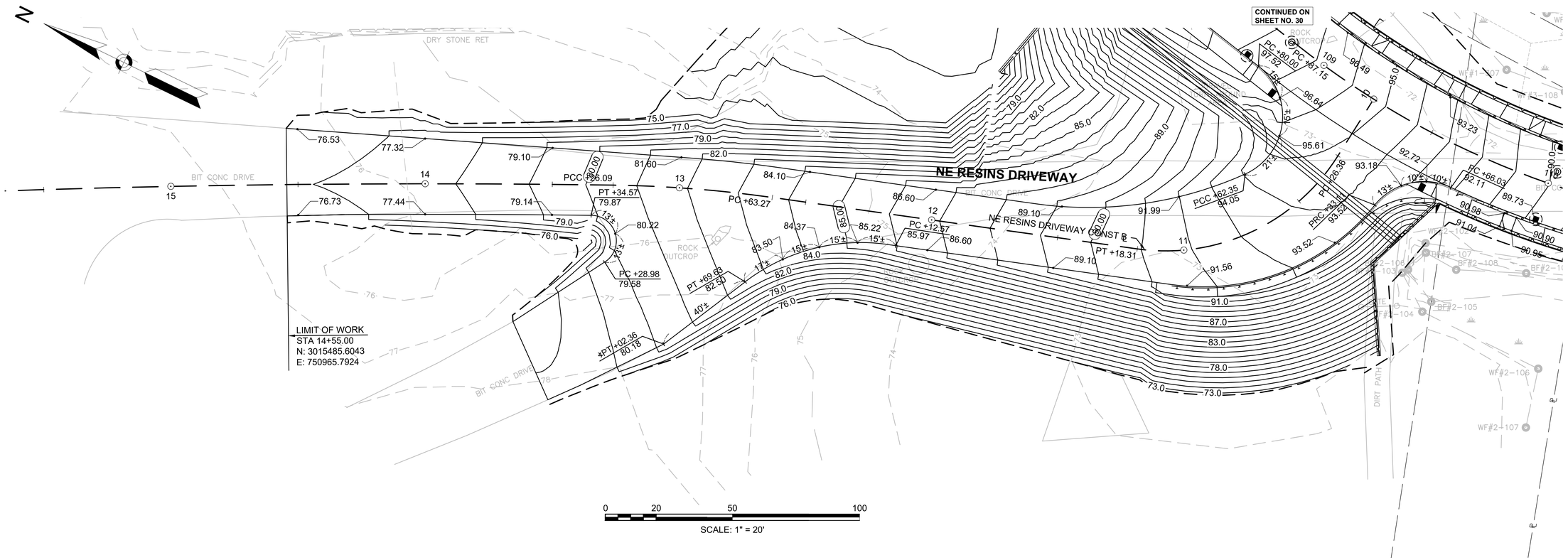

604996_HD(GRAD).DWG Plotted on 3-Aug-2020 3:17 PM

WOBURN
NEW BOSTON STREET

STATE	FED. AID PROJ. NO.	SHEET NO.	TOTAL SHEETS
MA	TBD	34	147
PROJECT FILE NO.	604996		

STORMWATER BMP PLANS

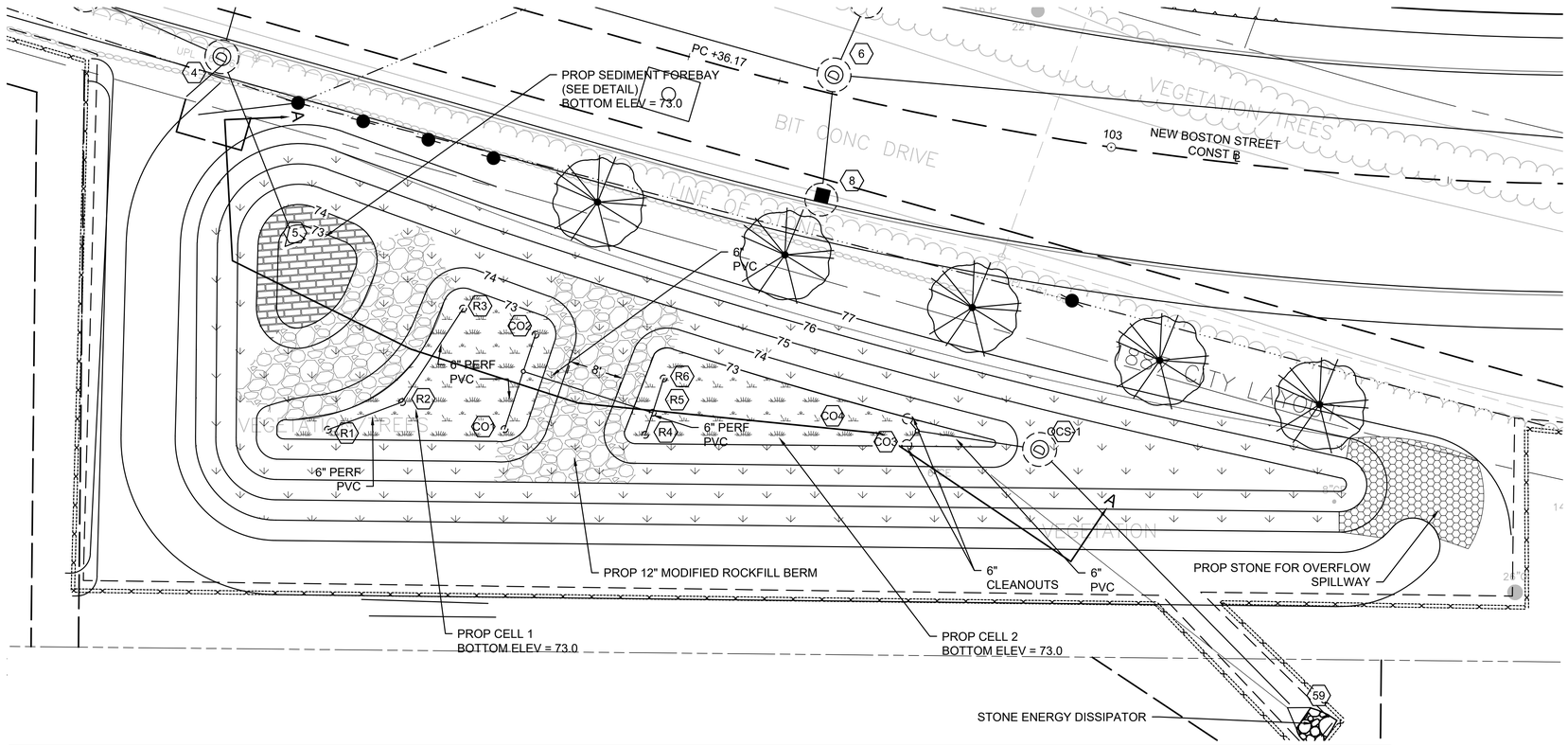

LINED GRAVEL WETLAND A - PLAN

SCALE: NTS

SEEDING LEGEND	
SYMBOL	SEED MIX
	BASIN MIX
	CONSERVATION MIX

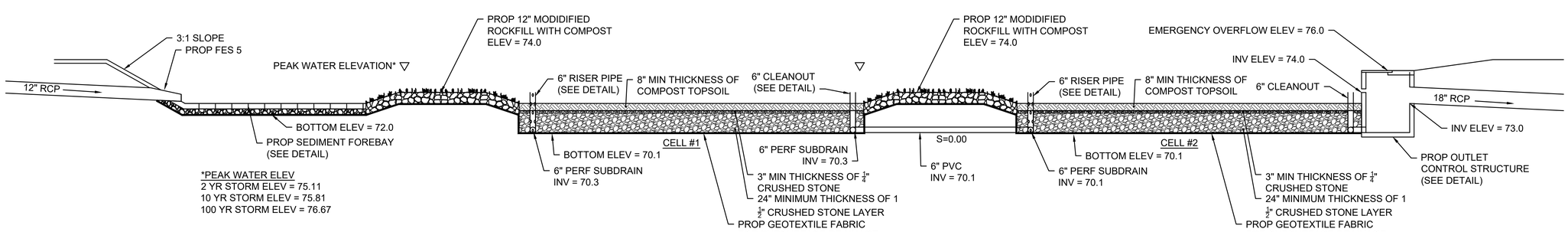

LINED GRAVEL WETLAND A - SECTION A-A

SCALE: NTS

604996_HD(BMP).DWG Plotted on 3-Aug-2020 10:24 PM

WOBURN
NEW BOSTON STREET

STATE	FED. AID PROJ. NO.	SHEET NO.	TOTAL SHEETS
MA	TBD	35	147
PROJECT FILE NO.	604996		

STORMWATER BMP PLANS

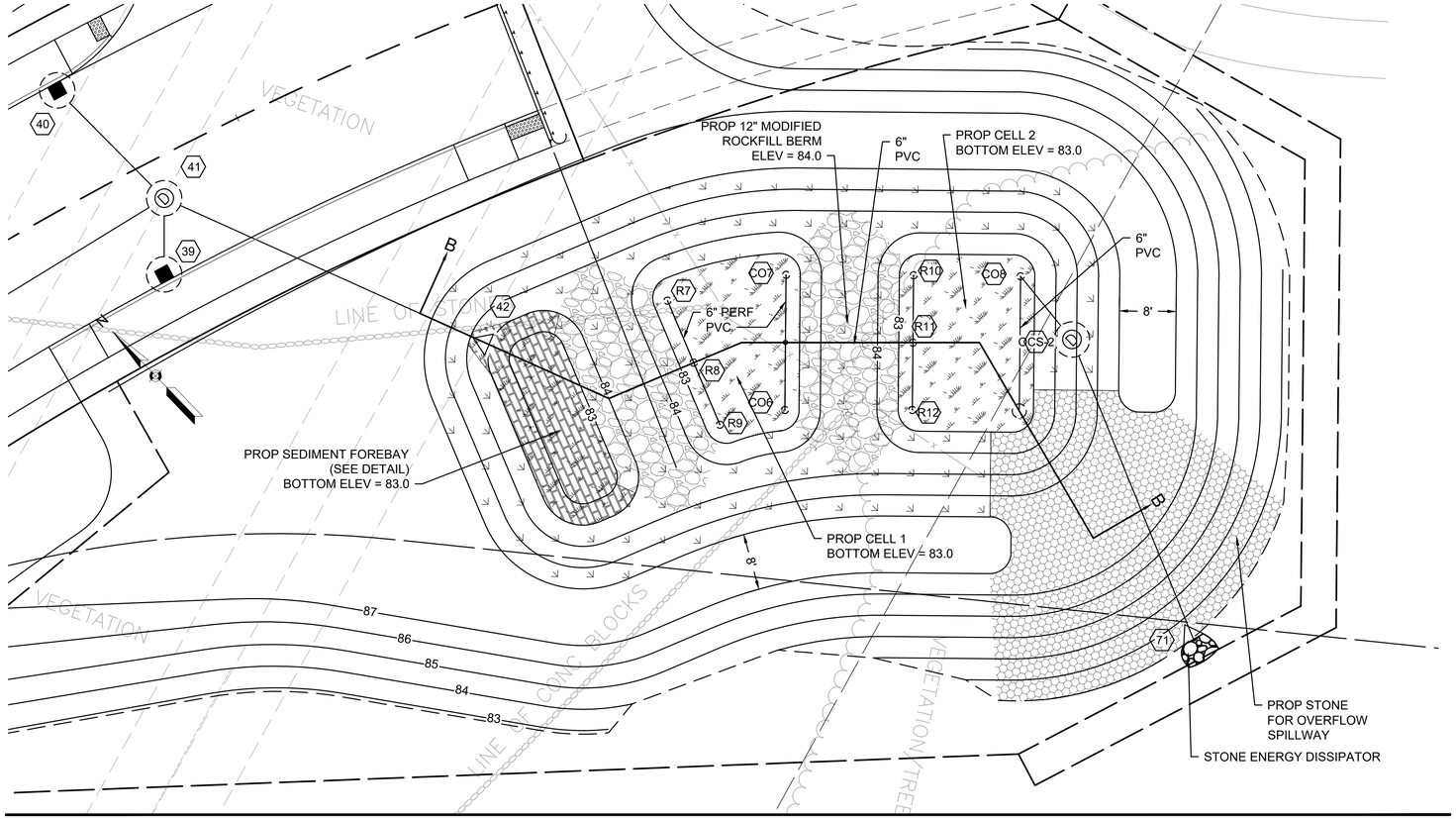

LINED GRAVEL WETLAND B - PLAN

SCALE: NTS

SEEDING LEGEND	
SYMBOL	SEED MIX
	BASIN MIX
	CONSERVATION MIX

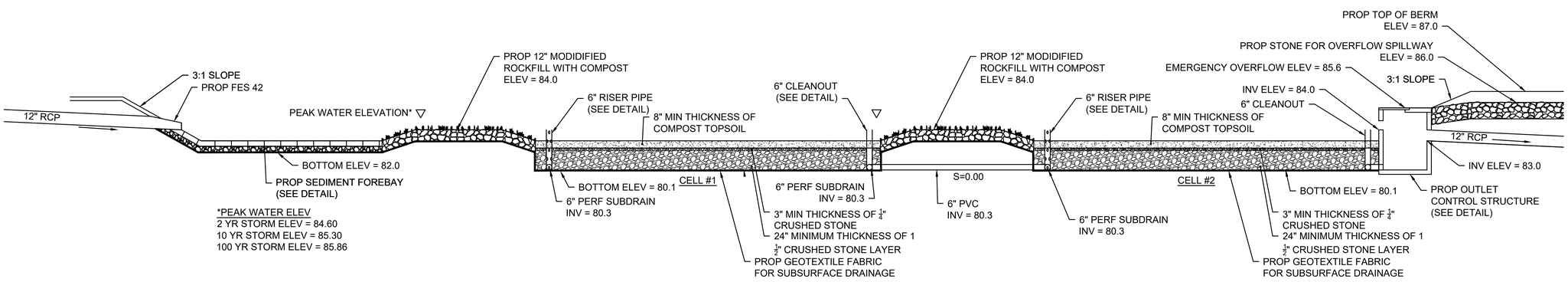

LINED GRAVEL WETLAND B - SECTION B-B

SCALE: NTS

604996_HD(BMP).DWG Plotted on 3-Aug-2020 10:12 PM

WOBURN
NEW BOSTON STREET

STATE	FED. AID PROJ. NO.	SHEET NO.	TOTAL SHEETS
MA	TBD	36	147
PROJECT FILE NO.	604996		

SIGNING & STRIPING PLANS

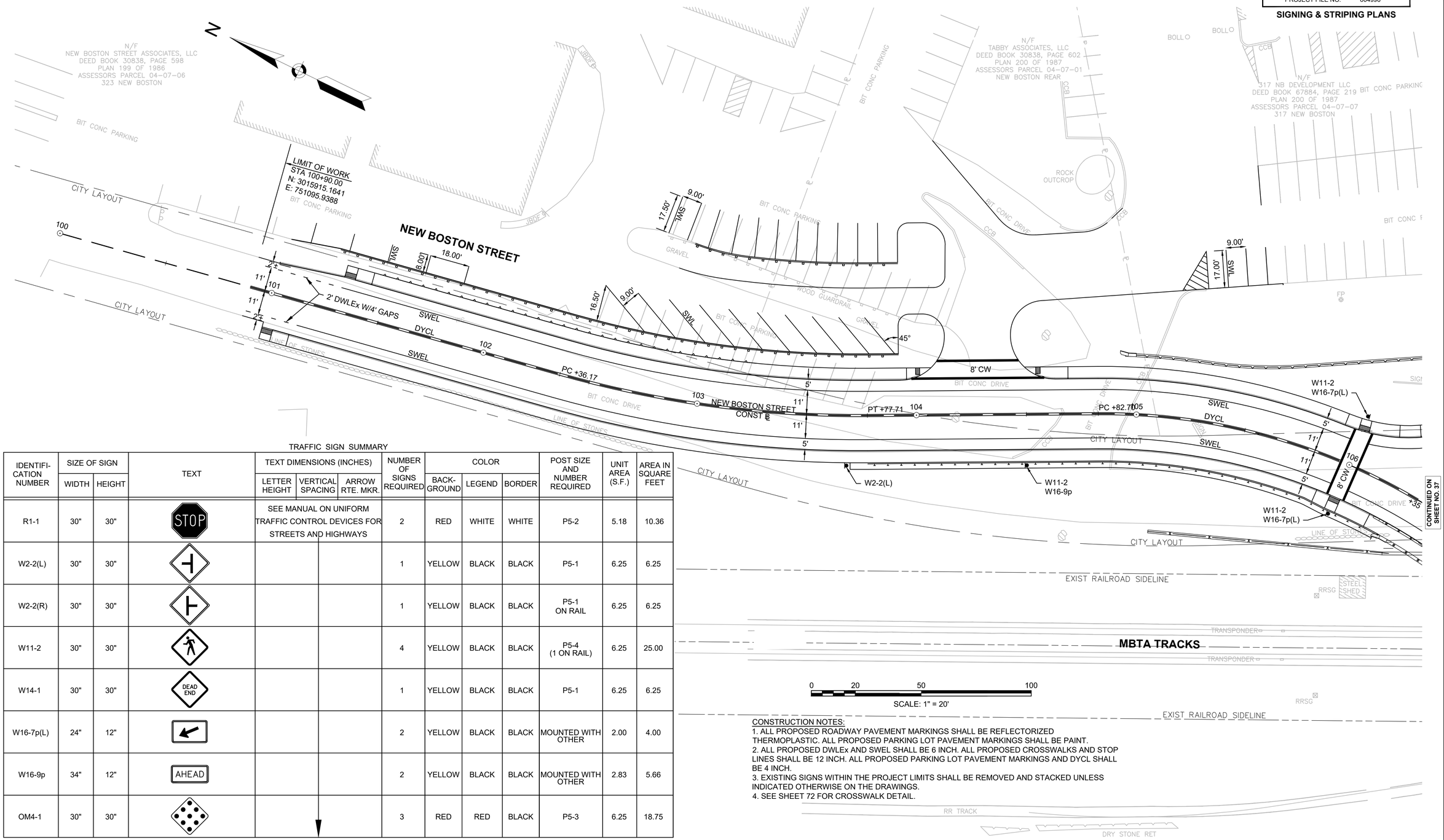

CONSTRUCTION NOTES:
1. ALL PROPOSED ROADWAY PAVEMENT MARKINGS SHALL BE REFLECTORIZED THERMOPLASTIC. ALL PROPOSED PARKING LOT PAVEMENT MARKINGS SHALL BE PAINT.
2. ALL PROPOSED DWLEx AND SWEL SHALL BE 6 INCH. ALL PROPOSED CROSSWALKS AND STOP LINES SHALL BE 12 INCH. ALL PROPOSED PARKING LOT PAVEMENT MARKINGS AND DYCL SHALL BE 4 INCH.
3. EXISTING SIGNS WITHIN THE PROJECT LIMITS SHALL BE REMOVED AND STACKED UNLESS INDICATED OTHERWISE ON THE DRAWINGS.
4. SEE SHEET 72 FOR CROSSWALK DETAIL.

TRAFFIC SIGN SUMMARY

IDENTIFICATION NUMBER	SIZE OF SIGN		TEXT	TEXT DIMENSIONS (INCHES)			NUMBER OF SIGNS REQUIRED	COLOR			POST SIZE AND NUMBER REQUIRED	UNIT AREA (S.F.)	AREA IN SQUARE FEET
	WIDTH	HEIGHT		LETTER HEIGHT	VERTICAL SPACING	ARROW RTE. MKR.		BACK-GROUND	LEGEND	BORDER			
R1-1	30"	30"	STOP	SEE MANUAL ON UNIFORM TRAFFIC CONTROL DEVICES FOR STREETS AND HIGHWAYS			2	RED	WHITE	WHITE	P5-2	5.18	10.36
W2-2(L)	30"	30"					1	YELLOW	BLACK	BLACK	P5-1	6.25	6.25
W2-2(R)	30"	30"					1	YELLOW	BLACK	BLACK	P5-1 ON RAIL	6.25	6.25
W11-2	30"	30"					4	YELLOW	BLACK	BLACK	P5-4 (1 ON RAIL)	6.25	25.00
W14-1	30"	30"	DEAD END				1	YELLOW	BLACK	BLACK	P5-1	6.25	6.25
W16-7p(L)	24"	12"					2	YELLOW	BLACK	BLACK	MOUNTED WITH OTHER	2.00	4.00
W16-9p	34"	12"	AHEAD				2	YELLOW	BLACK	BLACK	MOUNTED WITH OTHER	2.83	5.66
OM4-1	30"	30"					3	RED	RED	BLACK	P5-3	6.25	18.75

NOTES:
1. HIGH INTENSITY REFLECTIVE SHEETING SHALL BE USED FOR ALL SIGNS. SEE FHWA "STANDARD HIGHWAY SIGNS, 2004 EDITION" FOR TEXT DIMENSIONS, AS AMENDED; THE 1977 MASSHIGHWAY DEPARTMENT CONSTRUCTION AND TRAFFIC STANDARD DETAILS, AS AMENDED; FOR SIGNS AND SUPPORTS, AND THE MASSHIGHWAY DEPARTMENT SIGN LISTINGS 1993 EDITION, AS AMENDED.
2. P5 POSTS ATTACHED TO RAIL WILL BE PAID FOR UNDER ITEM 847.1.
3. EXISTING SIGNS WITHIN THE PROJECT LIMITS SHALL BE REMOVED AND STACKED UNLESS INDICATED OTHERWISE ON THE DRAWINGS.

604996 HD (STRP).DWG Plotted on 3-Aug-2020 3:19 PM

WOBURN
NEW BOSTON STREET

STATE	FED. AID PROJ. NO.	SHEET NO.	TOTAL SHEETS
MA	TBD	37	147
PROJECT FILE NO.	604996		

SIGNING & STRIPING PLANS

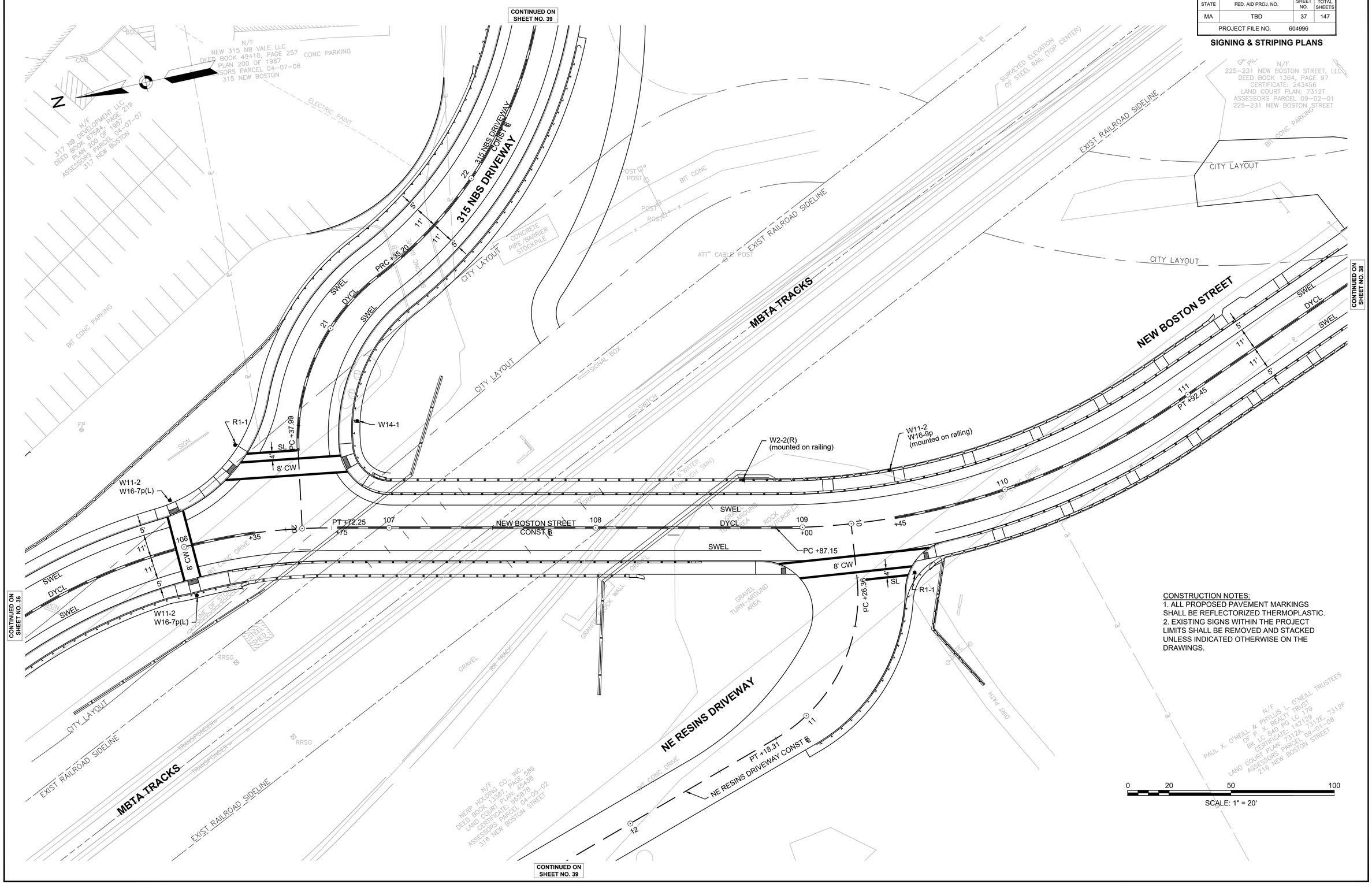

CONSTRUCTION NOTES:
1. ALL PROPOSED PAVEMENT MARKINGS SHALL BE REFLECTORIZED THERMOPLASTIC.
2. EXISTING SIGNS WITHIN THE PROJECT LIMITS SHALL BE REMOVED AND STACKED UNLESS INDICATED OTHERWISE ON THE DRAWINGS.

604996 HD (STRP).DWG Plotted on 3-Aug-2020 3:19 PM

WOBURN
NEW BOSTON STREET

STATE	FED. AID PROJ. NO.	SHEET NO.	TOTAL SHEETS
MA	TBD	38	147
PROJECT FILE NO.	604996		

SIGNING & STRIPING PLANS

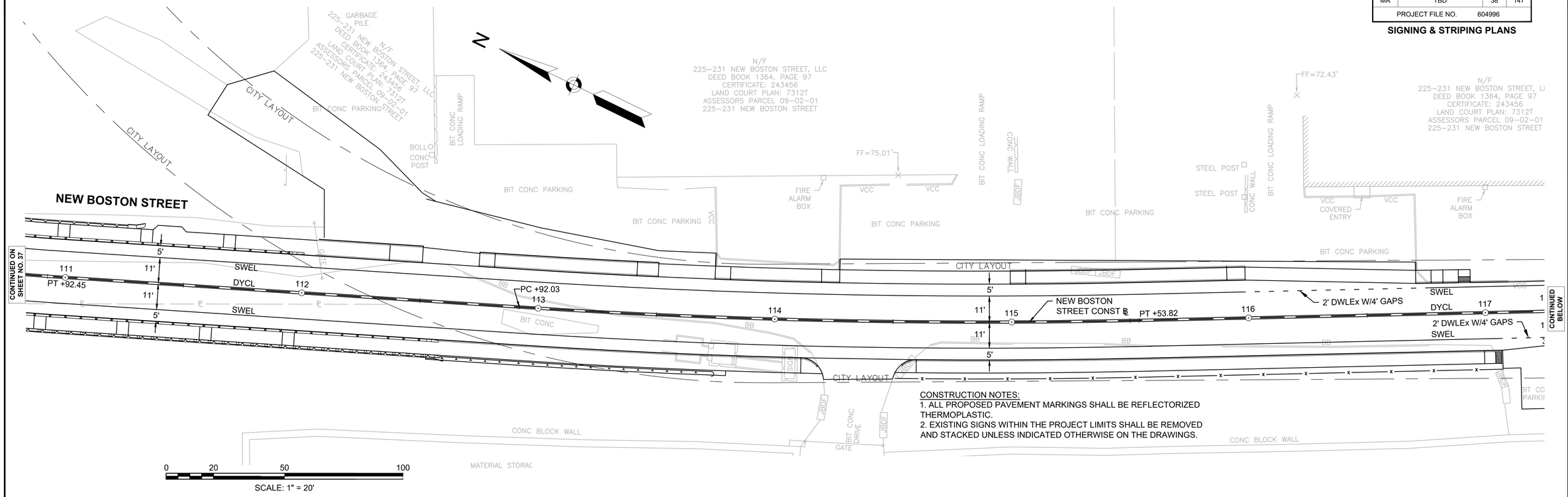

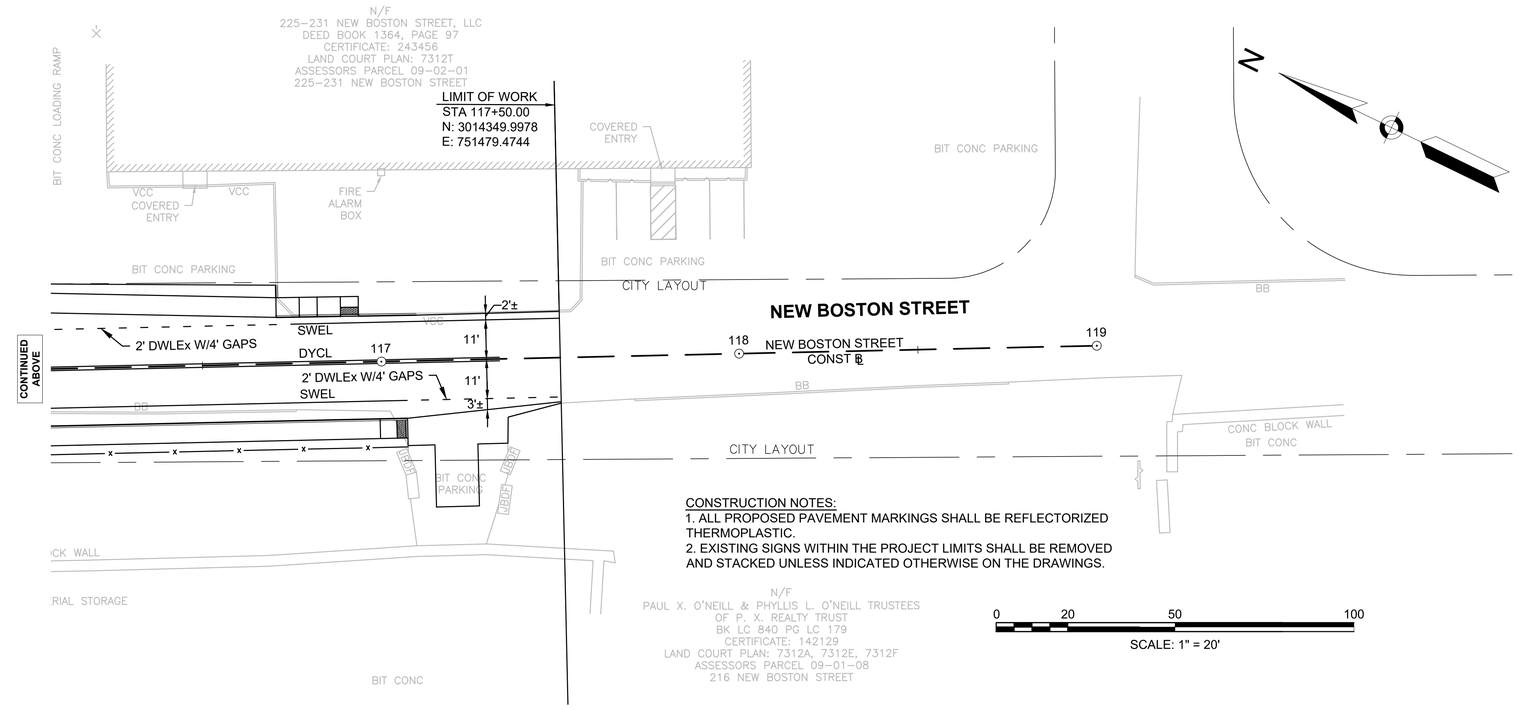

CONSTRUCTION NOTES:
1. ALL PROPOSED PAVEMENT MARKINGS SHALL BE REFLECTORIZED THERMOPLASTIC.
2. EXISTING SIGNS WITHIN THE PROJECT LIMITS SHALL BE REMOVED AND STACKED UNLESS INDICATED OTHERWISE ON THE DRAWINGS.

CONSTRUCTION NOTES:
1. ALL PROPOSED PAVEMENT MARKINGS SHALL BE REFLECTORIZED THERMOPLASTIC.
2. EXISTING SIGNS WITHIN THE PROJECT LIMITS SHALL BE REMOVED AND STACKED UNLESS INDICATED OTHERWISE ON THE DRAWINGS.

604996 HD (STRP).DWG Plotted on 3-Aug-2020 3:20 PM

WOBURN
NEW BOSTON STREET

STATE	FED. AID PROJ. NO.	SHEET NO.	TOTAL SHEETS
MA	TBD	39	147
PROJECT FILE NO.	604996		

SIGNING & STRIPING PLANS

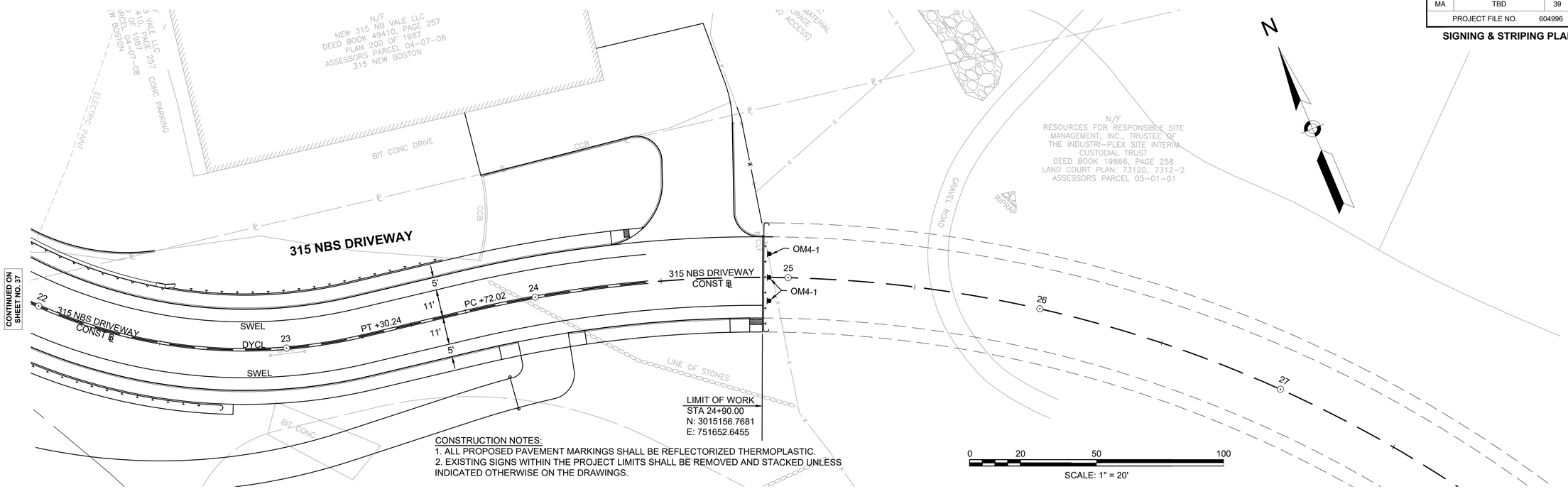

CONSTRUCTION NOTES:
1. ALL PROPOSED PAVEMENT MARKINGS SHALL BE REFLECTORIZED THERMOPLASTIC.
2. EXISTING SIGNS WITHIN THE PROJECT LIMITS SHALL BE REMOVED AND STACKED UNLESS INDICATED OTHERWISE ON THE DRAWINGS.

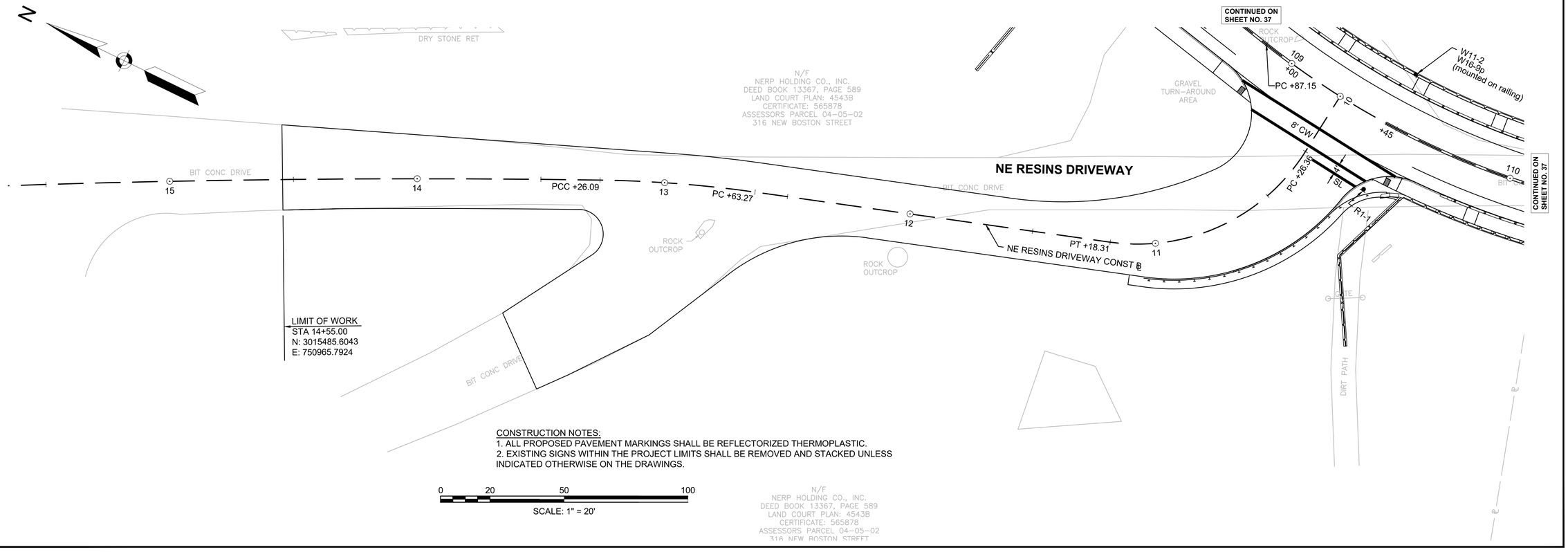

CONSTRUCTION NOTES:
1. ALL PROPOSED PAVEMENT MARKINGS SHALL BE REFLECTORIZED THERMOPLASTIC.
2. EXISTING SIGNS WITHIN THE PROJECT LIMITS SHALL BE REMOVED AND STACKED UNLESS INDICATED OTHERWISE ON THE DRAWINGS.

604996 HD (STRP).DWG Plotted on 3-Aug-2020 3:20 PM

NOTES:

1. ALL UNDERGROUND UTILITIES ARE TO BE RETAINED UNLESS OTHERWISE NOTED ON THE PLANS. ABANDONED DRAINAGE, WATER, SEWER AND PRIVATE UTILITIES FOUND IN CONFLICT WITH THE PROPOSED DESIGN CAN BE REMOVED AS DIRECTED BY THE ENGINEER.
2. THE DRAINAGE INVERTS SHOW ARE FOR BIDDING PURPOSES ONLY. ACTUAL INVERT ELEVATIONS SHALL BE CONFIRMED IN THE FIELD.
3. ADJUST ALL GAS GATES (BY OTHERS) AND WATER GATES, CURB STOPS AND SERVICES BOXES AS REQUIRED.

WOBURN
NEW BOSTON STREET

STATE	FED. AID PROJ. NO.	SHEET NO.	TOTAL SHEETS
MA	TBD	40	147
PROJECT FILE NO.	604996		

UTILITY PLANS

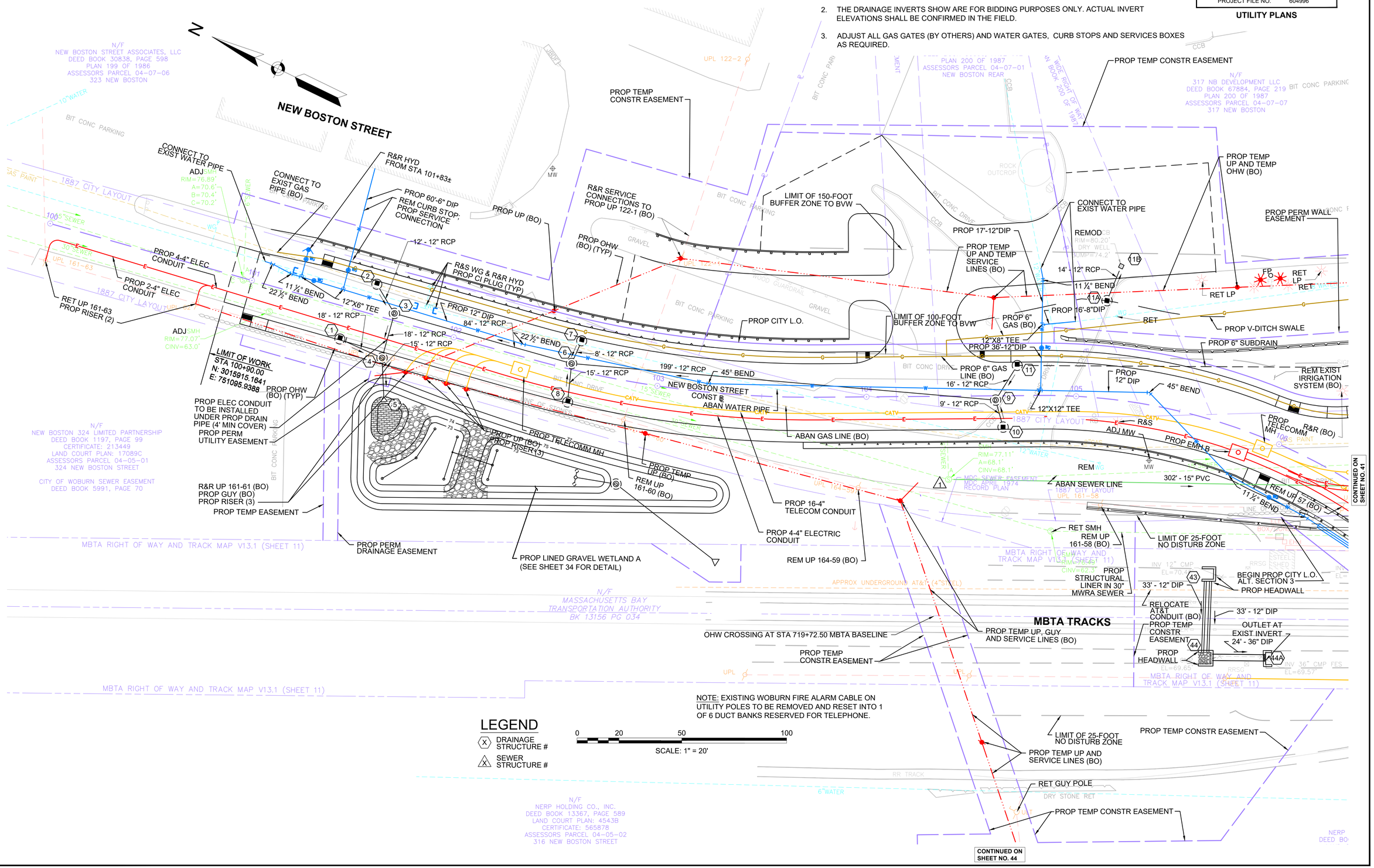

604996_HDUTIL.DWG Plotted on 3-Aug-2020 3:22 PM

WOBURN
NEW BOSTON STREET

STATE	FED. AID PROJ. NO.	SHEET NO.	TOTAL SHEETS
MA	TBD	41	147
PROJECT FILE NO.	604996		

UTILITY PLANS

NOTES:

1. ALL UNDERGROUND UTILITIES ARE TO BE RETAINED UNLESS OTHERWISE NOTED ON THE PLANS. ABANDONED DRAINAGE, WATER, SEWER AND PRIVATE UTILITIES FOUND IN CONFLICT WITH THE PROPOSED DESIGN CAN BE REMOVED AS DIRECTED BY THE ENGINEER.
2. THE DRAINAGE INVERTS SHOW ARE FOR BIDDING PURPOSES ONLY. ACTUAL INVERT ELEVATIONS SHALL BE CONFIRMED IN THE FIELD.
3. ADJUST ALL GAS GATES (BY OTHERS) AND WATER GATES, CURB STOPS AND SERVICES BOXES AS REQUIRED.

CONTINUED ON SHEET NO. 43

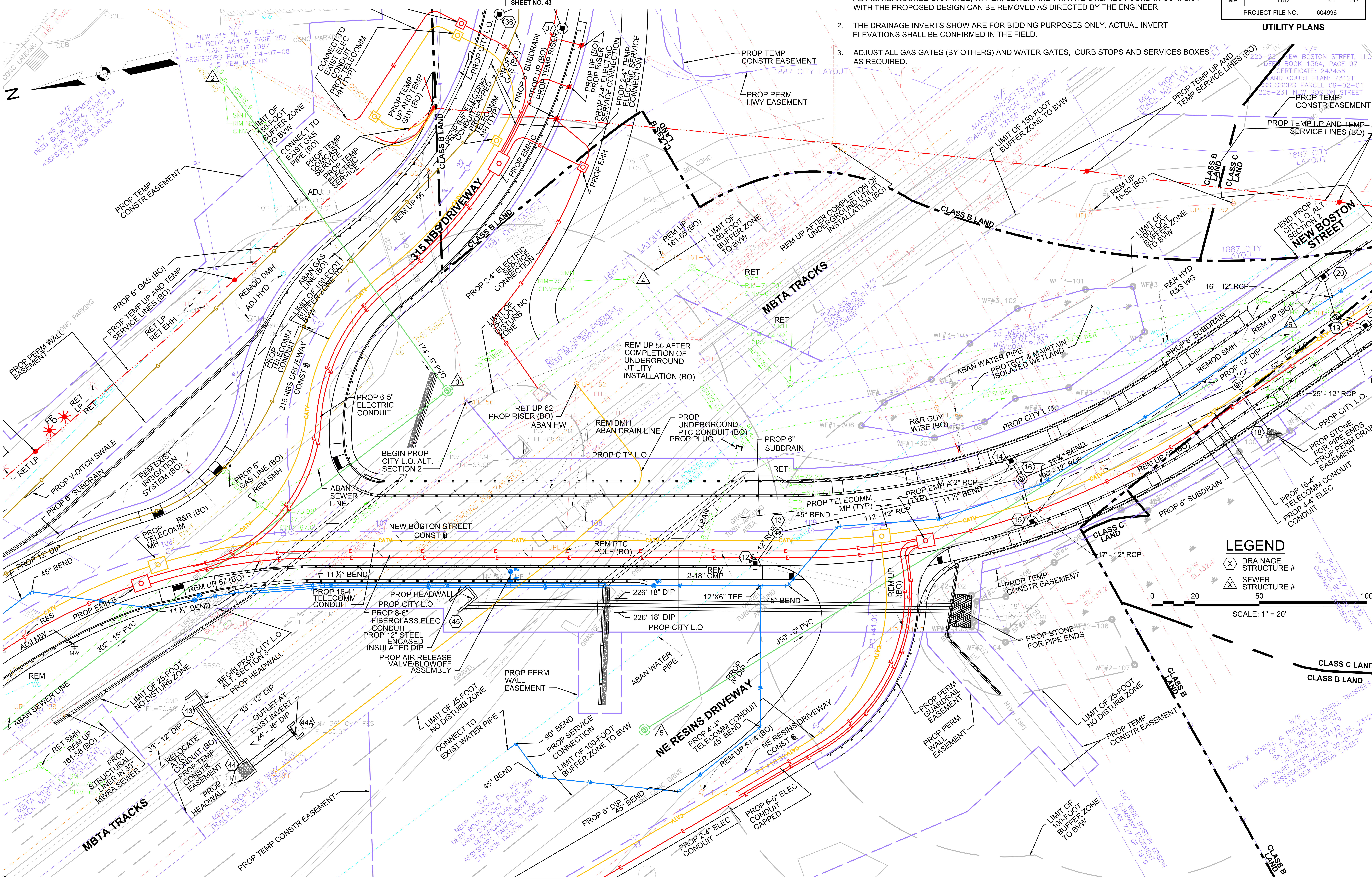

CONTINUED ON SHEET NO. 40
CONTINUED ON SHEET NO. 42
CONTINUED ON SHEET NO. 44

604996_HD(UTIL).DWG Plotted on 3-Aug-2020 3:22 PM

WOBURN
NEW BOSTON STREET

STATE	FED. AID PROJ. NO.	SHEET NO.	TOTAL SHEETS
MA	TBD	42	147
PROJECT FILE NO.	604996		

UTILITY PLANS

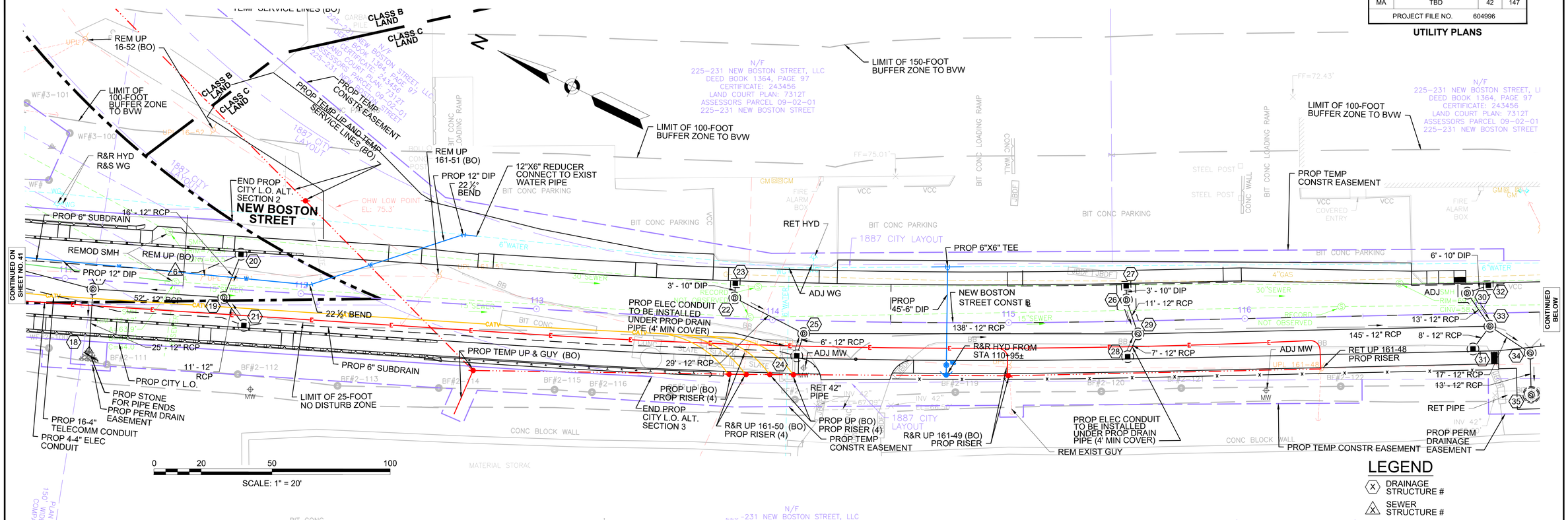

LEGEND

(X) DRAINAGE STRUCTURE #

(X) SEWER STRUCTURE #

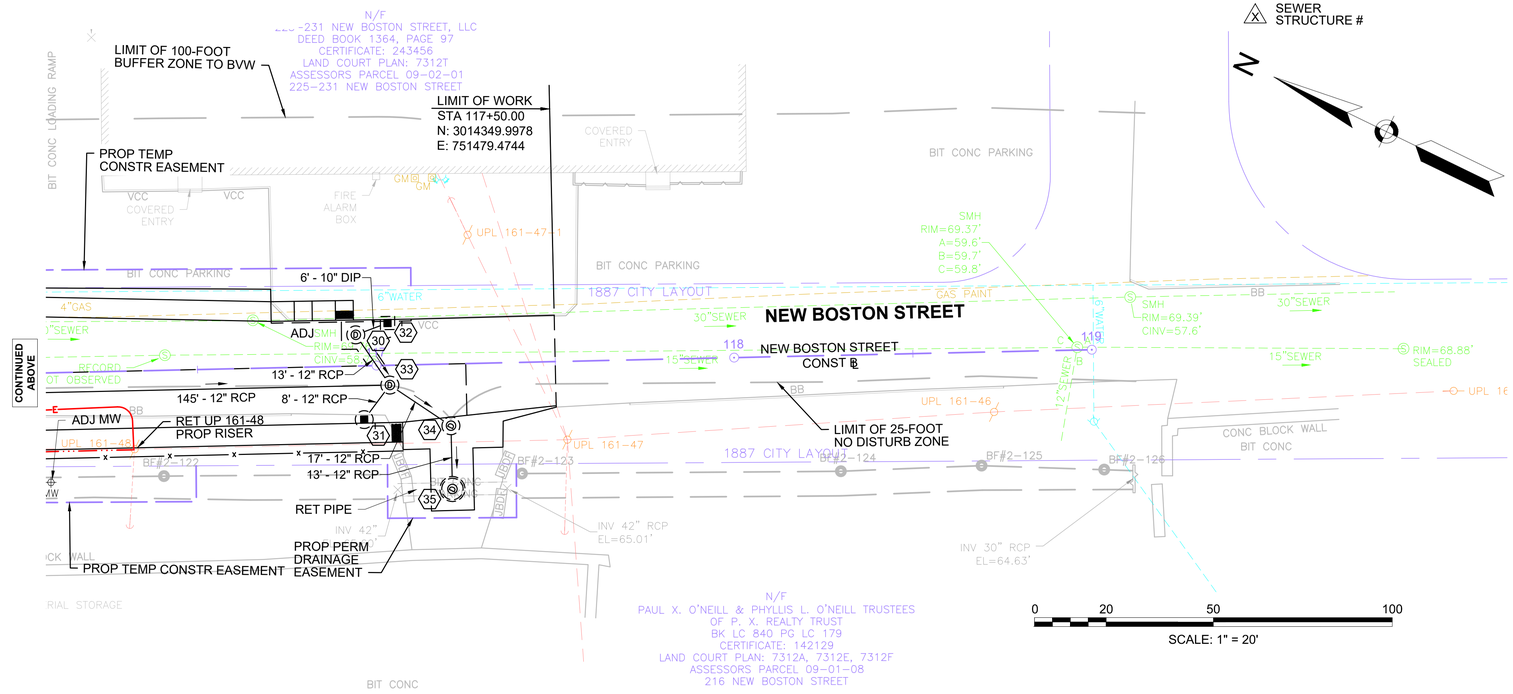

NOTES:

1. ALL UNDERGROUND UTILITIES ARE TO BE RETAINED UNLESS OTHERWISE NOTED ON THE PLANS. ABANDONED DRAINAGE, WATER, SEWER AND PRIVATE UTILITIES FOUND IN CONFLICT WITH THE PROPOSED DESIGN CAN BE REMOVED AS DIRECTED BY THE ENGINEER.
2. THE DRAINAGE INVERTS SHOW ARE FOR BIDDING PURPOSES ONLY. ACTUAL INVERT ELEVATIONS SHALL BE CONFIRMED IN THE FIELD.
3. ADJUST ALL GAS GATES (BY OTHERS) AND WATER GATES, CURB STOPS AND SERVICES BOXES AS REQUIRED.
4. WITHIN INDUSTRI-PLEX LIMITS, CONTRACTOR SHALL EXCAVATE EXISTING SOIL SURROUNDING PROPOSED UTILITY POLES AND BACKFILL WITH ORDINARY BORROW. SEE SHEET 73 FOR DETAIL.

604996_HD(UTIL).DWG Plotted on 3-Aug-2020 3:22 PM

NOTES:

1. ALL UNDERGROUND UTILITIES ARE TO BE RETAINED UNLESS OTHERWISE NOTED ON THE PLANS. ABANDONED DRAINAGE, WATER, SEWER AND PRIVATE UTILITIES FOUND IN CONFLICT WITH THE PROPOSED DESIGN CAN BE REMOVED AS DIRECTED BY THE ENGINEER.
2. THE DRAINAGE INVERTS SHOW ARE FOR BIDDING PURPOSES ONLY. ACTUAL INVERT ELEVATIONS SHALL BE CONFIRMED IN THE FIELD.
3. ADJUST ALL GAS GATES (BY OTHERS) AND WATER GATES, CURB STOPS AND SERVICES BOXES AS REQUIRED.

WOBURN
NEW BOSTON STREET

STATE	FED. AID PROJ. NO.	SHEET NO.	TOTAL SHEETS
MA	TBD	43	147
PROJECT FILE NO.	604996		

UTILITY PLANS

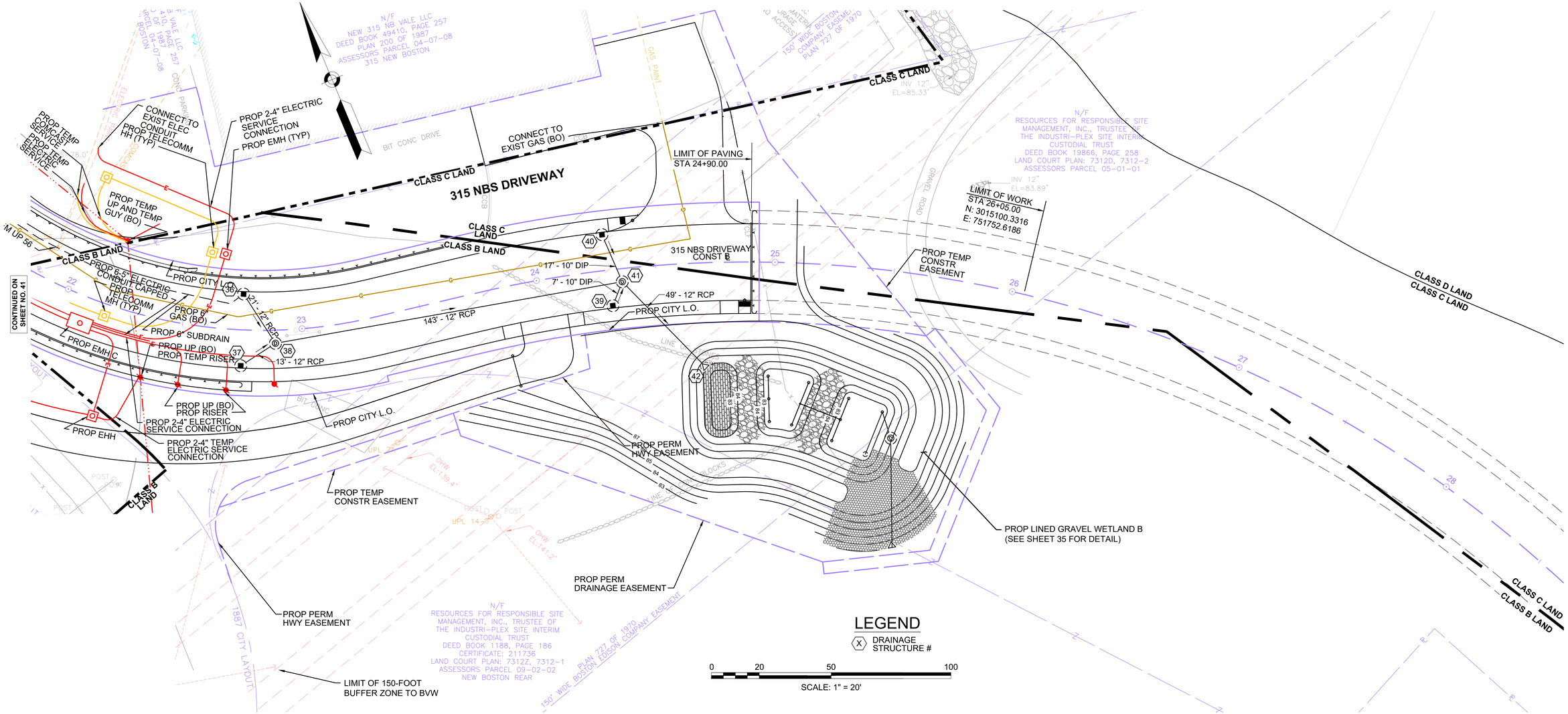

604996_HDI(UTIL).DWG Plotted on 3-Aug-2020 3:22 PM

WOBURN
NEW BOSTON STREET

STATE	FED. AID PROJ. NO.	SHEET NO.	TOTAL SHEETS
MA	TBD	44	147
PROJECT FILE NO.	604996		

UTILITY PLANS

NOTES:

1. ALL UNDERGROUND UTILITIES ARE TO BE RETAINED UNLESS OTHERWISE NOTED ON THE PLANS. ABANDONED DRAINAGE, WATER, SEWER AND PRIVATE UTILITIES FOUND IN CONFLICT WITH THE PROPOSED DESIGN CAN BE REMOVED AS DIRECTED BY THE ENGINEER.
2. THE DRAINAGE INVERTS SHOW ARE FOR BIDDING PURPOSES ONLY. ACTUAL INVERT ELEVATIONS SHALL BE CONFIRMED IN THE FIELD.
3. ADJUST ALL GAS GATES (BY OTHERS) AND WATER GATES, CURB STOPS AND SERVICES BOXES AS REQUIRED.

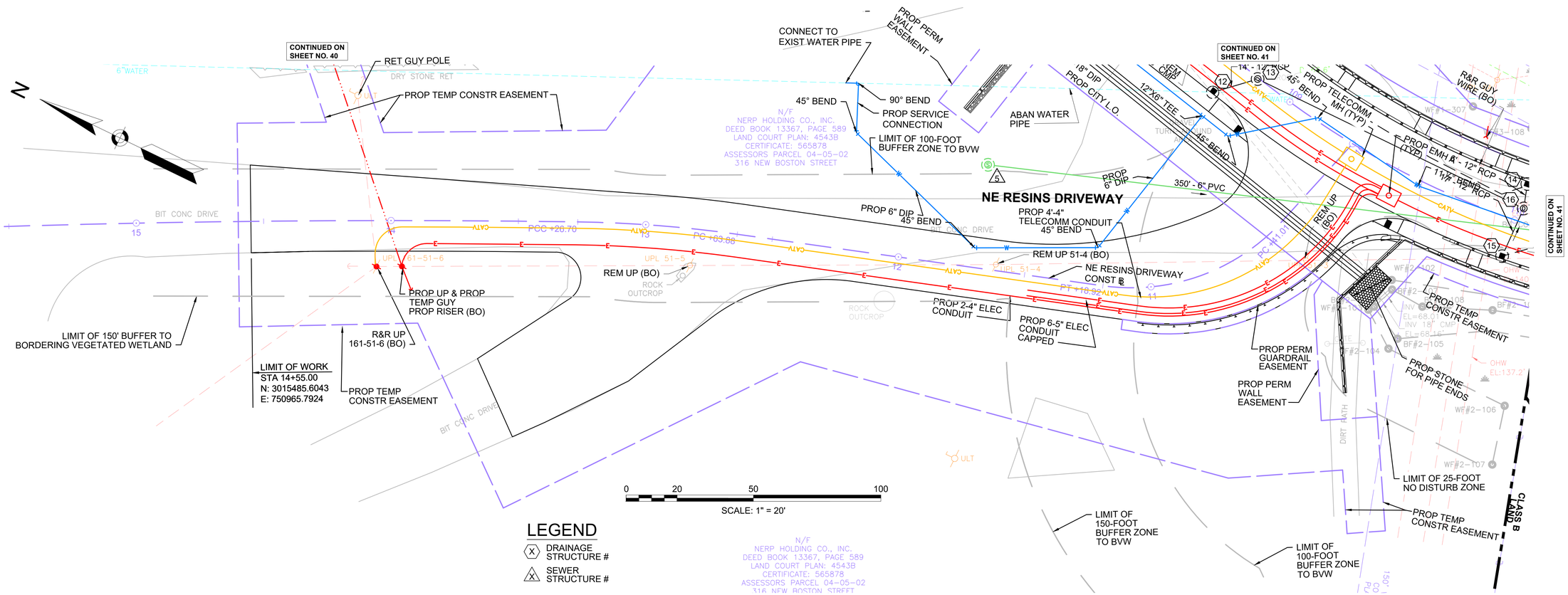

604996_HD(UTIL).DWG Plotted on 3-Aug-2020 3:22 PM

WOBURN
NEW BOSTON STREET

STATE	FED. AID PROJ. NO.	SHEET NO.	TOTAL SHEETS
MA	TBD	45	147
PROJECT FILE NO.	604996		

UTILITY PLANS

604996_HD(UTIL).DWG Plotted on 3-Aug-2020 3:22 PM

NEW BOSTON STREET DRAINAGE STRUCTURE DATA

NO.	TYPE	STATION	RIM ELEV.	INV. IN	INV. OUT	REMARKS
1	CBCI	101+48.0 15.5 RT	77.11		73.60 (4)	ECCENTRIC
2	CBCI	101+57.9 14.4 LT	77.36		73.70 (3)	ECCENTRIC
3	DMH	101+69.7 3.3 LT	77.67	(2) 73.60 (6) 73.60	73.50 (4)	
4	DMH	101+69.8 18.7 RT	77.94	(3) 73.40 (1) 73.40	73.35 (5)	
5	FES	101+76.4 38.6 RT	74.50	(4) 73.25		
6	DMH	102+57.7 2.8 LT	79.75	(9) 76.10 (7) 75.20 (8) 74.40	74.30 (3)	
7	CBCI	102+59.9 14.4 LT	79.58		75.30 (6)	ECCENTRIC
8	CBCI	102+60.0 15.6 RT	79.56		74.60 (6)	ECCENTRIC
9	DMH	104+61.6 2.0 RT	88.89	(11) 84.70 (10) 83.65	83.55 (6)	
10	CBCI	104+65.1 15.0 RT	88.80		83.80 (9)	
11B	EX CB	105+14.8 63.6 LT	82.67	(11A) 77.20		REMOD
11A	DI	105+10.5 46.6 LT	80.90		77.40 (11B)	TYPE DF
11	CBCI	104+72.0 14.4 LT	89.16		84.90 (9)	ECCENTRIC
12	CBCI	108+73.9 15.6 RT	97.82		92.70 (13)	ECCENTRIC
13	DMH	108+84.5 0.5 RT	97.62	(12) 92.30	92.20 (16)	
14	CBCI	110+00.0 15.0 LT	89.75		85.50 (16)	
15	CBCI	110+00.1 15.0 RT	89.75		84.70 (16)	
16	DMH	110+01.9 5.5 LT	89.80	(13) 85.50 (15) 84.50 (14) 85.40	84.40 (17)	
17	DMH	111+12.1 3.8 RT	82.13	(16) 78.00 (19) 72.25	72.15 (18)	9 TO 14 FOOT DEPTH
18	FES	111+12.1 30.5 RT	73.25	(17) 72.00		
19	DMH	111+67.6 3.7 RT	78.54	(20) 73.30 (21) 72.65	72.55 (17)	

*ALL OFFSETS TO CENTER OF STRUCTURE

NEW BOSTON STREET DRAINAGE STRUCTURE DATA

NO.	TYPE	STATION	RIM ELEV.	INV. IN	INV. OUT	REMARKS
20	CBCI	111+73.7 15.0 LT	77.97		73.60 (19)	
21	CBCI	111+76.8 15.0 RT	77.80		72.80 (19)	
22	CB	113+83.7 8.7 LT	72.17	(23) 69.30	67.90 (25)	PROP F&C
23	GICI	113+83.8 15.0 LT	72.04		69.40 (22)	
24	CB	114+10.7 15.0 RT	71.94		67.80 (25)	
25	DMH	114+13.4 5.5 RT	72.12	(22) 67.60 (24) 67.60	67.50 (29)	
26	CB	115+50.1 9.0 LT	70.90	(27) 68.10	66.90 (29)	PROP F&C
27	GICI	115+50.1 15.0 LT	70.78		68.20 (26)	
28	CBCI	115+50.1 15.0 RT	70.78		66.80 (29)	
29	DMH	115+54.7 5.5 RT	70.91	(26) 66.70 (28) 66.70 (25) 66.80	66.60 (33)	
30	CB	116+94.4 8.7 LT	69.89	(32) 67.25	66.00 (33)	PROP F&C
31	CBCI	116+96.3 15.0 RT	69.76		65.90 (33)	
32	GICI	117+03.4 11.8 LT	69.79		67.30 (30)	
33	DMH	117+03.7 5.5 RT	69.91	(30) 65.80 (31) 65.80 (29) 65.80	65.70 (34)	
34	DMH	117+20.5 17.3 RT	69.67	(33) 65.60	65.50 (35)	
35	DMH	117+20.5 35.0 RT	70.12	(34) 65.40 (EX)65.30	65.30	6' DIA BUILD OVER EXIST PIPE
43	HW	105+93.5 73.1 RT			70.5 (44)	
44A	HW	106+51.7 93.1 RT		69.57 (44)	69.57	
44	HW	106+11.8 104.2 RT		69.65 (43)	69.65 (44A)	
45	HW	107+39.2 34.5 RT			69.45	

*ALL OFFSETS TO CENTER OF STRUCTURE

315 NBS DRIVEWAY DRAINAGE STRUCTURE DATA

NO.	TYPE	STATION	RIM ELEV.	INV. IN	INV. OUT	REMARKS
36	CBCI	22+74.9 15.0 LT	89.09		85.50 (38)	
37	CBCI	22+75.0 15.0 RT	89.08		85.45 (38)	
38	DMH	22+88.8 5.5 RT	89.07	(36) 85.30 (37) 85.30	85.20 (41)	
39	CBCI	24+30.5 15.0 RT	87.96		84.45 (41)	
40	CBCI	24+29.4 15.0 LT	87.97		84.60 (41)	
41	DMH	24+35.6 5.5 RT	88.12	(40) 84.35 (39) 84.35 (38) 84.35	84.30 (42)	
42	FES	24+69.8 43.9 RT	85.25	(41) 84.00		

*ALL OFFSETS TO CENTER OF STRUCTURE

NEW BOSTON STREET SEWER STRUCTURE DATA

NO.	TYPE	STATION	RIM ELEV.	INV. IN	INV. OUT	REMARKS
1	EX SMH	104+38.9 39.7 RT	80.96		68.10 (3)	REBUILD
2	EX SMH	106+46.1 211.8 LT	83.35		79.70 (3)	RETAIN
3	SMH	107+30.6 65.4 LT	75.26	(1) 66.50 (2) 70.00	66.50 (4)	CONNECT TO EXIST
4	EX SMH	108+16.3 117.4 LT	75.69	(3) 66.00	66.00 (EX-1)	RETAIN
5	SMH	108+22.4 92.6 RT	82.43		67.50 (6) EXIST (EX)	FIELD LOCATE SMH OVER EXIST 8" SEWER. VERIFY INVERT PRIOR TO INSTALLATION
6	EX SMH	111+46.7 1.4 LT	79.85	(5) 65.50		

*ALL OFFSETS TO CENTER OF STRUCTURE

NOTES:
1. THE DRAINAGE INVERTS SHOWN ARE FOR BIDDING PURPOSES ONLY. ACTUAL INVERT ELEVATIONS SHALL BE CONFIRMED IN THE FIELD BY THE CONTRACTOR.
2. RIM ELEVATIONS AND OFFSETS ARE TAKEN FROM THE CENTER OF THE STRUCTURE.
3. ALL NEW CATCH BASINS SHALL HAVE A 4' SUMP AND HOOD.

WOBURN
NEW BOSTON STREET

STATE	FED. AID PROJ. NO.	SHEET NO.	TOTAL SHEETS
MA	TBD	46	147
PROJECT FILE NO.	604996		

GROUND IMPROVEMENT PLAN

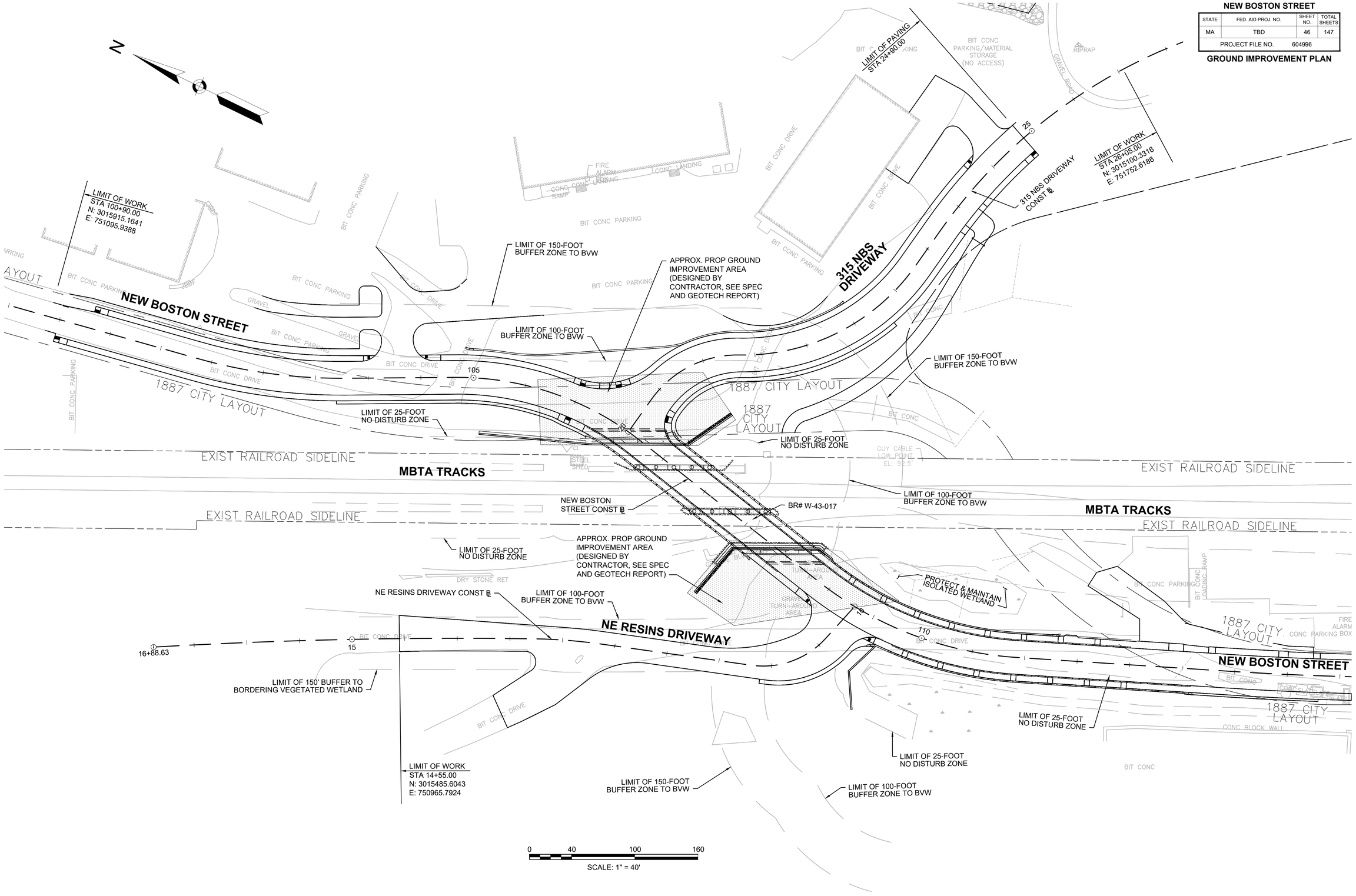

604996_HD(GROUND).DWG Plotted on 3-Aug-2020 3:23 PM

WOBURN
NEW BOSTON STREET

STATE	FED. AID PROJ. NO.	SHEET NO.	TOTAL SHEETS
MASS.	TBD	47	147
PROJECT FILE NO. 604996			

EPA LAND COVER IMPACT PLANS

LEGEND

EXISTING COVER TO BE IMPACTED	EXISTING COVER TO BE RETAINED

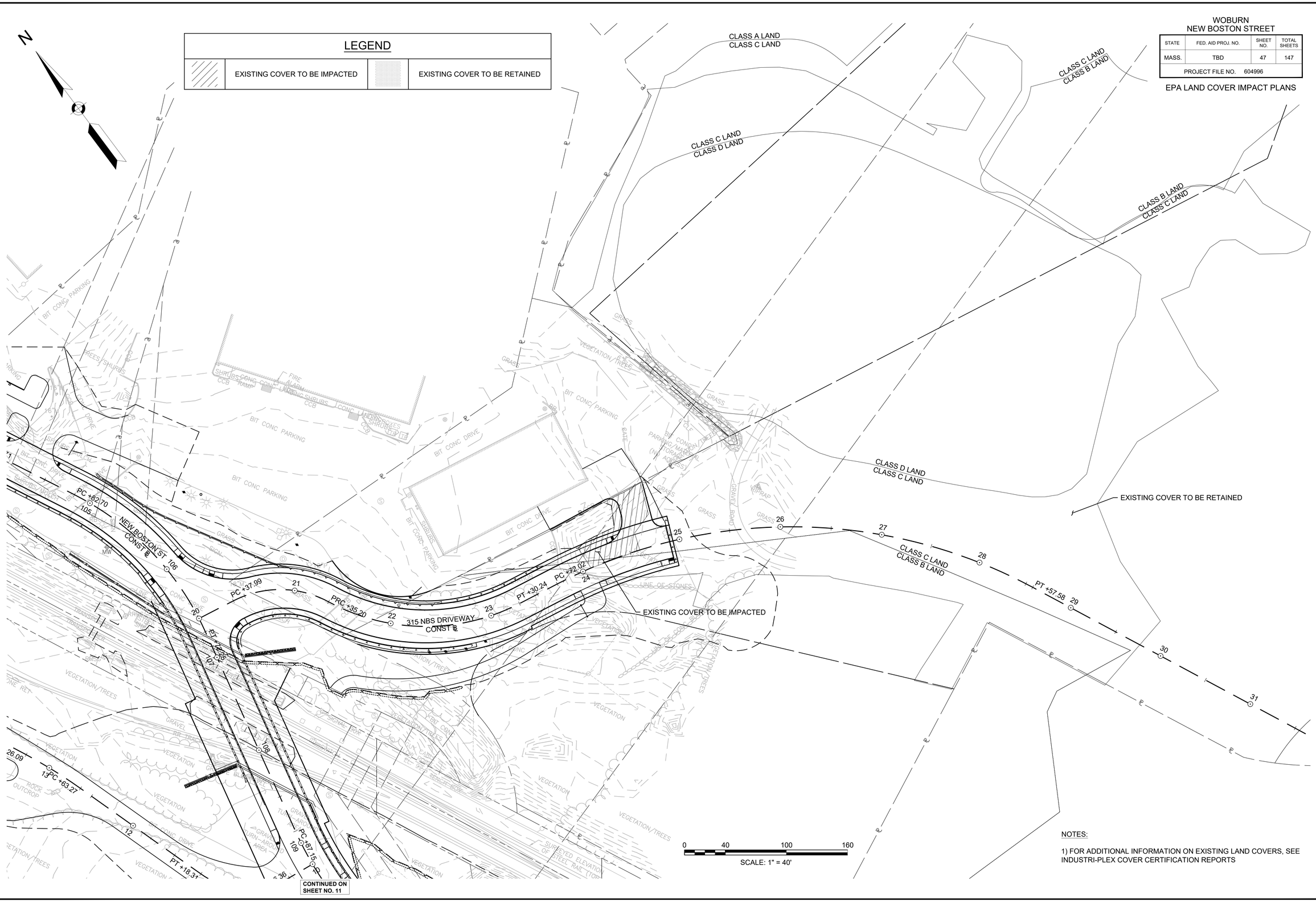

CONTINUED ON SHEET NO. 11

NOTES:

1) FOR ADDITIONAL INFORMATION ON EXISTING LAND COVERS, SEE INDUSTRI-PLEX COVER CERTIFICATION REPORTS

604996_HD(EPA-COVER).DWG Plotted on 3-Aug-2020 3:25 PM

WOBURN
NEW BOSTON STREET

STATE	FED. AID PROJ. NO.	SHEET NO.	TOTAL SHEETS
MASS.	TBD	48	147
PROJECT FILE NO. 604996			

EPA LAND COVER IMPACT PLANS

LEGEND

	EXISTING COVER TO BE IMPACTED		EXISTING COVER TO BE RETAINED

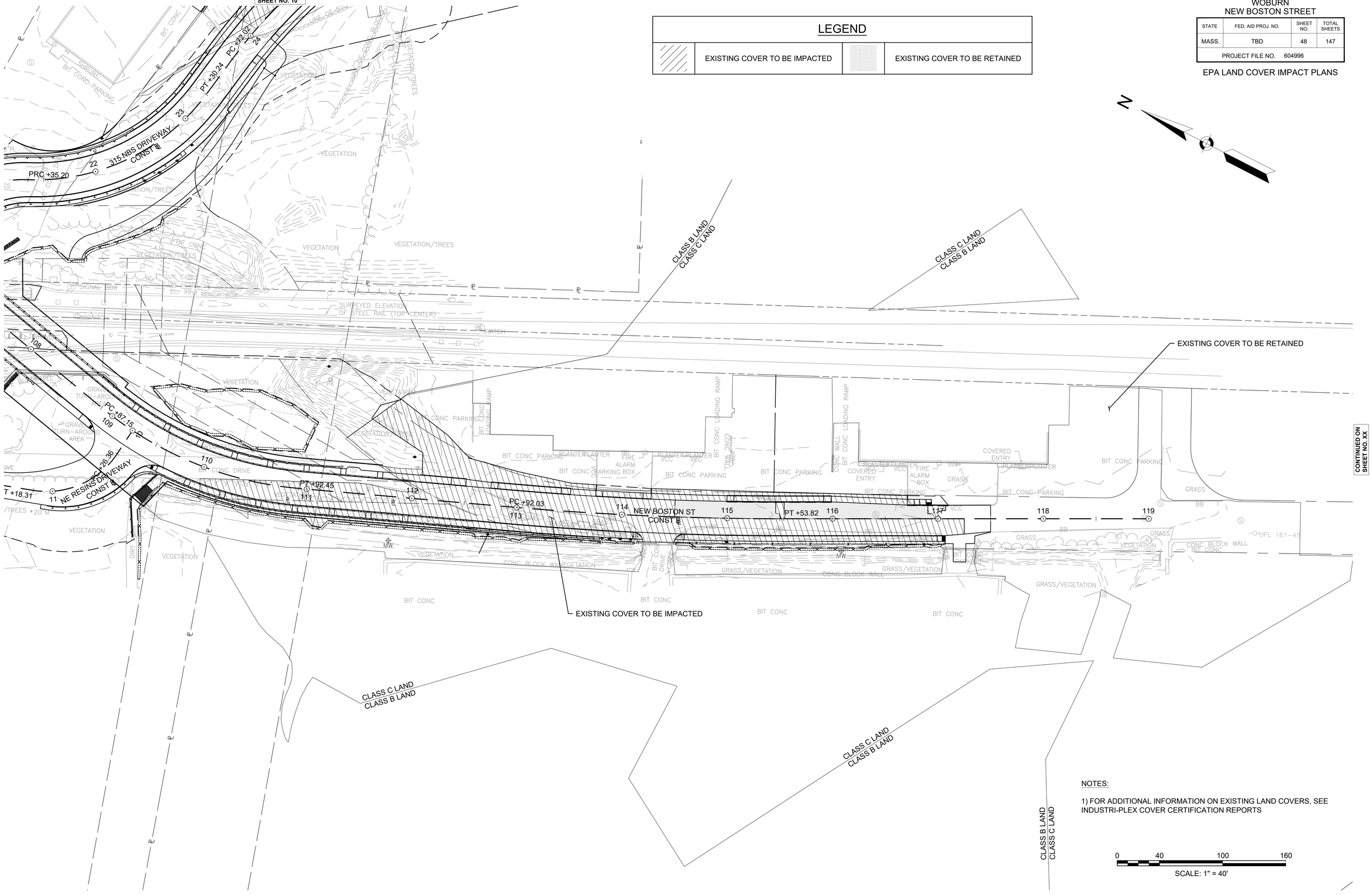

NOTES:

1) FOR ADDITIONAL INFORMATION ON EXISTING LAND COVERS, SEE INDUSTRI-PLEX COVER CERTIFICATION REPORTS

0 40 100 160

SCALE: 1" = 40'

604996_HD(EPA-COVER).DWG Plotted on 3-Aug-2020 3:25 PM

GENERAL NOTES

1. ALL CONSTRUCTION SIGNING, TEMPORARY TRAFFIC CONTROL DEVICES, AND ROADSIDE ELEMENTS SHALL CONFORM WITH THE 2009 MANUAL ON UNIFORM TRAFFIC CONTROL DEVICES (MUTCD) AS AMENDED, THE MASSDOT STANDARD DETAILS AND DRAWINGS FOR THE DEVELOPMENT OF TEMPORARY TRAFFIC CONTROL PLANS, THE LATEST REVISIONS OF THE AMERICAN ASSOCIATION OF STATE HIGHWAY AND TRANSPORTATION OFFICIALS, (AASHTO) ROADSIDE DESIGN GUIDE, AASHTO POLICY ON GEOMETRIC DESIGN OF HIGHWAYS AND STREETS, AND NATIONAL COOPERATIVE HIGHWAY RESEARCH PROGRAM (NCHRP) REPORT 350 OR THE AASHTO MANUAL FOR ASSESSING SAFETY HARDWARE (MASH).
2. WORK HOURS SHALL BE AS NOTED IN THE PROJECT SPECIFICATION AND AS APPROVED BY MASSDOT, MBTA AND THE CITY OF WOBURN.
3. NO WORK SHALL OCCUR WITHIN THE PUBLIC WAY THE DAY BEFORE, AFTER OR ON A STATE RECOGNIZED HOLIDAY UNLESS OTHERWISE APPROVED BY THE ENGINEER.
4. ALL DRUMS OUTSIDE TAPERS SHALL BE SET AT 20' ON CENTER MAX. UNLESS OTHERWISE NOTED OR ADJUSTED BY THE ENGINEER.
5. ALL DRUMS SHALL BE APPROXIMATELY PLACED AND MOVED AS NECESSARY TO MAINTAIN SAFE AND REASONABLE ABUTTER ACCESS. WORK MAY REQUIRE ADDITIONAL SIGNS, DRUMS AND OTHER TRAFFIC CONTROL DEVICES, GRADING AND TEMPORARY PAVEMENT FOR PASSAGE OF PEDESTRIAN, VEHICULAR AND EMERGENCY TRAFFIC THROUGH THE WORK AREAS, BOTH DURING AND AFTER WORKING HOURS, TO MAINTAIN SUCH ACCESS.
6. THE FIRST 10 DRUMS ON TAPERS SHALL BE REFLECTORIZED DRUMS WITH SEQUENTIAL FLASHING WARNING LIGHTS AND SHALL BE OPERATING, AT A MINIMUM, BETWEEN DUSK AND DAWN, WHEN TAPER IS DEPLOYED.
7. REFLECTORIZED CONES SHALL BE A MINIMUM OF 36 INCHES IN HEIGHT.
8. CONES MAY BE USED IN LIEU OF DRUMS OUTSIDE OF TAPER AREAS.
9. THE CONTRACTOR SHALL NOTIFY EACH ABUTTER AT LEAST 24 HOURS IN ADVANCE OF THE START OF ANY WORK THAT WILL REQUIRE THE TEMPORARY CLOSURE OR RESTRICTION OF ACCESS.
10. FOR DROP-OFFS 3" OR LESS WITHIN THE CLEAR ZONE, CONDITION MAY BE MITIGATED WITH W8-9 (LOW SHOULDER) SIGN OR TEMPORARY CHANNELIZATION DEVICES. FOR DROP-OFFS GREATER THAN 3" BUT NO MORE THAN 36", DETERMINE WHETHER IT IS MORE COST EFFECTIVE TO INSTALL BOTH W8-9 SIGN AND TEMPORARY CHANNELIZATION DEVICES IN ACCORDANCE WITH MASSDOT WORK ZONE SAFETY GUIDE OR W8-9 SIGN WITH A 2H:1V (MIN) WEDGE OR TO REMOVE THE HAZARD. FOR DROP-OFFS 36" OR GREATER USE TEMPORARY BARRIER IN ACCORDANCE WITH MASSDOT WORK ZONE POSITIVE PROTECTION GUIDELINES.
11. CONSTRUCTION CLEAR ZONE SHALL BE IN ACCORDANCE WITH MASSDOT BOSTON TRAFFIC GUIDELINES AS: 4' IF POSTED SPEED IS LESS THAN 35 MPH
12. ALL TEMP BARRIERS SHALL MEET OR EXCEED MASS TL-2 REQUIREMENTS WITH A MAXIMUM DYNAMIC DEFLECTION OF 3 FEET.
13. THE CONTRACTOR SHALL PROVIDE TEMPORARY IMPACT ATTENUATORS TO PROTECT ALL BLUNT-ENDS OF TEMPORARY BARRIER OR AS REQUIRED BY THE ENGINEER. TEMPORARY IMPACT ATTENUATORS SHALL BE DESIGNED BY THE CONTRACTOR AND SUBMITTED TO THE ENGINEER FOR APPROVAL PRIOR TO THE START OF WORK. ALL TEMPORARY IMPACT ATTENUATORS SHALL BE DESIGNED TO MEET OR EXCEED MASH TEST LEVEL 2 (TL-2).
14. 11' MINIMUM LANE WIDTHS SHALL BE MAINTAINED UNLESS OTHERWISE NOTED.
15. TEMPORARY TRAFFIC CONTROL DEVICES AND SIGNS SHALL BE COVERED OR REMOVED DURING NON-WORKING HOURS WHEN NOT IN USE.
16. SIGNS INSTALLED ON PORTABLE STANDS REQUIRE 12 INCH MINIMUM MOUNTING HEIGHT FROM THE ROADWAY SURFACE TO THE BOTTOM OF THE SIGN.
17. SIGNS INSTALLED ON PORTABLE STANDS PLACED AMONG CHANNELIZATION DEVICES REQUIRE A 36 INCH MINIMUM MOUNTING HEIGHT FROM THE ROADWAY SURFACE TO THE BOTTOM OF THE SIGN.
18. SIGNS MOUNTED ON POSTS REQUIRE A MINIMUM 84 INCH MOUNTING HEIGHT FROM THE ROADWAY OR SIDEWALK SURFACE TO THE BOTTOM OF THE SIGN. CONTRACTOR SHALL MAINTAIN A MINIMUM SIDEWALK HORIZONTAL CLEAR WIDTH OF 36" AT ALL TIMES.
19. ALL SIGNS SHALL BE MOUNTED ON THEIR OWN NCHRP 350 AND/OR MASH CRASH TESTED SIGN SUPPORTS AND INSTALLED IN ACCORDANCE WITH THE MUTCD. SIGNS SHALL NOT BE MOUNTED ON DRUMS OR CONES.
20. W21-7 SIGNS SHALL BE INSTALLED IN ADVANCE (100' MIN) OF AREAS WHERE UTILITY CASTINGS HAVE BEEN RAISED IN ADVANCE OF PAVING OPERATIONS OR AS REQUESTED BY THE ENGINEER.
21. W8-15 SIGNS SHALL BE INSTALLED IN ADVANCE (100' MIN) OF PAVEMENT MILLING AREAS OR AS REQUESTED BY THE ENGINEER.
22. TEMPORARY MARKINGS SHALL BE WATER-BORNE PAINT OR SURFACE-APPLIED REMOVEBLE TAPE, AS APPROVED BY THE ENGINEER. TEMPORARY MARKINGS MAY BE NECESSARY FOR CONSTRUCTION STAGING AS DIRECTED BY THE ENGINEER.
23. ALL TEMPORARY DOUBLE YELLOW LINES (DBYL) SHALL BE 6 INCHES WIDE.
24. W20-1c, MA-R2-10a AND MA-R2-10e SIGNS SHOWN ON ADVANCE SIGN SCHEMATIC MAY BE USED IN LIEU OF THOSE SIGNS SHOWN ON TYPICAL DETAILS ON THE TEMPORARY TRAFFIC CONTROL PLANS IF MINIMUM SIGN SPACING IS MET.
25. CONTRACTOR SHALL SECURE WORK AREAS BY APPROPRIATE MEANS AT NO COST TO MASSDOT, TO PREVENT UNAUTHORIZED ACCESS AT ALL TIMES.
26. THERE IS NO DESIGNATED BICYCLE LANE ON THE ROADWAY WITHIN THE PROJECT LIMITS. BICYCLES ARE EXPECTED TO SHARE THE ROAD WITH GENERAL VEHICULAR TRAFFIC.
27. NIGHTTIME WORK SHALL REQUIRE PRIOR APPROVAL FROM MASSDOT , THE CITY AND MBTA
28. ILLUMINATION REQUIRED FOR NIGHTTIME WORK APPROVED BY THE ENGINEER SHALL BE DIFFUSED OR ANTI-GLARE LIGHTING AND IN ACCORDANCE WITH MASSDOT STANDARDS.
29. WHEN UTILIZING TYPICAL TRAFFIC CONTROL DETAILS OR STAGING SETUPS, COVER EXISTING CONFLICTING ADVANCE WARNING SIGNS AS REQUIRED TO COMPLETE THE WORK.
30. CONTRACTOR SHALL NOT ALLOW PUBLIC ACCESS ON PORTIONS OF NEWLY BUILT SIDEWALK UNTIL ALL SIDEWALKS WITHIN THE PROJECT LIMITS ARE FULLY CONSTRUCTED AND ADAAG COMPLIANT OR AS DIRECTED BY THE ENGINEER.

LEGEND

	FLAGGER
	REFLECTORIZED DRUM
	REFLECTORIZED DRUMS WITH SEQUENTIAL FLASHING WARNING LIGHTS (SEE NOTE 6)
	TEMPORARY CONSTRUCTION SIGN
	TRAFFIC CONE
	TYPE III BARRICADE
	TEMPORARY BARRIER/ WORK ZONE ENCLOSURE
	WORK AREA (PUBLIC ACCESS RESTRICTED)
	TRANSITION/BUFFER AREAS
	TRAFFIC FLOW
NTS	NOT TO SCALE

ADVANCE SIGN SPACING

ROADWAY	DISTANCE BETWEEN SIGNS (FEET)			
	A	B	C	D
NEW BOSTON ST	100	50	100	100

LANE TAPER LENGTH FORMULA

L= TAPER LENGTH IN FEET

W= WIDTH OF ROADWAY TO BE SHIFTED OR REDIRECTED IN FEET

S= POSTED SPEED LIMIT IN MPH

POSTED SPEED
40 MPH OR LESS
$L=\frac{WS^2}{60}$

BUFFER SPACING

SPEED (MPH)	DISTANCE (FEET)
15	80
20	115
25	155
30	200

WOBURN
NEW BOSTON STREET

STATE	FED. AID PROJ. NO.	SHEET NO.	TOTAL SHEETS
MA	TBD	49	147
PROJECT FILE NO.	604996		

TEMPORARY TRAFFIC CONTROL PLANS
GENERAL NOTES AND LEGEND

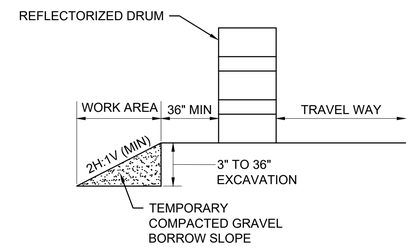

NOTE:
1. CONTRACTOR SHALL INSTALL W8-9 SIGN ON ALL ROADWAYS 350 FT IN ADVANCE OF THE START OF DROP-OFF CONDITION.

TYPICAL ROADWAY DROP-OFF PROTECTION

SCALE: NTS

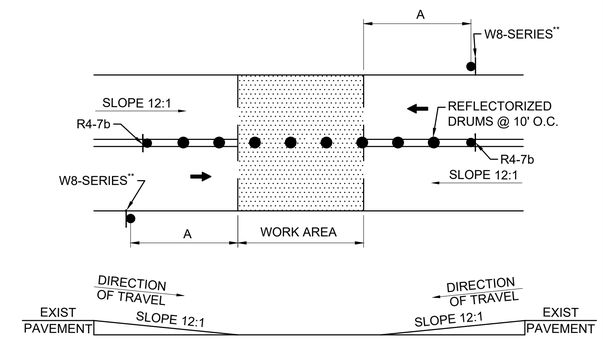

NOTES:
1. SQUARE OFF THE FULL WIDTH OF THE ROADWAY AT THE END OF WORK DAY
2. ** CONTRACTOR SHALL INSTALL W8-1, W8-3, OR W8-8 SIGN, AS APPROPRIATE, ON ALL ROADWAYS IN ADVANCE OF THE TRANSITION UNLESS OTHERWISE DIRECTED BY THE ENGINEER.

TEMPORARY PAVEMENT TRANSITION

SCALE: NTS

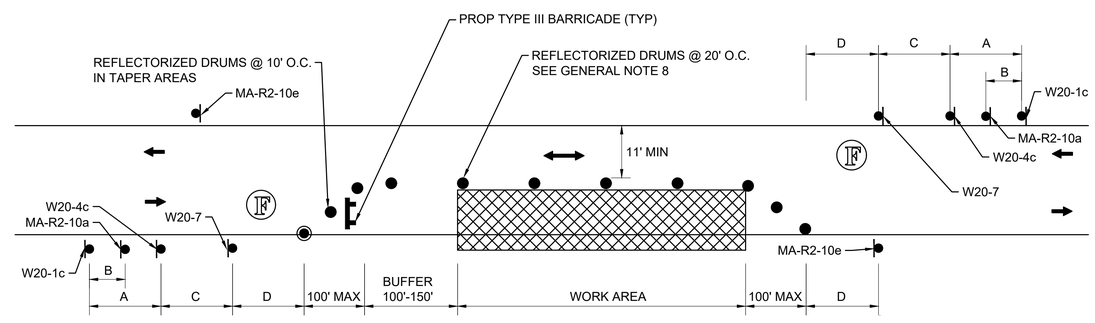

NOTES:
1. REFER TO ADVANCE SIGN SPACING TABLE ON TTCP GENERAL NOTES & LEGEND SHEET.

TYPICAL TWO-WAY STREET LANE CLOSURE ALTERNATING TRAFFIC

SCALE: NTS

604996 HD (TTCP).DWG Plotted on 3-Aug-2020 4:15 PM

WOBURN
NEW BOSTON STREET

STATE	FED. AID PROJ. NO.	SHEET NO.	TOTAL SHEETS
MA	TBD	50	147
PROJECT FILE NO.	604996		

TEMPORARY TRAFFIC CONTROL PLANS
ADVANCED SIGN SCHEMATIC

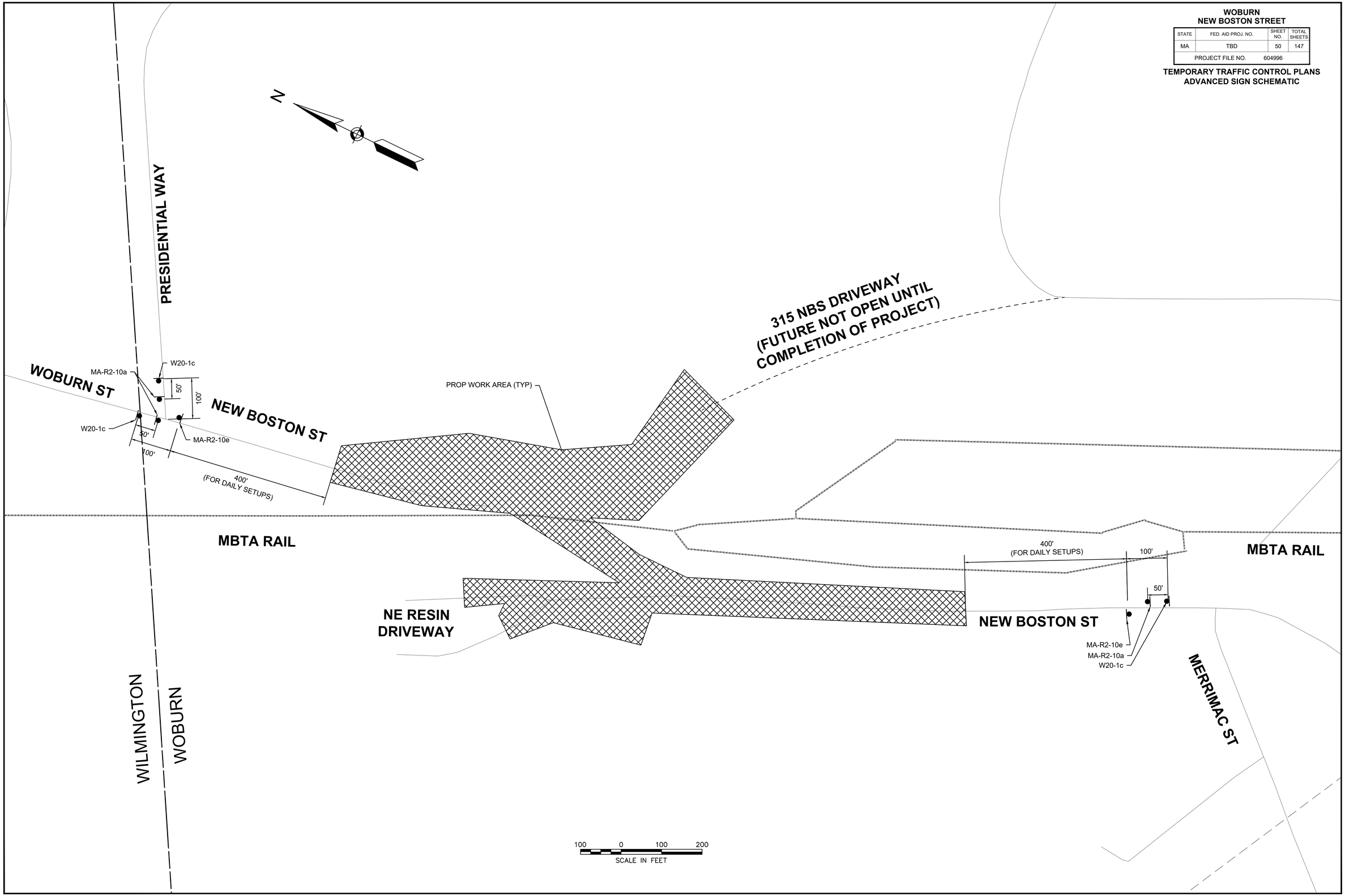

604996 HD (TTCP).DWG Plotted on 3-Aug-2020 3:25 PM

604996 HD (TTCP).DWG Plotted on 3-Aug-2020 4:26 PM

TEMPORARY TRAFFIC CONTROL SIGN SUMMARY

IDENTIFICATION NUMBER	SIZE OF SIGN		TEXT	TEXT DIMENSIONS (INCHES)			COLOR			NUMBER OF SIGNS REQUIRED (SEE NOTE 3)
	WIDTH	HEIGHT		LETTER HEIGHT	VERTICAL SPACING	ARROW RTE. MKR.	BACK-GROUND	LEGEND	BORDER	
MA-R2-10a	48"	36"	WORK ZONE / SPEEDING FINES DOUBLED	AS PER MASSDOT STANDARD			FLUOR-ESCENT ORANGE / WHITE	BLACK	BLACK	3
MA-R2-10e	36"	48"	END ROAD WORK / DOUBLE FINES END				FLUOR-ESCENT ORANGE / WHITE	BLACK	BLACK	2
R4-7b	24"	30"	KEEP RIGHT	SEE FHWA "STANDARD HIGHWAY SIGNS, 2004 EDITION"; AS AMENDED			WHITE	BLACK	BLACK	2
R11-2	48"	30"	ROAD CLOSED				WHITE	BLACK	BLACK	5
W5-3(MOD)	30"	30"	ONE LANE ROAD				FLUOR-ESCENT ORANGE	BLACK	BLACK	2
W8-1	36"	36"	BUMP				FLUOR-ESCENT ORANGE	BLACK	BLACK	2
W8-3	36"	36"	PAVEMENT ENDS				FLUOR-ESCENT ORANGE	BLACK	BLACK	2
W8-8	36"	36"	ROUGH ROAD				FLUOR-ESCENT ORANGE	BLACK	BLACK	2
W8-9	36"	36"	LOW SHOULDER				FLUOR-ESCENT ORANGE	BLACK	BLACK	2
W8-15	36"	36"	GROOVED PAVEMENT				FLUOR-ESCENT ORANGE	BLACK	BLACK	2
W20-1c	36"	36"	ROAD WORK AHEAD				FLUOR-ESCENT ORANGE	BLACK	BLACK	3
W20-4c	36"	36"	ONE LANE ROAD AHEAD				FLUOR-ESCENT ORANGE	BLACK	BLACK	2
W20-7	36"	36"					FLUOR-ESCENT ORANGE	BLACK	BLACK	2
W21-7	36"	36"	UTILITY WORK AHEAD				FLUOR-ESCENT ORANGE	BLACK	BLACK	2

NOTES:
1. HIGH INTENSITY REFLECTIVE SHEETING SHALL BE USED FOR ALL SIGNS. SEE FHWA "STANDARD HIGHWAY SIGNS, 2004 EDITION" FOR TEXT DIMENSIONS, AS AMENDED; THE 1977 MASSHIGHWAY DEPARTMENT CONSTRUCTION AND TRAFFIC STANDARD DETAILS, AS AMENDED, FOR SIGNS AND SUPPORTS; THE MASSHIGHWAY DEPARTMENT SIGN LISTINGS 1993 EDITION, AS AMENDED; THE 2009 MANUAL ON UNIFORM TRAFFIC CONTROL DEVICES FOR MOUNTING REQUIREMENTS; AND THE 2017 MassDOT STANDARD SIGNS BOOK, AS AMENDED.
2. ALL SIGNS SHOWN GRAPHICALLY FOR INFORMATION ONLY. SIGN VENDOR SHALL FABRICATE ALL SIGNS IN ACCORDANCE WITH THE APPLICABLE STANDARDS.
3. NUMBER OF SIGNS SHOWN ARE APPROXIMATE. ADDITIONAL SIGNS MAY BE REQUIRED AS DIRECTED BY THE ENGINEER.

604996 HD (STAGE_NOTES).DWG Plotted on 3-Aug-2020 3:26 PM

CONSTRUCTION STAGING GENERAL NOTES:

1. CONTRACTOR SHALL UTILIZE THE TEMPORARY TRAFFIC CONTROL TYPICAL DETAILS PROVIDED IN THE CONTRACT DOCUMENTS FOR DAILY WORK ZONE SETUPS OUTSIDE OF FINAL WORK AREAS AS POSSIBLE TO COMPLETE THE WORK WITHIN THE PUBLIC WAY
2. CONTRACTOR SHALL PROVIDE ALL TEMPORARY TRAFFIC CONTROL DEVICES INCLUDING BUT NOT LIMITED TO BARRIER, ATTENUATOR, DRUMS, CONES, SIGNS, PAVEMENT MARKINGS, AS NECESSARY FOR EACH STAGE OF CONSTRUCTION OR AS DIRECTED BY THE ENGINEER.
3. 11' MINIMUM LANE WIDTHS SHALL BE MAINTAINED UNLESS OTHERWISE NOTED.
4. CONTRACTOR SHALL MAINTAIN ROADWAY DRAINAGE FOR EACH STAGE OF CONSTRUCTION
5. CONTRACTOR SHALL MAINTAIN ABUTTER ACCESS AT ALL TIMES IN EACH STAGE OF CONSTRUCTION
6. CONTRACTOR SHALL MAINTAIN EMERGENCY VEHICLE ACCESS AT ALL TIMES IN EACH STAGE OF CONSTRUCTION
7. CONTRACTOR SHALL NOT PERMIT PUBLIC ACCESS TO NEWLY CONSTRUCTED SIDEWALKS UNTIL ALL PROJECT SIDEWALKS ARE FULLY CONSTRUCTED AND ADAAG COMPLIANT OR AS DIRECTED BY THE ENGINEER
8. CONTRACTOR SHALL SECURE WORK AREAS BY APPROPRIATE MEANS AT NO COST TO MASSDOT, TO PREVENT UNAUTHORIZED ACCESS AT ALL TIMES.

SUGGESTED CONSTRUCTION STAGING SEQUENCE:

STAGE 1

1. INSTALL STRUCTURAL LINER IN 30" MWRA SEWER LINE.
2. PERFORM SOIL IMPROVEMENT WORK IN AREA OF SOUTH ABUTMENT.
3. RELOCATE ALL OVERHEAD UTILITIES TO TEMPORARY OVERHEAD ALIGNMENT.
   - 3.1. IN AREAS OF FILL, CONTRACTOR TO PERFORM REQUIRED EARTH WORK PRIOR TO INSTALLATION OF TEMPORARY UTILITY POLES.
   - 3.2. INSTALL TEMPORARY SERVICE CONNECTIONS, AS REQUIRED.
4. INSTALL NEW HEADWALLS IN MBTA ROW, DRAINAGE UNDER TRACKS, NEW MBTA CULVERT.
5. INSTALL NEW HEADWALL& NEW DRAINAGE CULVERT ACROSS RESINS DRIVEWAY. PARTIALLY CONSTRUCT PROPOSED WALL FOR DRAINAGE CULVERT OUTLET.
6. CONSTRUCT NEW SEWER MANHOLE AND SERVICE CONNECTION.
7. INSTALL UNDERGROUND PTC CONDUIT.
8. INSTALL DRILLED SHAFTS AND CONSTRUCT BRIDGE PIERS.
9. PARTIALLY CONSTRUCT SOUTHERN ABUTMENT AND RETAINING WALLS.
10. INSTALL WORK AREA ENCLOSURE ALONG MBTA ROW

STAGE 2A

NORTH

1. CONSTRUCT TEMPORARY DRIVEWAY.

SOUTH

1. CONSTRUCT TEMPORARY NE RESINS DRIVEWAY.

STAGE 2B

SOUTH

1. COMPLETE CONSTRUCTION OF SOUTHERN ABUTMENT.
2. CONSTRUCT SOUTHERN ROADWAY APPROACH, WALLS, DRAINAGE, ELECTRIC UNDERGROUND DUCT BANK AND COMMUNITY UNDERGROUND DUCT BANK. FROM STA 108+25 TO STA 115+50.
3. CONSTRUCT PERMANENT NE RESINS DRIVEWAY.

NORTH

1. CONSTRUCT NORTHERN ABUTMENT.
2. CONSTRUCT NORTHERN ROADWAY APPROACH, DRAINAGE, ELECTRIC UNDERGROUND DUCT BANK AND COMMUNITY UNDERGROUND DUCT BANK FROM 102+50 TO 106+50.
3. CONSTRUCT 315 NBS DRIVE.
4. INSTALL GAS LINE (BO).

STAGE 3A

NORTH

1. CONTINUE TO CONSTRUCT NORTHERN ROADWAY APPROACH, DRAINAGE, ELECTRIC UNDERGROUND DUCT BANK AND COMMUNITY UNDERGROUND DUCT BANK FROM 103+50 TO 106+50.
2. CONTINUE TO CONSTRUCT 315 NBS DRIVE.

SOUTH

1. REMOVE NE RESINS TEMP DRIVEWAY

BRIDGE

1. INSTALL DRILLED SHAFTS AND CONSTRUCT BRIDGE PIERS. COORDINATE WITH AT&T.

STAGE 3B

SOUTH

1. FINISHING WORK TO BE PERFORMED ON SOUTHERN APPROACH.

NORTH

1. CONTINUE TO CONSTRUCT NORTHERN ROADWAY APPROACH, DRAINAGE, ELECTRIC UNDERGROUND DUCT BANK AND COMMUNITY UNDERGROUND DUCT BANK FROM 103+50 TO 106+50.
2. CONTINUE TO CONSTRUCT 315 NBS DRIVE.

BRIDGE

1. CONSTRUCT BRIDGE SUPERSTRUCTURE
2. INSTALL ELECTRIC UNDERGROUND DUCT BANK, COMMUNICATION DUCT BANK AND WATER LINE OVER BRIDGE.

STAGE 4

SOUTH

1. COMPLETE CONSTRUCTION OF SOUTHERN ROADWAY.

NORTH

1. COMPLETE CONSTRUCTION OF NORTHERN ROADWAY AND DRIVEWAYS.

LEGEND	
●	REFLECTORIZED DRUM
	TEMPORARY CONSTRUCTION SIGN
	TYPE III BARRICADE
	TEMPORARY BARRIER / WORK ZONE ENCLOSURE
	WORK AREA (PUBLIC ACCESS RESTRICTED)
	EXIST PAVEMENT
	TEMP DRIVEWAY OR END-STATE ROADWAY
←	TRAFFIC FLOW

WOBURN
NEW BOSTON STREET

STATE	FED. AID PROJ. NO.	SHEET NO.	TOTAL SHEETS
MA	TBD	53	147
PROJECT FILE NO.	604996		

CONSTRUCTION STAGING
STAGE 1

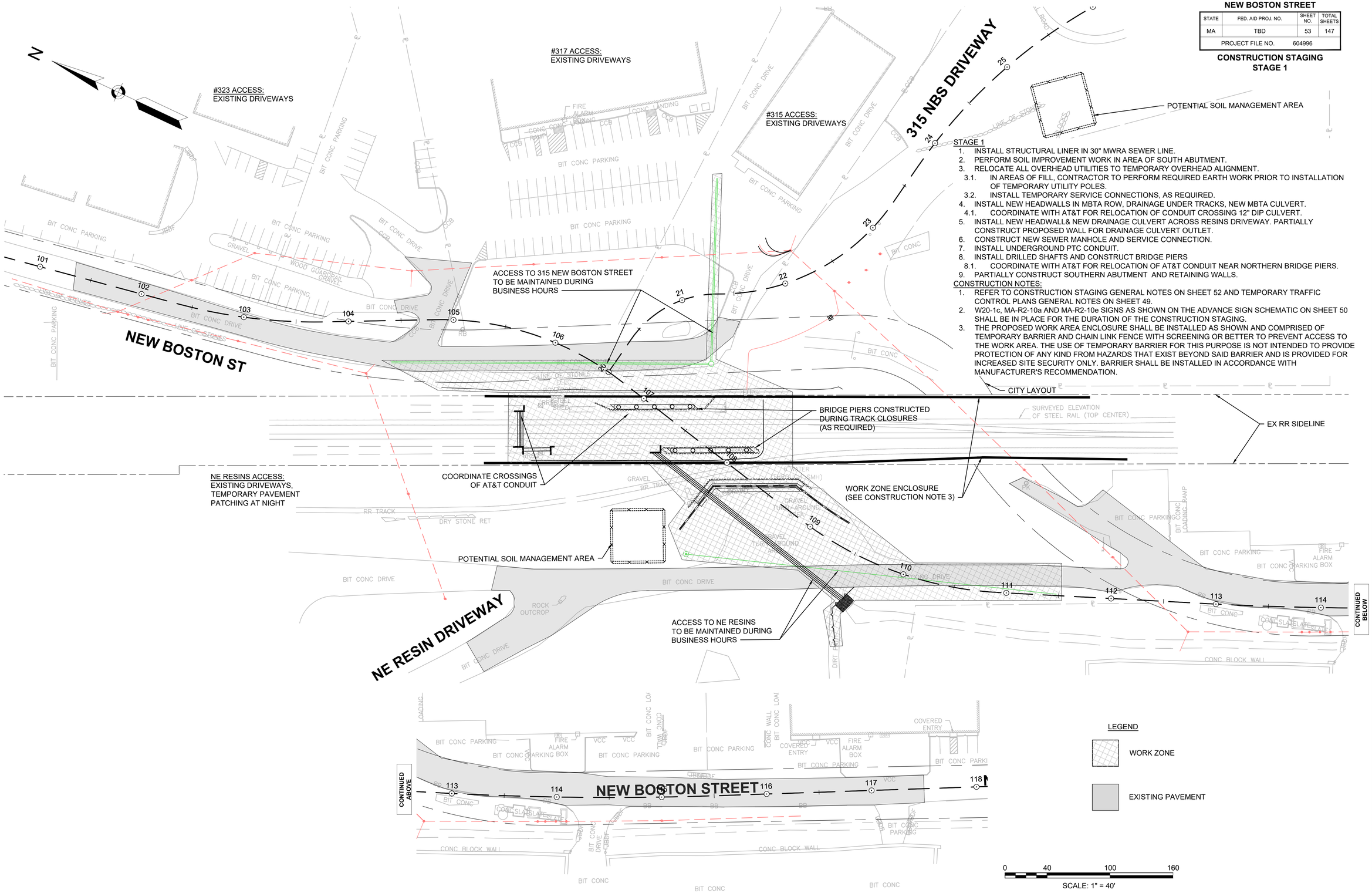

STAGE 1

1. INSTALL STRUCTURAL LINER IN 30" MWRA SEWER LINE.
2. PERFORM SOIL IMPROVEMENT WORK IN AREA OF SOUTH ABUTMENT.
3. RELOCATE ALL OVERHEAD UTILITIES TO TEMPORARY OVERHEAD ALIGNMENT.
   3.1. IN AREAS OF FILL, CONTRACTOR TO PERFORM REQUIRED EARTH WORK PRIOR TO INSTALLATION OF TEMPORARY UTILITY POLES.
   3.2. INSTALL TEMPORARY SERVICE CONNECTIONS, AS REQUIRED.
4. INSTALL NEW HEADWALLS IN MBTA ROW, DRAINAGE UNDER TRACKS, NEW MBTA CULVERT.
   4.1. COORDINATE WITH AT&T FOR RELOCATION OF CONDUIT CROSSING 12" DIP CULVERT.
5. INSTALL NEW HEADWALL& NEW DRAINAGE CULVERT ACROSS RESINS DRIVEWAY. PARTIALLY CONSTRUCT PROPOSED WALL FOR DRAINAGE CULVERT OUTLET.
6. CONSTRUCT NEW SEWER MANHOLE AND SERVICE CONNECTION.
7. INSTALL UNDERGROUND PTC CONDUIT.
8. INSTALL DRILLED SHAFTS AND CONSTRUCT BRIDGE PIERS
   8.1. COORDINATE WITH AT&T FOR RELOCATION OF AT&T CONDUIT NEAR NORTHERN BRIDGE PIERS.
9. PARTIALLY CONSTRUCT SOUTHERN ABUTMENT AND RETAINING WALLS.

CONSTRUCTION NOTES:

1. REFER TO CONSTRUCTION STAGING GENERAL NOTES ON SHEET 52 AND TEMPORARY TRAFFIC CONTROL PLANS GENERAL NOTES ON SHEET 49.
2. W20-1c, MA-R2-10a AND MA-R2-10e SIGNS AS SHOWN ON THE ADVANCE SIGN SCHEMATIC ON SHEET 50 SHALL BE IN PLACE FOR THE DURATION OF THE CONSTRUCTION STAGING.
3. THE PROPOSED WORK AREA ENCLOSURE SHALL BE INSTALLED AS SHOWN AND COMPRISED OF TEMPORARY BARRIER AND CHAIN LINK FENCE WITH SCREENING OR BETTER TO PREVENT ACCESS TO THE WORK AREA. THE USE OF TEMPORARY BARRIER FOR THIS PURPOSE IS NOT INTENDED TO PROVIDE PROTECTION OF ANY KIND FROM HAZARDS THAT EXIST BEYOND SAID BARRIER AND IS PROVIDED FOR INCREASED SITE SECURITY ONLY. BARRIER SHALL BE INSTALLED IN ACCORDANCE WITH MANUFACTURER'S RECOMMENDATION.

LEGEND

WORK ZONE

EXISTING PAVEMENT

604996 HD (STAGE1).DWG Plotted on 3-Aug-2020 9:39 PM

WOBURN
NEW BOSTON STREET

STATE	FED. AID PROJ. NO.	SHEET NO.	TOTAL SHEETS
MA	TBD	54	147
PROJECT FILE NO.	604996		

CONSTRUCTION STAGING
STAGE 2A

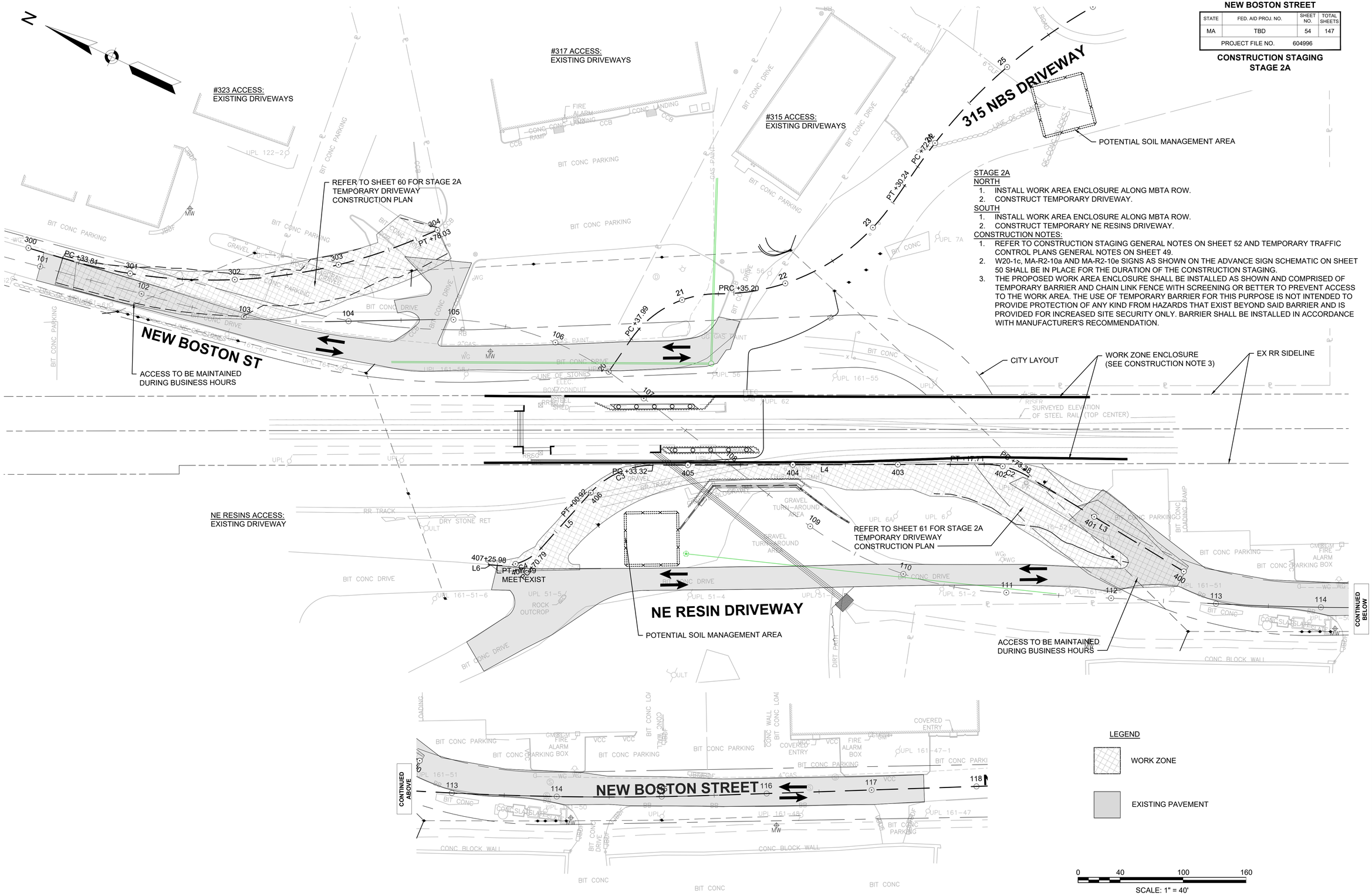

STAGE 2A

NORTH

1. INSTALL WORK AREA ENCLOSURE ALONG MBTA ROW.
2. CONSTRUCT TEMPORARY DRIVEWAY.

SOUTH

1. INSTALL WORK AREA ENCLOSURE ALONG MBTA ROW.
2. CONSTRUCT TEMPORARY NE RESINS DRIVEWAY.

CONSTRUCTION NOTES:

1. REFER TO CONSTRUCTION STAGING GENERAL NOTES ON SHEET 52 AND TEMPORARY TRAFFIC CONTROL PLANS GENERAL NOTES ON SHEET 49.
2. W20-1c, MA-R2-10a AND MA-R2-10e SIGNS AS SHOWN ON THE ADVANCE SIGN SCHEMATIC ON SHEET 50 SHALL BE IN PLACE FOR THE DURATION OF THE CONSTRUCTION STAGING.
3. THE PROPOSED WORK AREA ENCLOSURE SHALL BE INSTALLED AS SHOWN AND COMPRISED OF TEMPORARY BARRIER AND CHAIN LINK FENCE WITH SCREENING OR BETTER TO PREVENT ACCESS TO THE WORK AREA. THE USE OF TEMPORARY BARRIER FOR THIS PURPOSE IS NOT INTENDED TO PROVIDE PROTECTION OF ANY KIND FROM HAZARDS THAT EXIST BEYOND SAID BARRIER AND IS PROVIDED FOR INCREASED SITE SECURITY ONLY. BARRIER SHALL BE INSTALLED IN ACCORDANCE WITH MANUFACTURER'S RECOMMENDATION.

604996 HD (STAGE2A).DWG Plotted on 3-Aug-2020 3:29 PM

WOBURN
NEW BOSTON STREET

STATE	FED. AID PROJ. NO.	SHEET NO.	TOTAL SHEETS
MA	TBD	55	147
PROJECT FILE NO.	604996		

CONSTRUCTION STAGING
STAGE 2B

STAGE 2B
SOUTH
1. COMPLETE CONSTRUCTION OF SOUTHERN ABUTMENT.
2. CONSTRUCT SOUTHERN ROADWAY APPROACH, WALLS, DRAINAGE, ELECTRIC UNDERGROUND DUCT BANK AND COMMUNITY UNDERGROUND DUCT BANK. FROM STA 108+25 TO STA 115+50.
3. CONSTRUCT PERMANENT NE RESINS DRIVEWAY.

NORTH
1. CONSTRUCT NORTHERN ABUTMENT.
2. CONSTRUCT NORTHERN ROADWAY APPROACH, DRAINAGE, ELECTRIC UNDERGROUND DUCT BANK AND COMMUNITY UNDERGROUND DUCT BANK FROM 102+50 TO 106+50. GAS MAIN TO BE INSTALLED (BO).
3. CONSTRUCT 315 NBS DRIVE.

CONSTRUCTION NOTES:
1. REFER TO CONSTRUCTION STAGING GENERAL NOTES ON SHEET 52 AND TEMPORARY TRAFFIC CONTROL PLANS GENERAL NOTES ON SHEET 49.
2. W20-1c, MA-R2-10a AND MA-R2-10e SIGNS AS SHOWN ON THE ADVANCE SIGN SCHEMATIC ON SHEET 50 SHALL BE IN PLACE FOR THE DURATION OF THE CONSTRUCTION STAGING.
3. THE PROPOSED WORK AREA ENCLOSURE SHALL BE INSTALLED AS SHOWN AND COMPRISED OF TEMPORARY BARRIER AND CHAIN LINK FENCE WITH SCREENING OR BETTER TO PREVENT ACCESS TO THE WORK AREA. THE USE OF TEMPORARY BARRIER FOR THIS PURPOSE IS NOT INTENDED TO PROVIDE PROTECTION OF ANY KIND FROM HAZARDS THAT EXIST BEYOND SAID BARRIER AND IS PROVIDED FOR INCREASED SITE SECURITY ONLY. BARRIER SHALL BE INSTALLED IN ACCORDANCE WITH MANUFACTURER'S RECOMMENDATION.

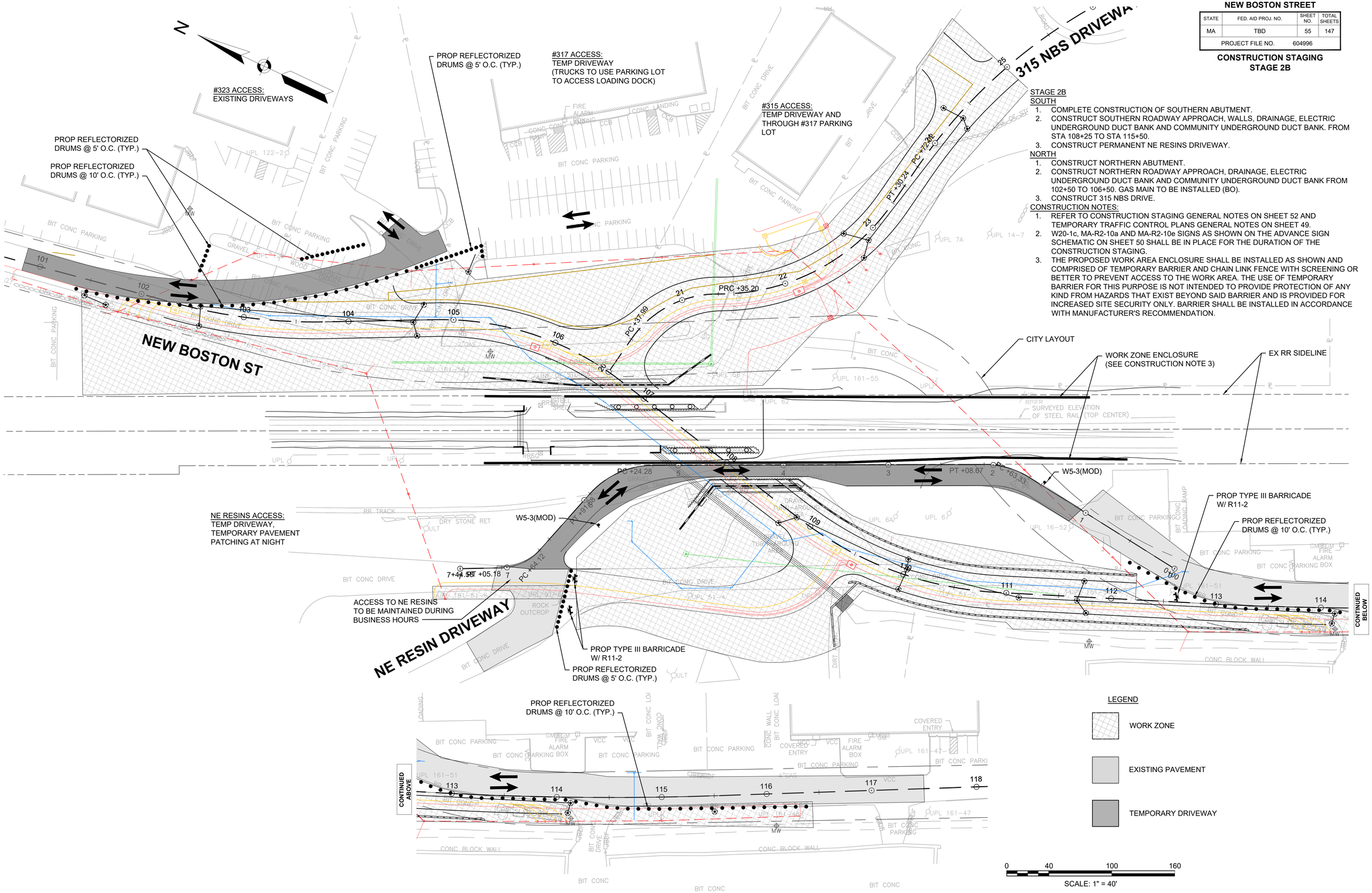

604996 HD (STAGE2B).DWG Plotted on 3-Aug-2020 3:30 PM

WOBURN
NEW BOSTON STREET

STATE	FED. AID PROJ. NO.	SHEET NO.	TOTAL SHEETS
MA	TBD	56	147
PROJECT FILE NO.	604996		

CONSTRUCTION STAGING
STAGE 3A

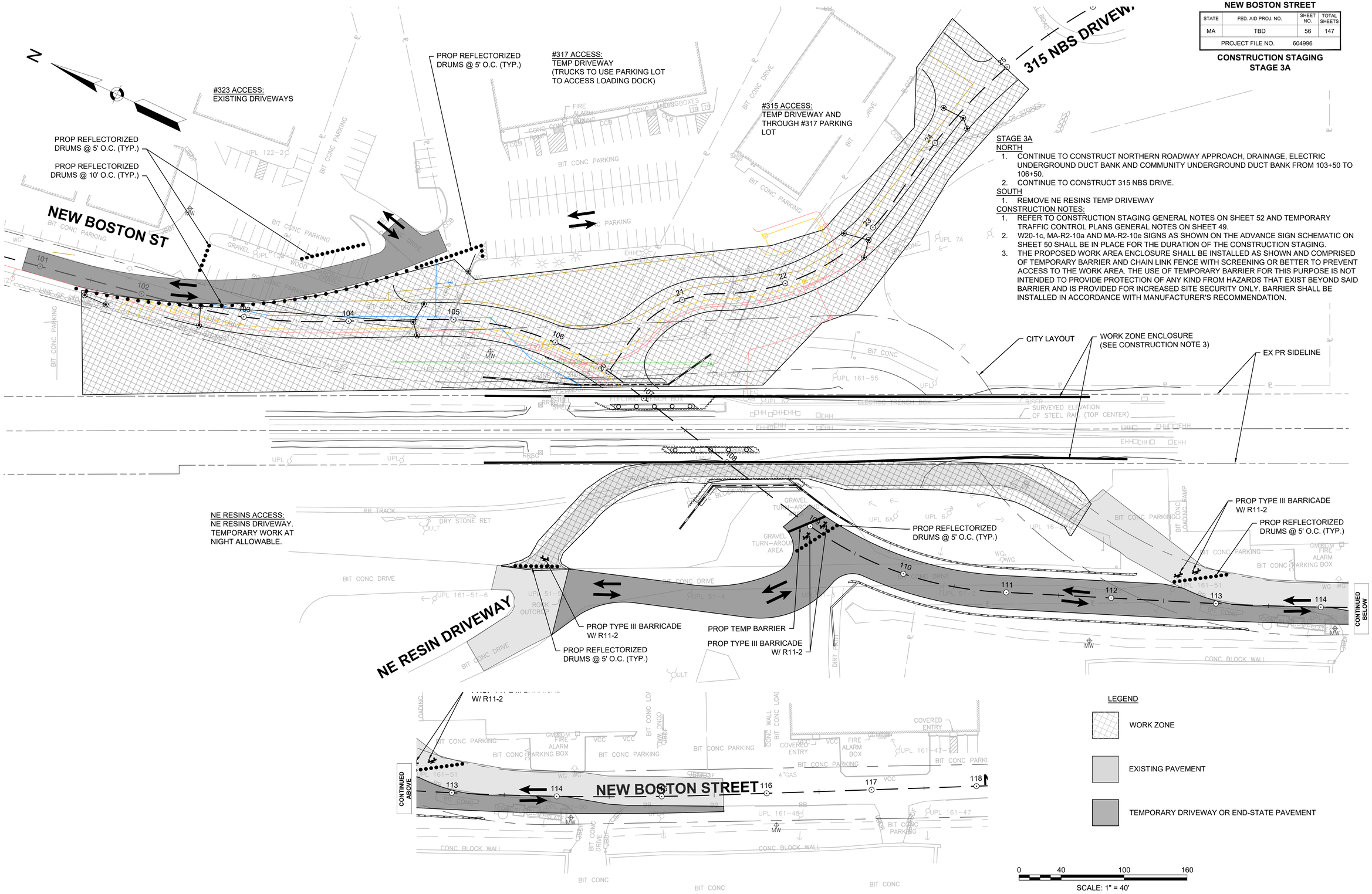

STAGE 3A

NORTH

1. CONTINUE TO CONSTRUCT NORTHERN ROADWAY APPROACH, DRAINAGE, ELECTRIC UNDERGROUND DUCT BANK AND COMMUNITY UNDERGROUND DUCT BANK FROM 103+50 TO 106+50.
2. CONTINUE TO CONSTRUCT 315 NBS DRIVE.

SOUTH

1. REMOVE NE RESINS TEMP DRIVEWAY

CONSTRUCTION NOTES:

1. REFER TO CONSTRUCTION STAGING GENERAL NOTES ON SHEET 52 AND TEMPORARY TRAFFIC CONTROL PLANS GENERAL NOTES ON SHEET 49.
2. W20-1c, MA-R2-10a AND MA-R2-10e SIGNS AS SHOWN ON THE ADVANCE SIGN SCHEMATIC ON SHEET 50 SHALL BE IN PLACE FOR THE DURATION OF THE CONSTRUCTION STAGING.
3. THE PROPOSED WORK AREA ENCLOSURE SHALL BE INSTALLED AS SHOWN AND COMPRISED OF TEMPORARY BARRIER AND CHAIN LINK FENCE WITH SCREENING OR BETTER TO PREVENT ACCESS TO THE WORK AREA. THE USE OF TEMPORARY BARRIER FOR THIS PURPOSE IS NOT INTENDED TO PROVIDE PROTECTION OF ANY KIND FROM HAZARDS THAT EXIST BEYOND SAID BARRIER AND IS PROVIDED FOR INCREASED SITE SECURITY ONLY. BARRIER SHALL BE INSTALLED IN ACCORDANCE WITH MANUFACTURER'S RECOMMENDATION.

604996 HD (STAGE3A).DWG Plotted on 3-Aug-2020 3:31 PM

WOBURN
NEW BOSTON STREET

STATE	FED. AID PROJ. NO.	SHEET NO.	TOTAL SHEETS
MA	TBD	57	147
PROJECT FILE NO.	604996		

CONSTRUCTION STAGING
STAGE 3B

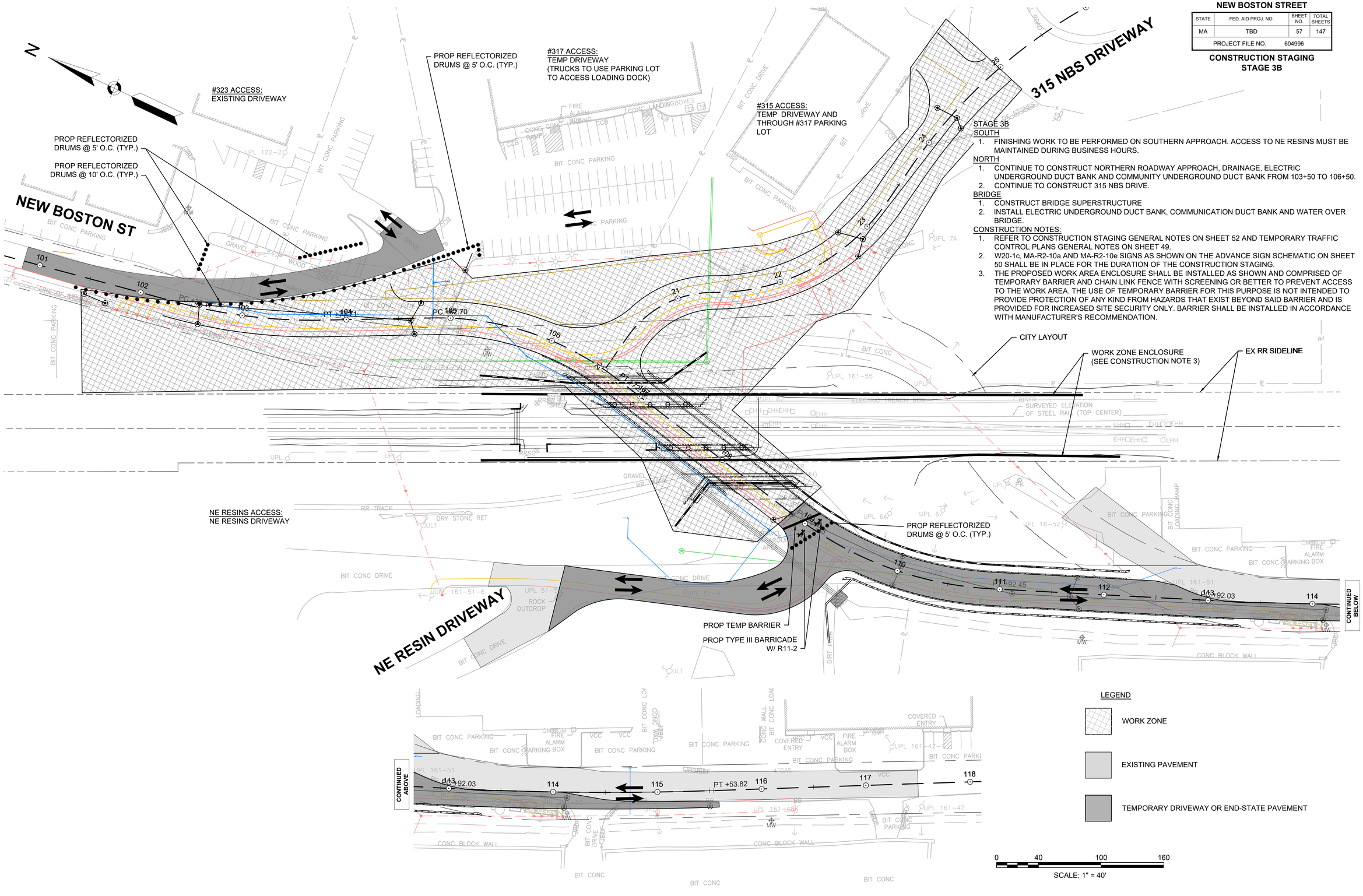

STAGE 3B

SOUTH

1. FINISHING WORK TO BE PERFORMED ON SOUTHERN APPROACH. ACCESS TO NE RESINS MUST BE MAINTAINED DURING BUSINESS HOURS.

NORTH

1. CONTINUE TO CONSTRUCT NORTHERN ROADWAY APPROACH, DRAINAGE, ELECTRIC UNDERGROUND DUCT BANK AND COMMUNITY UNDERGROUND DUCT BANK FROM 103+50 TO 106+50.
2. CONTINUE TO CONSTRUCT 315 NBS DRIVE.

BRIDGE

1. CONSTRUCT BRIDGE SUPERSTRUCTURE
2. INSTALL ELECTRIC UNDERGROUND DUCT BANK, COMMUNICATION DUCT BANK AND WATER OVER BRIDGE.

CONSTRUCTION NOTES:

1. REFER TO CONSTRUCTION STAGING GENERAL NOTES ON SHEET 52 AND TEMPORARY TRAFFIC CONTROL PLANS GENERAL NOTES ON SHEET 49.
2. W20-1c, MA-R2-10a AND MA-R2-10e SIGNS AS SHOWN ON THE ADVANCE SIGN SCHEMATIC ON SHEET 50 SHALL BE IN PLACE FOR THE DURATION OF THE CONSTRUCTION STAGING.
3. THE PROPOSED WORK AREA ENCLOSURE SHALL BE INSTALLED AS SHOWN AND COMPRISED OF TEMPORARY BARRIER AND CHAIN LINK FENCE WITH SCREENING OR BETTER TO PREVENT ACCESS TO THE WORK AREA. THE USE OF TEMPORARY BARRIER FOR THIS PURPOSE IS NOT INTENDED TO PROVIDE PROTECTION OF ANY KIND FROM HAZARDS THAT EXIST BEYOND SAID BARRIER AND IS PROVIDED FOR INCREASED SITE SECURITY ONLY. BARRIER SHALL BE INSTALLED IN ACCORDANCE WITH MANUFACTURER'S RECOMMENDATION.

604996 HD (STAGE3B).DWG Plotted on 3-Aug-2020 4:24 PM

WOBURN
NEW BOSTON STREET

STATE	FED. AID PROJ. NO.	SHEET NO.	TOTAL SHEETS
MA	TBD	58	147
PROJECT FILE NO.	604996		

CONSTRUCTION STAGING
STAGE 4

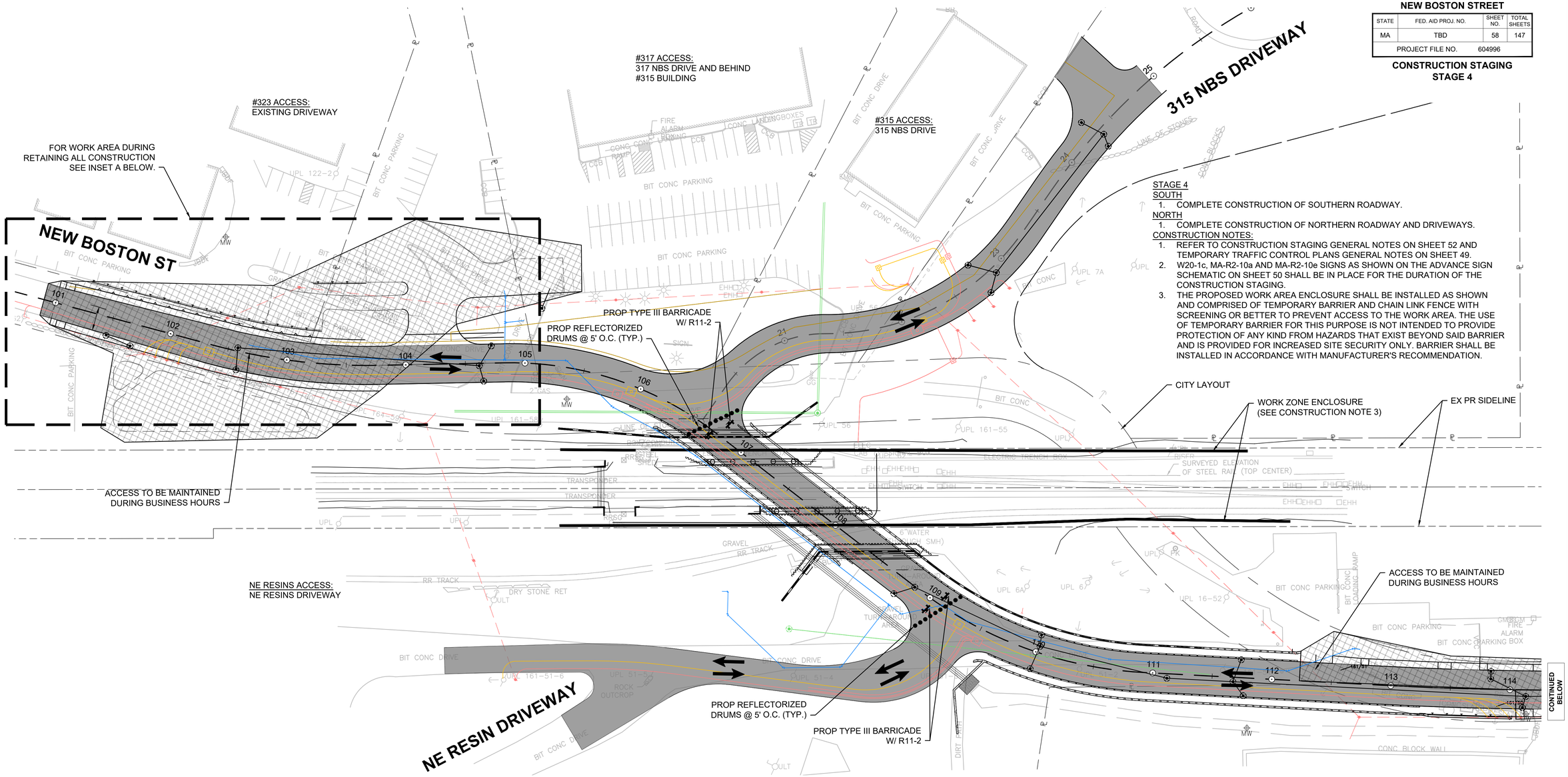

STAGE 4
SOUTH
1. COMPLETE CONSTRUCTION OF SOUTHERN ROADWAY.
NORTH
1. COMPLETE CONSTRUCTION OF NORTHERN ROADWAY AND DRIVEWAYS.

CONSTRUCTION NOTES:
1. REFER TO CONSTRUCTION STAGING GENERAL NOTES ON SHEET 52 AND TEMPORARY TRAFFIC CONTROL PLANS GENERAL NOTES ON SHEET 49.
2. W20-1c, MA-R2-10a AND MA-R2-10e SIGNS AS SHOWN ON THE ADVANCE SIGN SCHEMATIC ON SHEET 50 SHALL BE IN PLACE FOR THE DURATION OF THE CONSTRUCTION STAGING.
3. THE PROPOSED WORK AREA ENCLOSURE SHALL BE INSTALLED AS SHOWN AND COMPRISED OF TEMPORARY BARRIER AND CHAIN LINK FENCE WITH SCREENING OR BETTER TO PREVENT ACCESS TO THE WORK AREA. THE USE OF TEMPORARY BARRIER FOR THIS PURPOSE IS NOT INTENDED TO PROVIDE PROTECTION OF ANY KIND FROM HAZARDS THAT EXIST BEYOND SAID BARRIER AND IS PROVIDED FOR INCREASED SITE SECURITY ONLY. BARRIER SHALL BE INSTALLED IN ACCORDANCE WITH MANUFACTURER'S RECOMMENDATION.

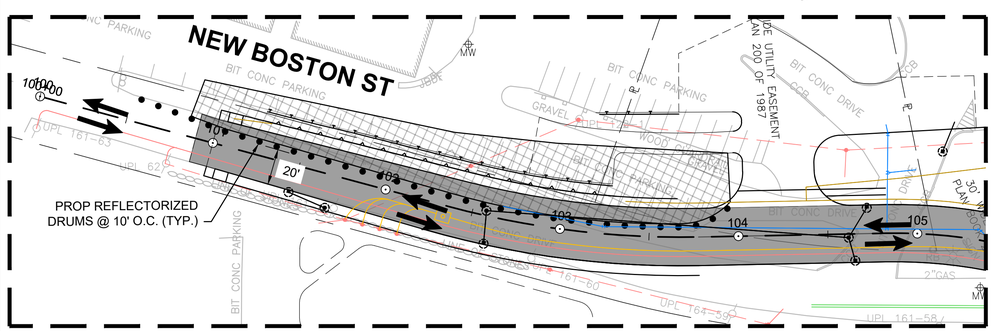

INSET A - RETAINING WALL WORK AREA

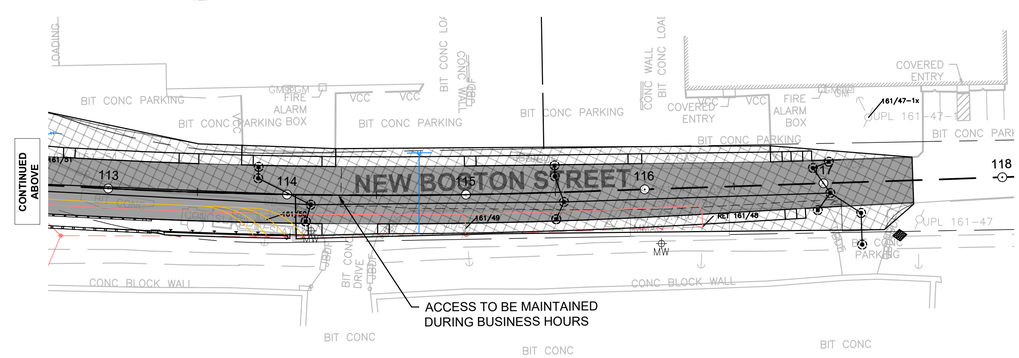

LEGEND
- WORK ZONE
- END-STATE PAVEMENT

0 40 100 160
SCALE: 1" = 40'

604996 HD (STAGE4).DWG Plotted on 3-Aug-2020 3:34 PM

WOBURN
NEW BOSTON STREET

STATE	FED. AID PROJ. NO.	SHEET NO.	TOTAL SHEETS
MA	TBD	59	147
PROJECT FILE NO.	604996		

CONSTRUCTION STAGING
STAGE 2A - TYPICAL SECTIONS

PAVEMENT NOTES

SEE SHEET 13

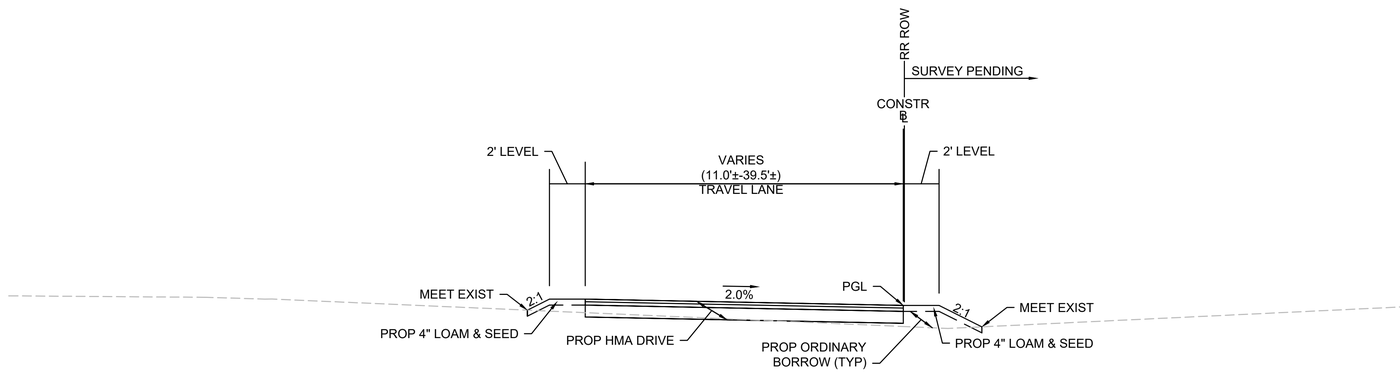

STAGE 2A - TEMP DRIVEWAY SOUTH (IN FILL)

STA 400+00± TO STA 401+00±
402+50± TO STA 407+17±
NTS

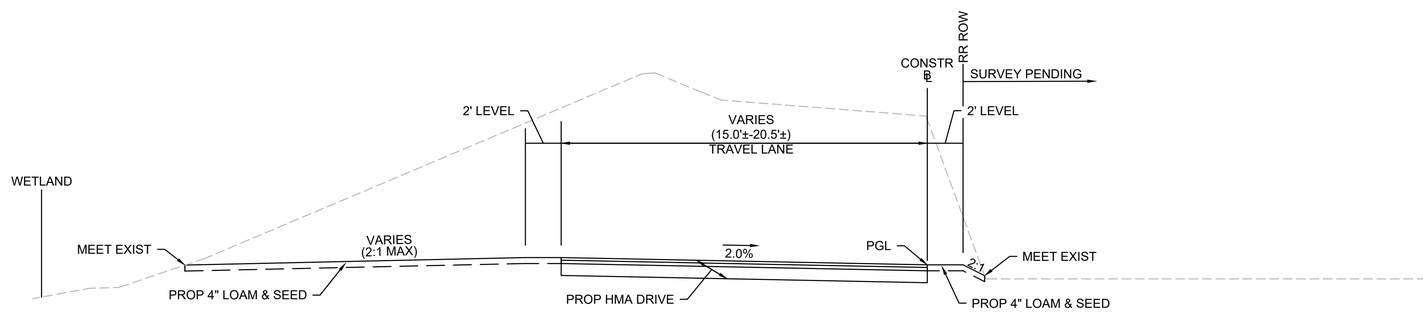

STAGE 2A - TEMP DRIVEWAY SOUTH (IN CUT)

STA 401+00± TO STA 402+50±
NTS

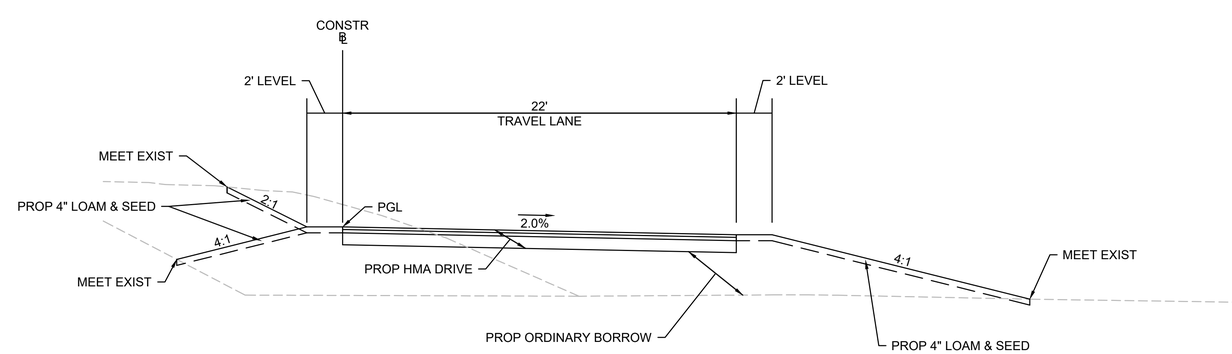

STAGE 2A - TEMP DRIVEWAY NORTH

STA 300+34± TO STA 304+00±
NTS

604996_HD(TYP_STAGE 2A).DWG Plotted on 3-Aug-2020 3:35 PM

WOBURN
NEW BOSTON STREET

STATE	FED. AID PROJ. NO.	SHEET NO.	TOTAL SHEETS
MA	TBD	60	147
PROJECT FILE NO.	604996		

CONSTRUCTION STAGING
STAGE 2A - CONSTRUCTION PLANS

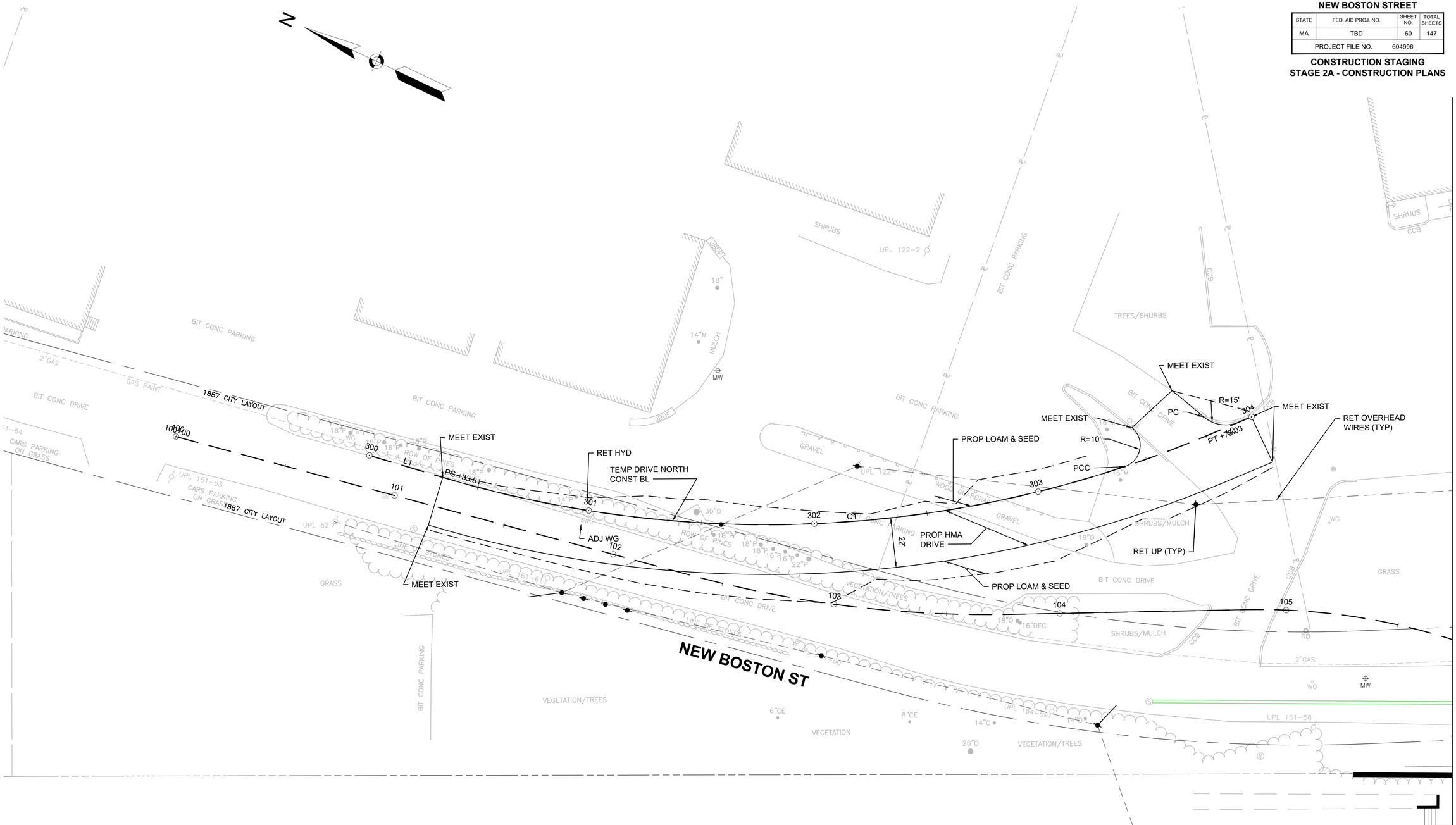

0 20 50 100
SCALE: 1" = 20'

TEMP DRIVE NORTH CONSTRUCTION BASELINE DATA

NUMBER	STARTING STATION	NORTHING	EASTING	CURVE DATA	LINE DATA	ENDING STATION	NORTHING	EASTING
L1	300+00.00	3015922.9101	751108.9689		S8°33'57"E 33.81'	300+33.81	3015889.4789	751114.0045
C1	300+33.81	3015889.4789	751114.0045	R=500.00' Δ=39°26'41" L=344.22' T=179.25'		303+78.03	3015592.3176	751273.9304
L2	303+78.03	3015592.3176	751273.9304		S48°00'38"E 21.97'	304+00.00	3015577.6189	751290.2610

604996 HD (STAGE2A).DWG Plotted on 3-Aug-2020 3:36 PM

WOBURN
NEW BOSTON STREET

STATE	FED. AID PROJ. NO.	SHEET NO.	TOTAL SHEETS
MA	TBD	61	147
PROJECT FILE NO.	604996		

CONSTRUCTION STAGING
STAGE 2A - CONSTRUCTION PLANS

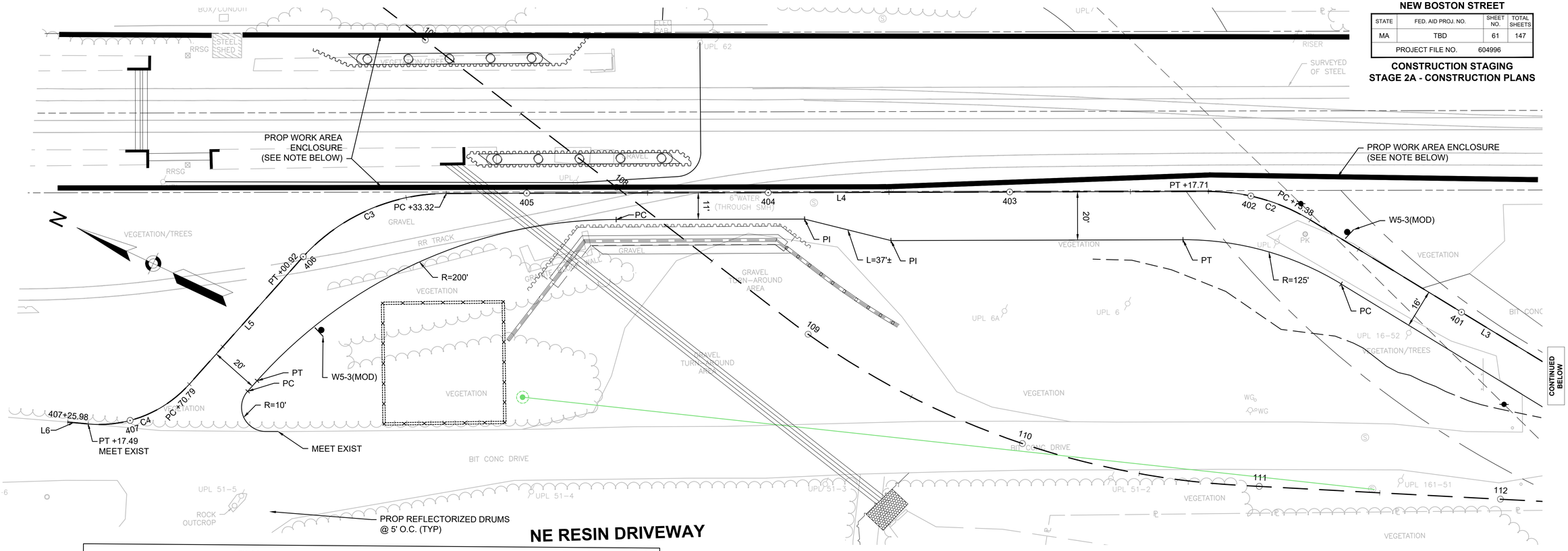

NE RESIN DRIVEWAY

TEMP DRIVE SOUTH CONSTRUCTION BASELINE DATA								
NUMBER	STARTING STATION	NORTHING	EASTING	CURVE DATA	LINE DATA	ENDING STATION	NORTHING	EASTING
L3	400+00.00	3014795.8390	751298.6046		N6°12'34"E 173.38'	401+73.38	3014968.1997	751317.3580
C2	401+73.38	3014968.1997	751317.3580	R=80.50' Δ=31°33'21" L=44.34' T=22.75'		402+17.71	3015011.3680	751310.0811
L4	402+17.71	3015011.3680	751310.0811		N25°20'47"W 315.61'	405+33.32	3015296.5930	751174.9741
C3	405+33.32	3015296.5930	751174.9741	R=80.50' Δ=48°06'53" L=67.60' T=35.94'		406+00.92	3015339.3013	751125.1391
L5	406+00.92	3015339.3013	751125.1391		N73°27'39"W 69.87'	406+70.79	3015359.1922	751058.1563
C4	406+70.79	3015359.1922	751058.1563	R=50.00' Δ=53°30'51" L=46.70' T=25.21'		407+17.49	3015390.0663	751025.3892
L6	407+17.49	3015390.0663	751025.3892		N19°56'48"W 8.49'	407+25.98	3015398.0447	751022.4937

NOTE:
THE PROPOSED WORK AREA ENCLOSURE SHALL BE INSTALLED AS SHOWN AND COMPRISED OF TEMPORARY BARRIER AND CHAIN LINK FENCE WITH SCREENING OR BETTER TO PREVENT ACCESS TO THE WORK AREA. THE USE OF TEMPORARY BARRIER FOR THIS PURPOSE IS NOT INTENDED TO PROVIDE PROTECTION OF ANY KIND FROM HAZARDS THAT EXIST BEYOND SAID BARRIER AND IS PROVIDED FOR INCREASED SITE SECURITY ONLY. BARRIER SHALL BE INSTALLED IN ACCORDANCE WITH MANUFACTURER'S RECOMMENDATION.

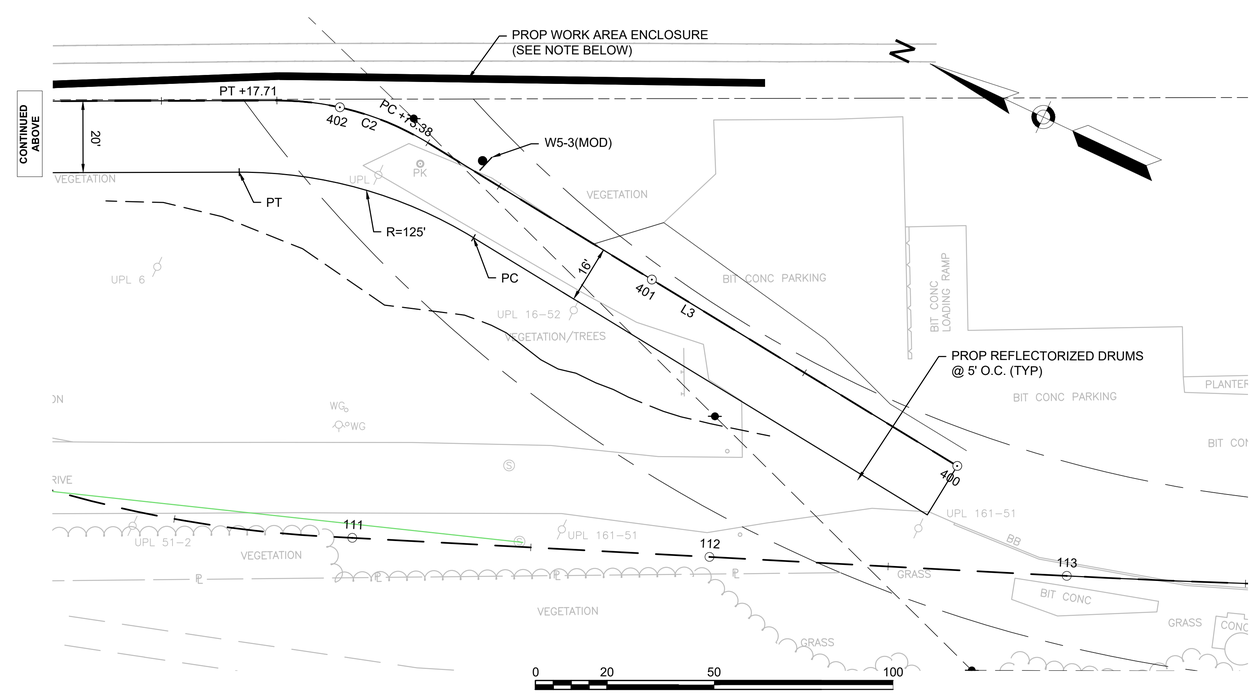

604996 HD (STAGE2A).DWG Plotted on 3-Aug-2020 3:36 PM

WOBURN
NEW BOSTON STREET

STATE	FED. AID PROJ. NO.	SHEET NO.	TOTAL SHEETS
MA	TBD	62	147
PROJECT FILE NO.	604996		

CONSTRUCTION STAGING
STAGE 2A - PROFILES

TEMP DRIVEWAY - NORTH

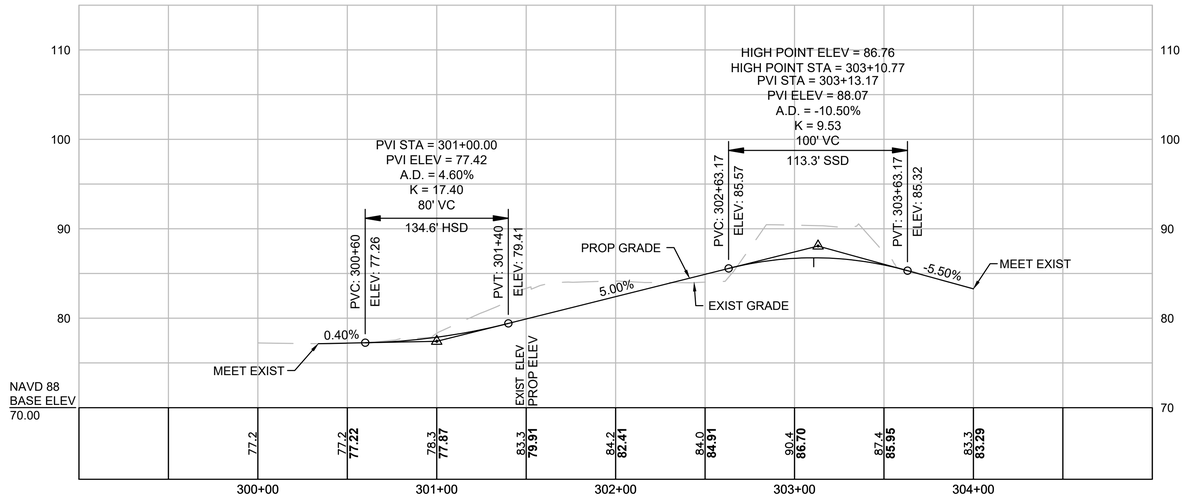

TEMP DRIVEWAY - SOUTH

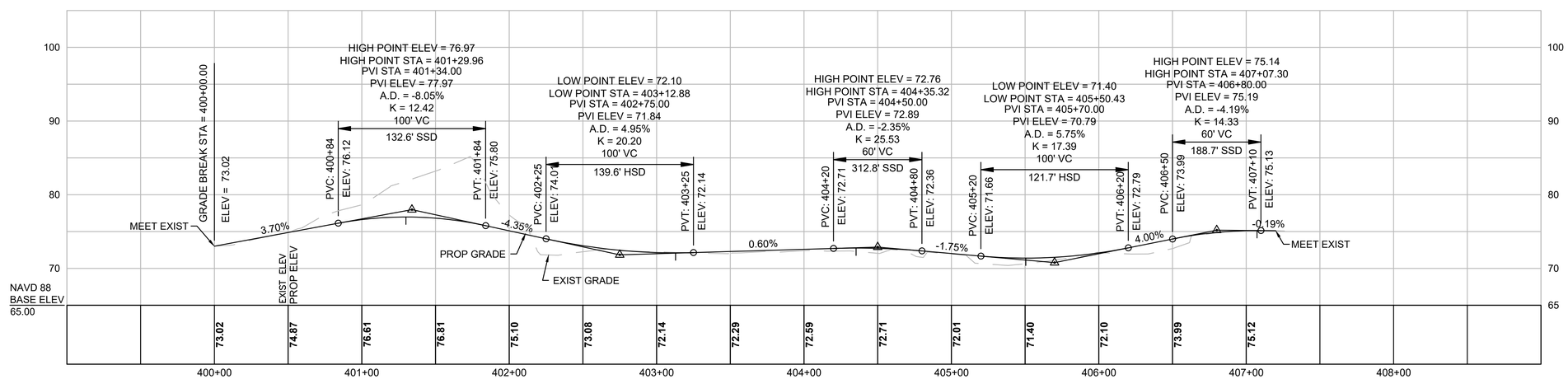

HOR. SCALE IN FEET
40 0 40 80
8 0 8 16
VER. SCALE IN FEET

FOR CONSTRUCTION PLANS: SEE SHEET NO. 60 - 61

604996_HD(PROF_STAGE 2A).DWG Plotted on 3-Aug-2020 3:37 PM

WOBURN
NEW BOSTON STREET

STATE	FED. AID PROJ. NO.	SHEET NO.	TOTAL SHEETS
MASS.	TBD	63	147
PROJECT FILE NO. 604996			

CONSTRUCTION STAGING
CROSS SECTIONS - TEMP DRIVEWAY NORTH

301+50

MATERIAL	AREA (SF)
CUT	56.1
FILL	10.4

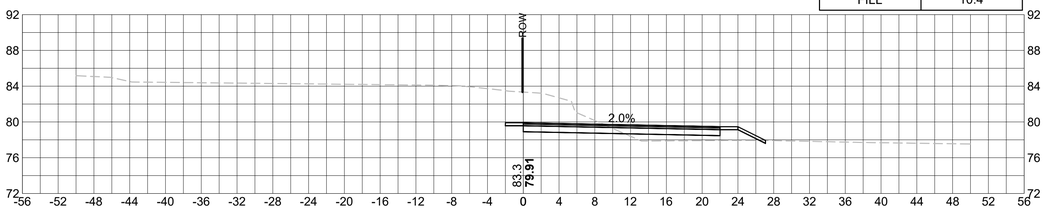

303+00

MATERIAL	AREA (SF)
CUT	101.3
FILL	5.8

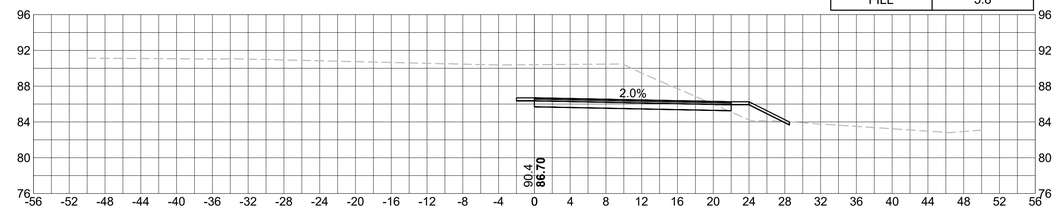

301+00

MATERIAL	AREA (SF)
CUT	24.2
FILL	--

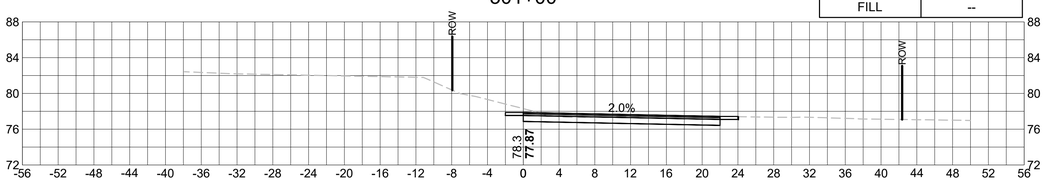

302+50

MATERIAL	AREA (SF)
CUT	6.5
FILL	1.7

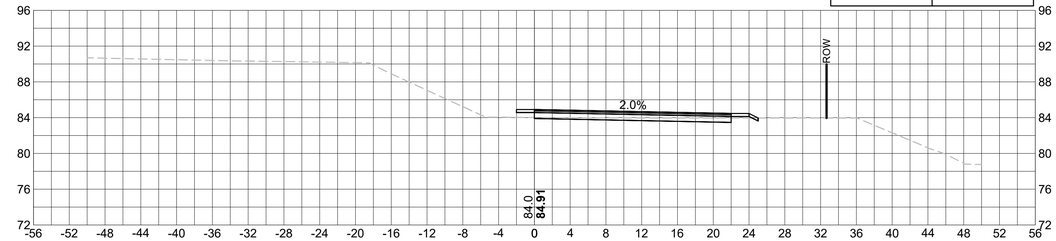

300+50

MATERIAL	AREA (SF)
CUT	23.7
FILL	--

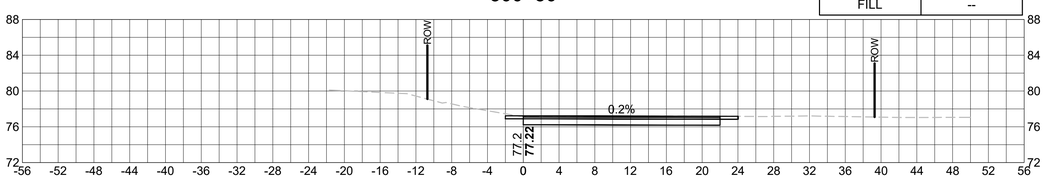

302+00

MATERIAL	AREA (SF)
CUT	63.7
FILL	5.4

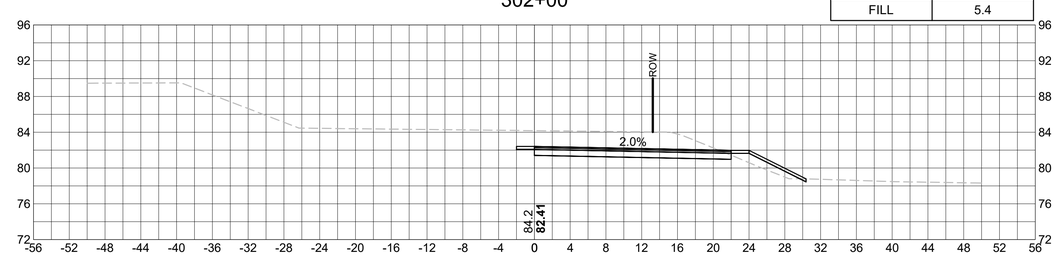

HOR. SCALE IN FEET
8 0 8 16
8 0 8 16
VER. SCALE IN FEET

604996_HD(XSEC_STAGE 2A).DWG Plotted on 3-Aug-2020 3:39 PM

WOBURN
NEW BOSTON STREET

STATE	FED. AID PROJ. NO.	SHEET NO.	TOTAL SHEETS
MASS.	TBD	64	147
PROJECT FILE NO. 604996			

CONSTRUCTION STAGING
CROSS SECTIONS - TEMP DRIVEWAY NORTH

304+00

MATERIAL	AREA (SF)
CUT	23.6
FILL	--

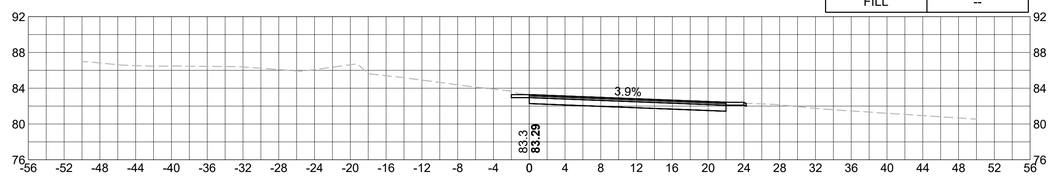

303+50

MATERIAL	AREA (SF)
CUT	60.3
FILL	2.8

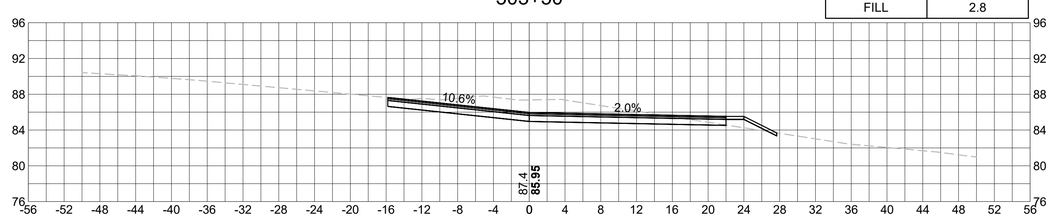

HOR. SCALE IN FEET
8 0 8 16
8 0 8 16
VER. SCALE IN FEET

604996_HD(XSEC_STAGE 2A).DWG Plotted on 3-Aug-2020 3:39 PM

WOBURN
NEW BOSTON STREET

STATE	FED. AID PROJ. NO.	SHEET NO.	TOTAL SHEETS
MASS.	TBD	65	147
PROJECT FILE NO. 604996			

CONSTRUCTION STAGING
CROSS SECTIONS - TEMP DRIVEWAY SOUTH

MATERIAL	AREA (SF)
CUT	116.8
FILL	--

401+00

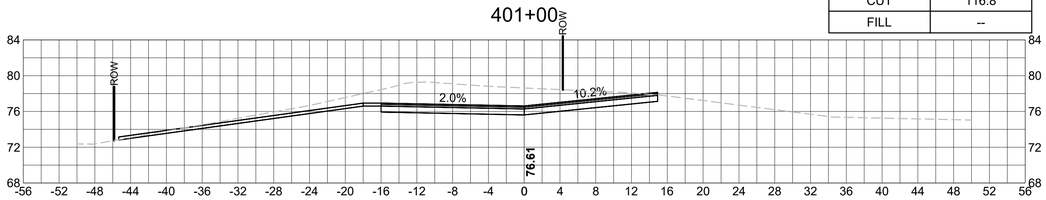

MATERIAL	AREA (SF)
CUT	0.6
FILL	13.7

402+50

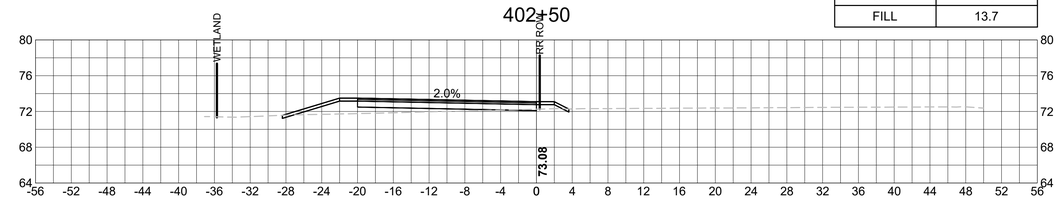

MATERIAL	AREA (SF)
CUT	32.5
FILL	--

400+50

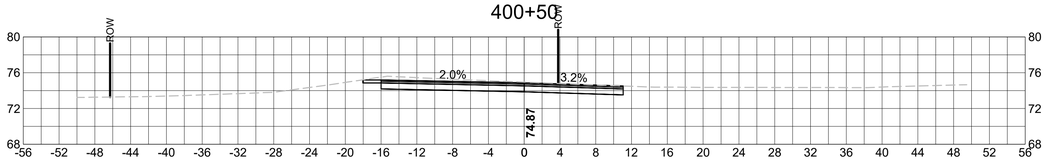

MATERIAL	AREA (SF)
CUT	222.0
FILL	--

402+00

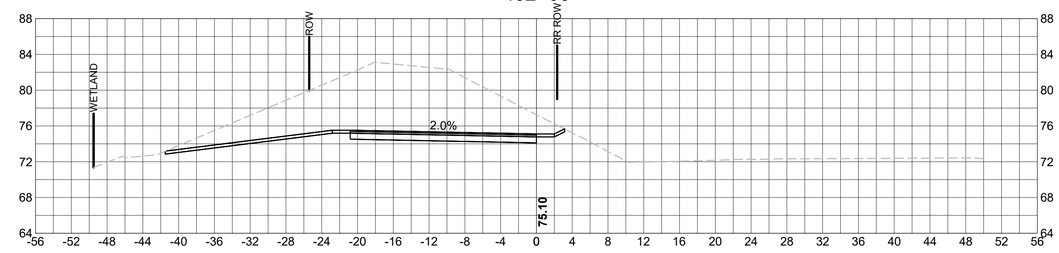

MATERIAL	AREA (SF)
CUT	17.9
FILL	0.1

400+00

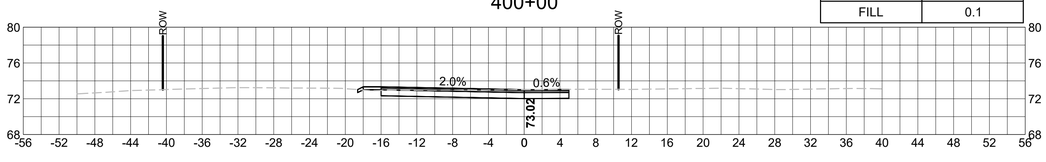

MATERIAL	AREA (SF)
CUT	265.2
FILL	--

401+50

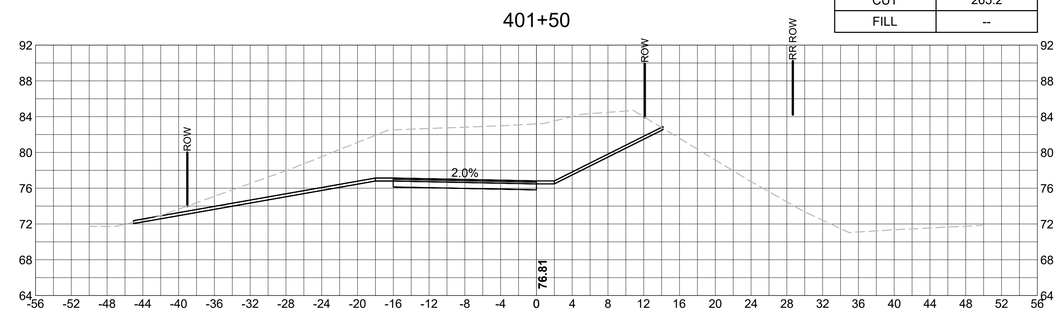

HOR. SCALE IN FEET
8 0 8 16
8 0 8 16
VER. SCALE IN FEET

604996_HD(XSEC_STAGE 2A).DWG Plotted on 3-Aug-2020 3:39 PM

WOBURN
NEW BOSTON STREET

STATE	FED. AID PROJ. NO.	SHEET NO.	TOTAL SHEETS
MASS.	TBD	66	147
PROJECT FILE NO. 604996			

CONSTRUCTION STAGING
CROSS SECTIONS - TEMP DRIVEWAY SOUTH

MATERIAL	AREA (SF)
CUT	5.6
FILL	0.9

404+50

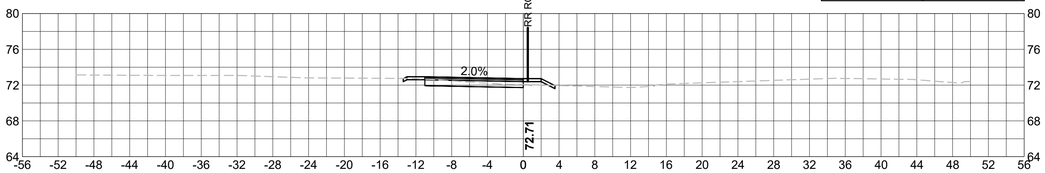

MATERIAL	AREA (SF)
CUT	14.2
FILL	8.4

406+50

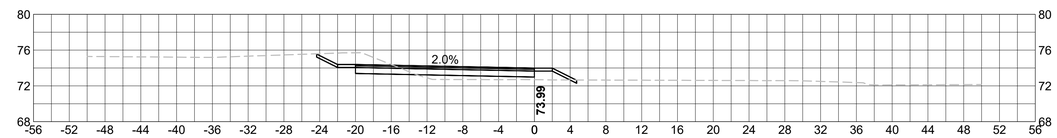

MATERIAL	AREA (SF)
CUT	8.7
FILL	--

404+00

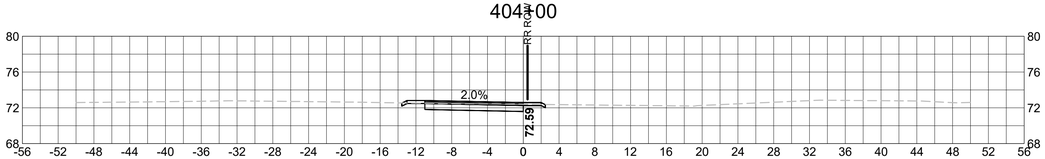

MATERIAL	AREA (SF)
CUT	15.6
FILL	--

406+00

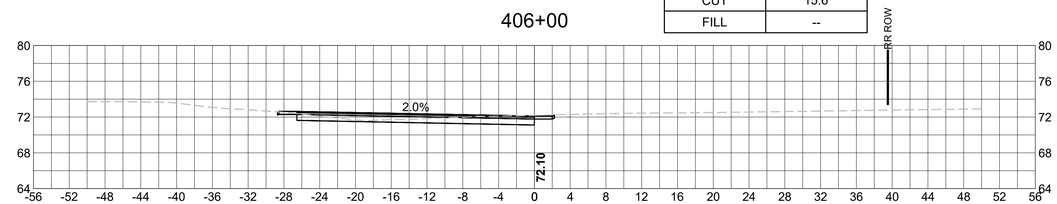

MATERIAL	AREA (SF)
CUT	10.0
FILL	1.0

403+50

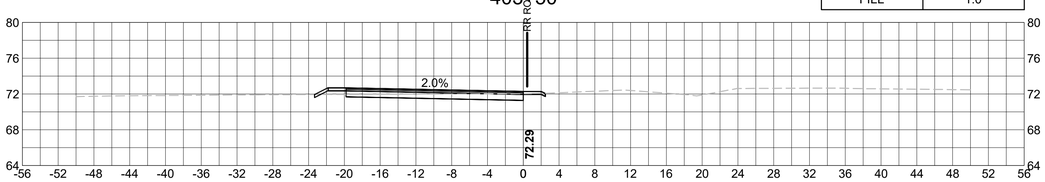

MATERIAL	AREA (SF)
CUT	19.4
FILL	1.3

405+50

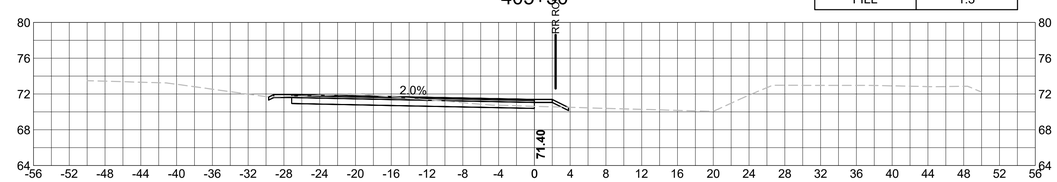

MATERIAL	AREA (SF)
CUT	14.4
FILL	1.1

403+00

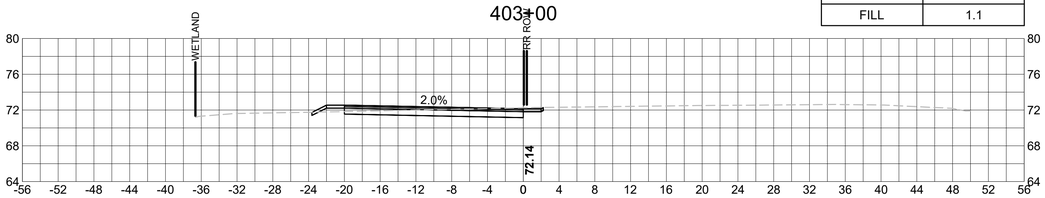

MATERIAL	AREA (SF)
CUT	13.4
FILL	0.2

405+00

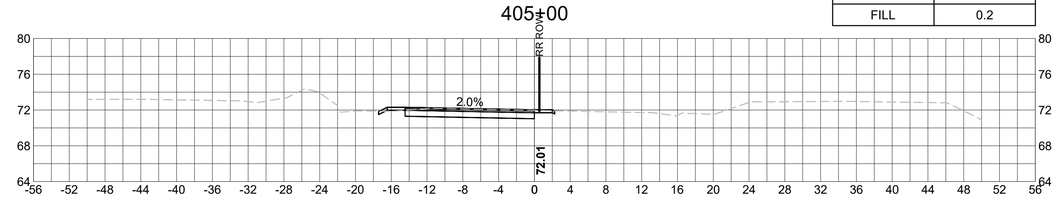

HOR. SCALE IN FEET
8 0 8 16
8 0 8 16
VER. SCALE IN FEET

604996_HD(XSEC_STAGE 2A).DWG Plotted on 3-Aug-2020 3:39 PM

604996_HD(DET).DWG Plotted on 3-Aug-2020 3:40 PM

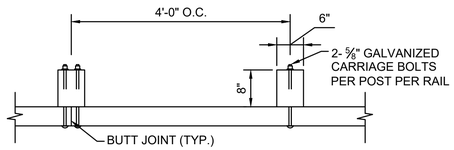

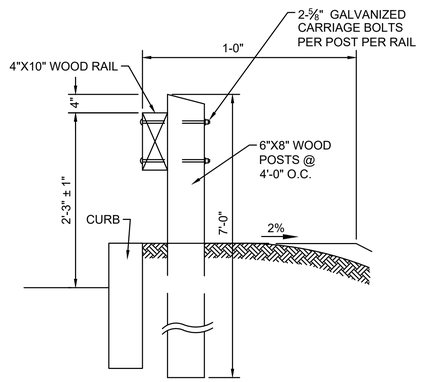

TIMBER GUARDRAIL

SCALE: N.T.S.

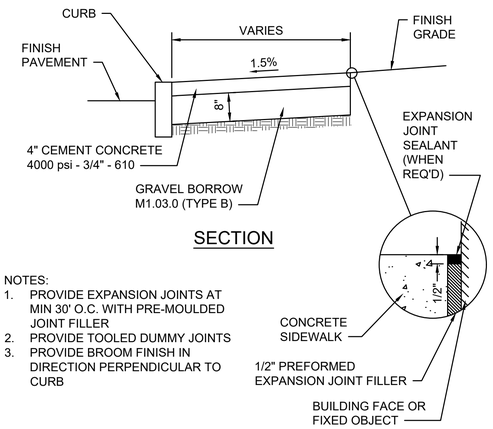

NOTES:
1. PROVIDE EXPANSION JOINTS AT MIN 30' O.C. WITH PRE-MOULDED JOINT FILLER
2. PROVIDE TOOLED DUMMY JOINTS
3. PROVIDE BROOM FINISH IN DIRECTION PERPENDICULAR TO CURB

CEMENT CONCRETE SIDEWALK

SCALE: N.T.S. DWG: WALK-01 DATE: MARCH 2013

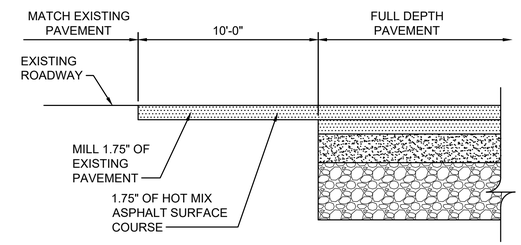

LONGITUDINAL SECTION

FULL DEPTH PAVEMENT TRANSITION

SCALE: N.T.S.

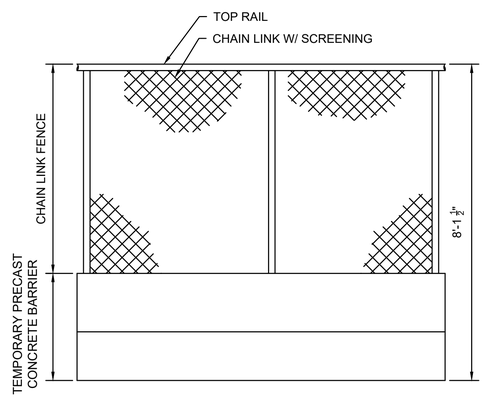

WORK AREA ENCLOSURE

SCALE: NTS

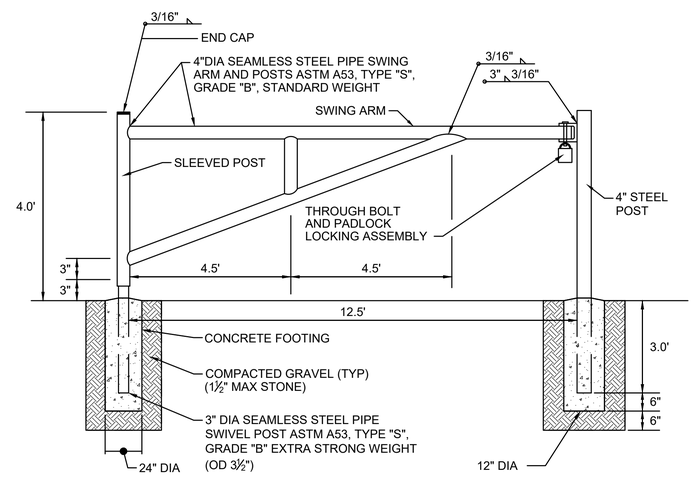

NOTES:
1. SHOP PRIME PAINT EXPOSED SURFACES FIELD PAINT EPOXY ENAMEL-YELLOW.
2. PROVIDE "MASTER" PADLOCK WITH 6 WORKING KEYS.
3. 4,000 PSI, 1.5", 565, CONCRETE FOOTING.

METAL PIPE RAIL GATE

SCALE: NTS

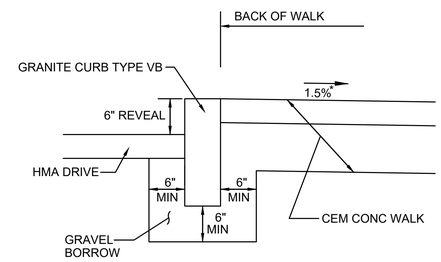

GRAN CURB AT THE BACK OF CEM CONC WALK

SCALE: NTS

604996_HD(DET).DWG Plotted on 3-Aug-2020 3:40 PM

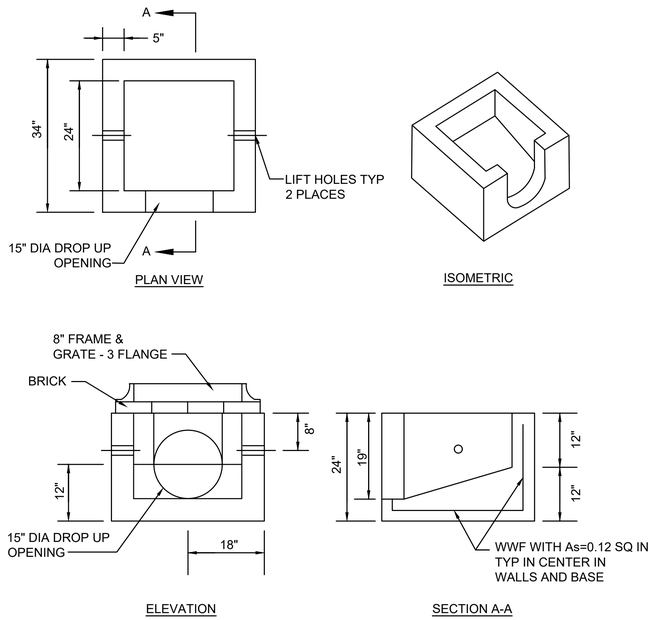

NOTES:
1. DESIGNED FOR AASHTO HS25-44 LOADING.
2. CONCRETE STRENGTH f'c=4000 PSI
3. REINFORCING STEEL: ASTM A185 (wwf) fy=60,000 PSI

SPECIAL GUTTER INLET

SCALE: N.T.S.

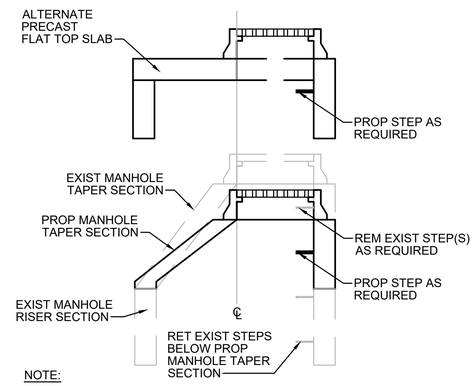

NOTE:
BASED ON ACTUAL FIELD CONDITIONS; THE CONTRACTOR SHALL DETERMINE WHICH STYLE OF TOP SECTION SHOULD BE USED.

DRAINAGE MANHOLE REBUILD

SCALE: NTS

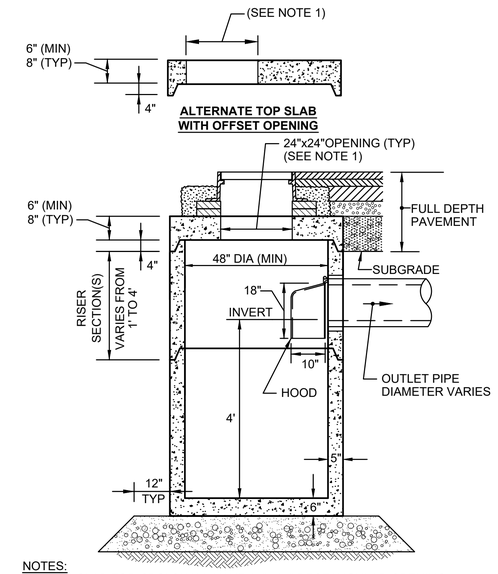

NOTES:
1. TOP SLAB FOR CBCI SHALL HAVE 24"x 27" RECTANGULAR OPENING.
2. 6" MINIMUM SPACE FROM TOP OF KNOCKOUT TO BOTTOM OF ROOF SLAB JOINT REQUIRED WHEN USING HOODS.
3. ALL SECTIONS SHALL BE RATED FOR HS-20 LOADING.

DEEP SUMP CATCH BASIN WITH HOOD

SCALE: NTS

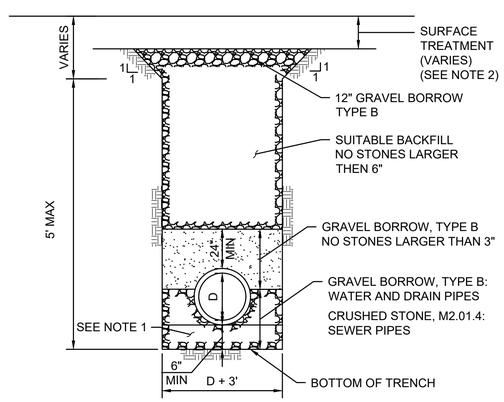

NOTES:
1. SOFT OR UNSUITABLE MATERIAL EXISTING BELOW THE REQUIRED BEDDING GRADE SHALL BE REMOVED AS DIRECTED AND REPLACED WITH SAND, GRAVEL, CRUSHED STONE OR OTHER SUITABLE MATERIAL AND THOROUGHLY COMPACTED.
2. IN FULL DEPTH PAVEMENT, CONTINUE SUITABLE BACKFILL. IF OPEN TO VEHICLE TRAFFIC , USE HMA PAVEMENT DEPTHS IN 2" LIFTS (4" MIN)

TRENCH DETAIL

SCALE: NTS

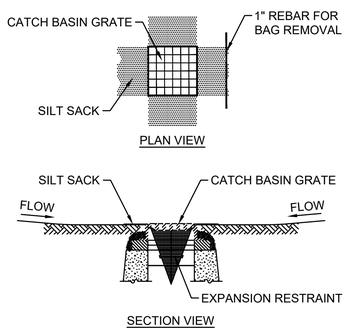

NOTES:

1. INSTALL SILT SACK IN EXISTING CATCH BASINS, BEFORE COMMENCING WORK, AND IN NEW CATCH BASINS, GUTTER INLETS, AND ALL CURB INLETS IMMEDIATELY AFTER INSTALLATION OF STRUCTURE. MAINTAIN UNTIL TOP COURSE PAVING IS COMPLETE OR A PERMANENT STAND OF GRASS HAS BEEN ESTABLISHED.
2. GRATE TO BE PLACED OVER SILT SACK.
3. SILT SACK SHALL BE INSPECTED PERIODICALLY AND AFTER ALL STORM EVENTS AND CLEANING OR REPLACEMENT SHALL BE PERFORMED PROMPTLY AS NEEDED.

SILT SACK IN CATCH BASIN

SCALE: NTS

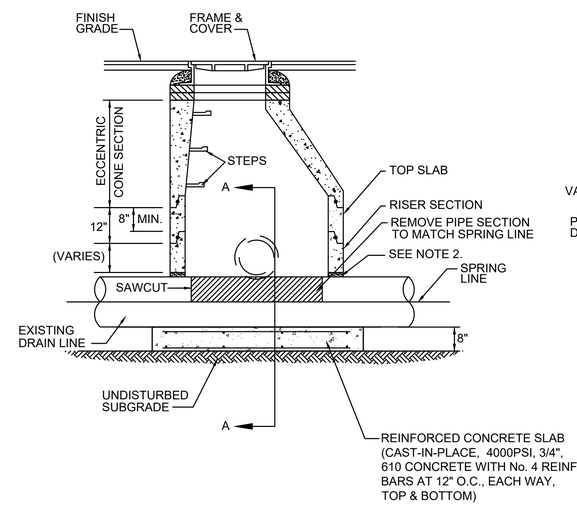

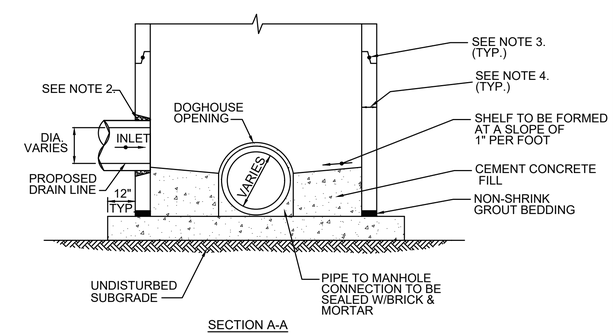

NOTES:

1. STRUCTURE SHALL BE DESIGNED FOR HS-20 LOADING.
2. PROVIDE OPENINGS FOR PIPES WITH 2" MAX. CLEARANCE TO OUTSIDE OF PIPE. MORTAR ALL PIPE CONNECTIONS (NON-SHRINK GROUT).
3. JOINT SEALANT BETWEEN PRECAST SECTIONS SHALL BE PREFORMED BUTYL RUBBER.
4. FOR MANHOLES OVER 9' IN DEPTH, WALL THICKNESS SHALL BE 6" MIN. FOR MANHOLES 9' OR LESS IN DEPTH, WALL THICKNESS SHALL BE 5" MIN.

DRAIN MANHOLE OVER EXISTING PIPE

SCALE: N.T.S.

604996_HD(DET).DWG Plotted on 3-Aug-2020 3:40 PM

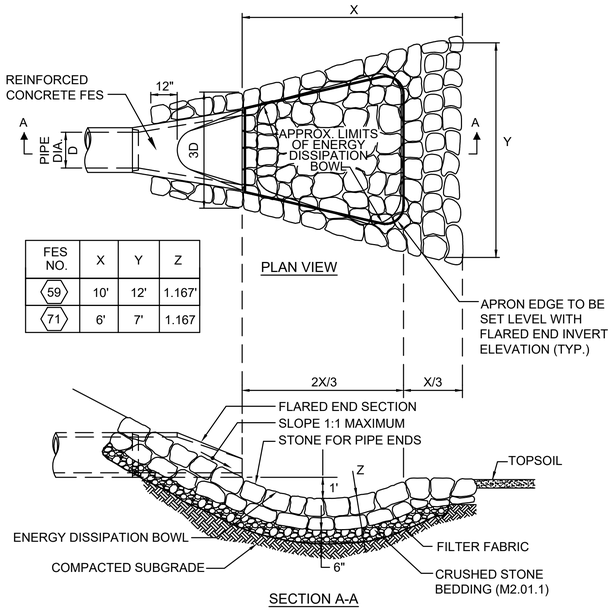

FES NO.	X	Y	Z
59	10'	12'	1.167'
71	6'	7'	1.167

STONE FOR PIPE ENDS ENERGY DISSIPATION APRON DETAIL AT FLARED END SECTIONS

SCALE: NTS

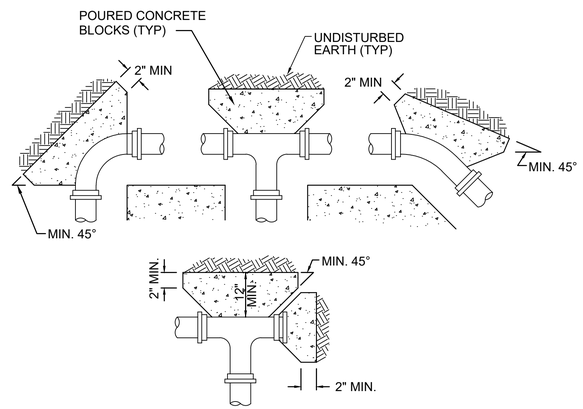

NOTES:

1. SPECIFIC THRUST BLOCK DESIGN SHALL CONFORM TO AWWA GUIDELINES.
2. PLACE 4 mil. POLYETHYLENE BETWEEN CONCRETE AND FITTING (CONCRETE SHALL NOT INTERFERE WITH JOINT).
3. MINIMUM CONCRETE THICKNESS SHALL BE 12 INCHES.
4. THRUST BLOCK ORIENTATION SHALL BE SUCH THAT THE CENTER OF THE FITTING CORRESPONDS WITH THE CENTER OF THE THRUST BLOCK.
5. THE MINIMUM ALLOWABLE ANGLE (EITHER VERTICAL OR HORIZONTAL) SHALL BE 45 DEGREES.

THRUST BLOCK DETAIL

SCALE: N.T.S.

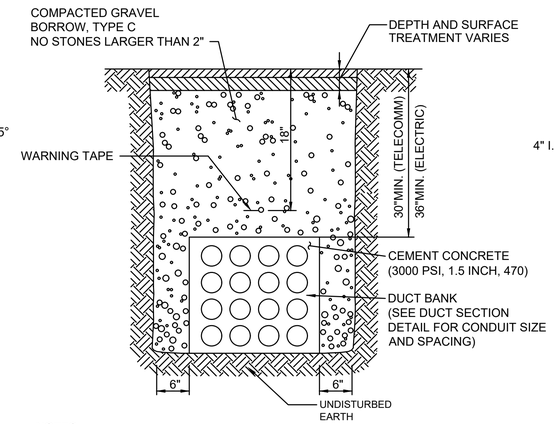

NOTES:

1. BURIAL DEPTHS FOR CONDUIT SHALL BE MAINTAINED NOT LESS THAN 30" FROM THE TOP OF THE CONCRETE ENCASEMENT TO GRADE DURING ALL PHASES OF CONSTRUCTION.

2. USE METALLIC TRACING/WARNING TAPE OVER ALL DUCTS.

3. MULTIPLE DUCT BANKS LAID WITHIN THE SAME TRENCH SHALL BE SEPARATED BY AT LEAST A SHEET OF PLYWOOD.

TYPICAL CONCRETE ENCASED DUCT BANK TRENCH SECTION

SCALE: NTS

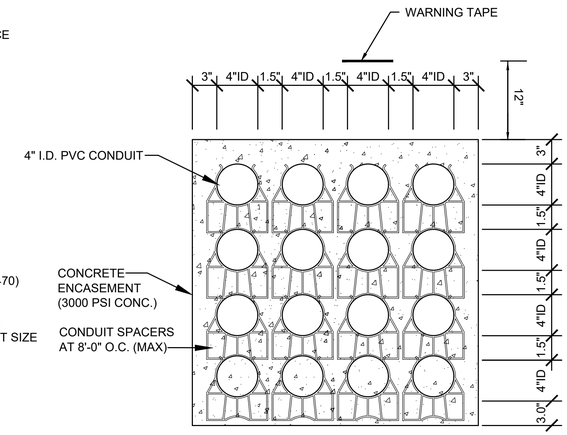

TYPICAL COMMUNICATION DUCT UNDER ROADWAY

SCALE: NTS

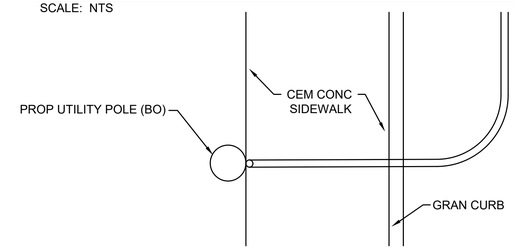

PLAN VIEW

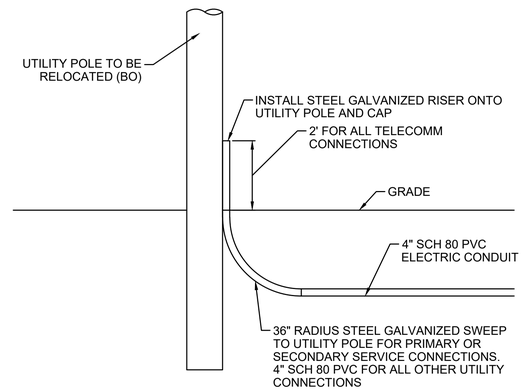

NOTE:

1. FINAL CONNECTIONS SHALL BE COMPLETED BY THE UTILITY OWNER. CABLE WORK SHALL BE COMPLETED BY THE UTILITY OWNER AS REQUIRED.
2. WORK SHALL BE COORDINATED WITH UTILITY OWNERS, PROPERTY OWNERS/TENANTS AND THE ENGINEER TO MINIMIZE CUSTOMER SERVICE INTERRUPTIONS.

SERVICE CONNECTION FOR SERVICE RISER

SCALE: NTS

4.2. 38Y-1 Manhole

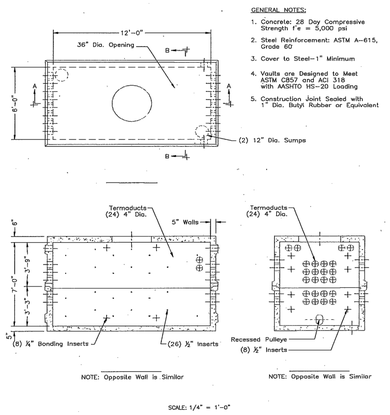

TELECOMMUNICATIONS MANHOLE

SCALE: NTS

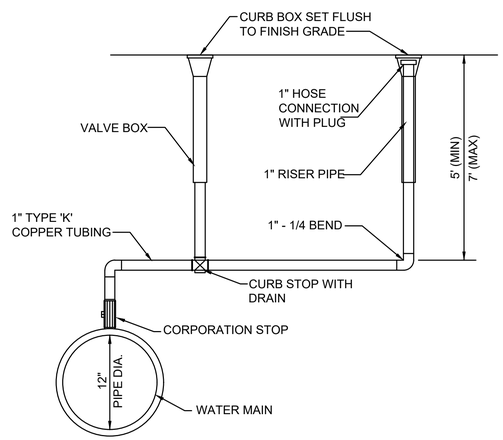

AIR RELEASE VALVE/BLOW OFF ASSEMBLY DETAIL

SCALE: NTS

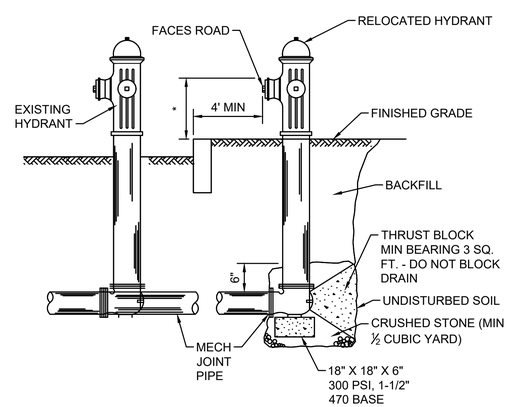

* PER CITY OF WOBURN STANDARD

HYDRANT RELOCATION

SCALE: NTS

WOBURN
NEW BOSTON STREET

STATE	FED. AID PROJ. NO.	SHEET NO.	TOTAL SHEETS
MA	TBD	70	147
PROJECT FILE NO.	604996		

CONSTRUCTION DETAILS

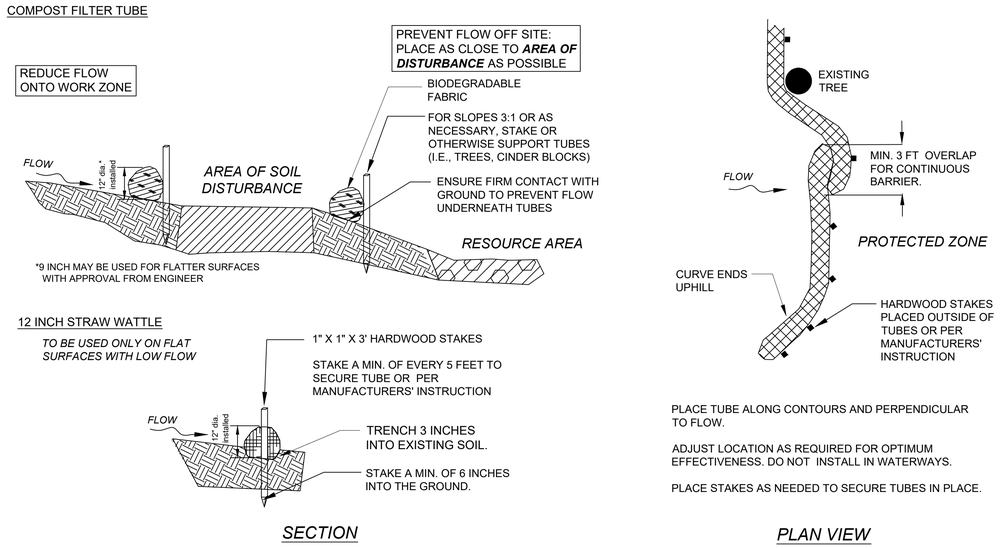

SEDIMENT BARRIERS - COMPOST FILTER TUBES & STRAW WATTLES

SCALE: NTS

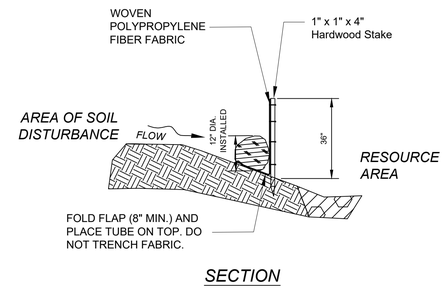

COMPOST FILTER TUBE & SILT FENCE

SCALE: NTS

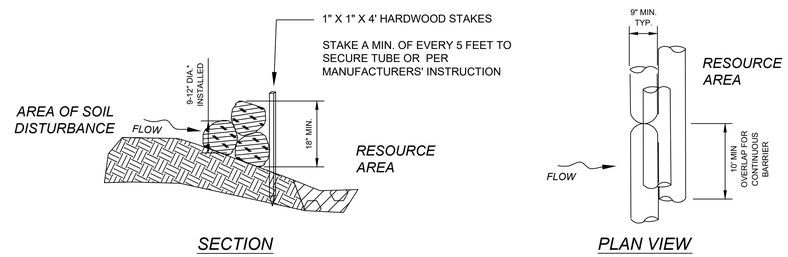

COMPOST FILTER TUBE BERM (SLOPES 2:1 OR STEEPER)

SCALE: NTS

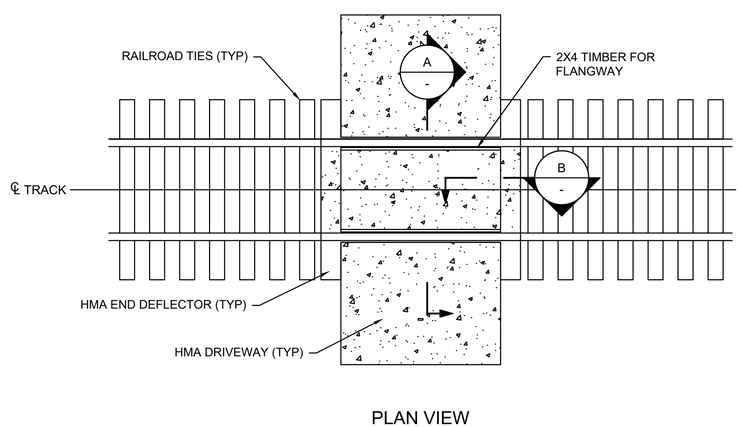

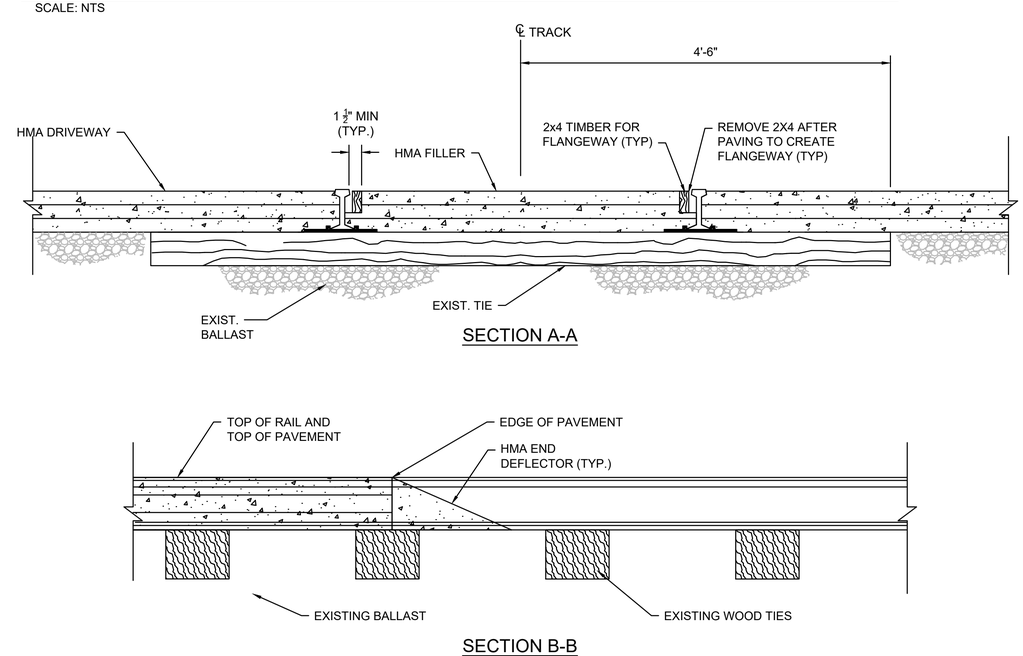

TEMP HMA DRIVEWAY OVER SPUR TRACK

N.T.S.

Source:

4/2013

TR-308

604996_HD(DET).DWG Plotted on 3-Aug-2020 3:40 PM

Plotted on 3-Aug-2020 9:43 PM
604996_HD\DET1.DWG

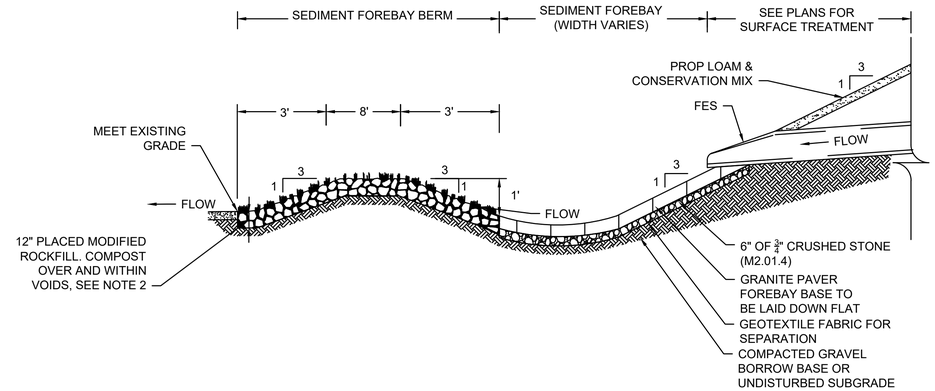

NOTES:

1. APPLY COMPOST MATERIAL OVER AND WITHIN THE MODIFIED ROCKFILL. MATERIAL SHOULD BE PLACED SO THAT SETTLED MATERIAL IS AT OR SLIGHTLY BELOW SURFACE PLANE OF STONE AND SHALL BE WORKED INTO THE VOIDS OF THE MODIFIED ROCK FILL. COMPOST SHALL BE RAKED BY HAND.
2. SEED OVER COMPOST SHALL BE ITEM 765.31- SEEDING - BASIN MIX

SEDIMENT FOREBAY WITH GRANITE PAVER BASE

SCALE: NTS

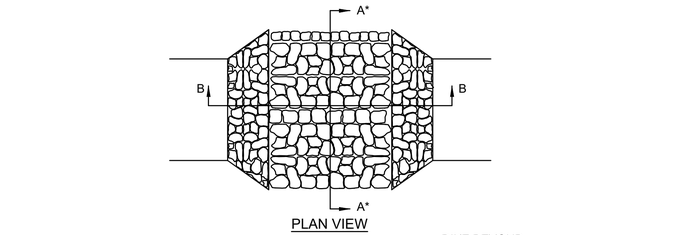

PLAN VIEW

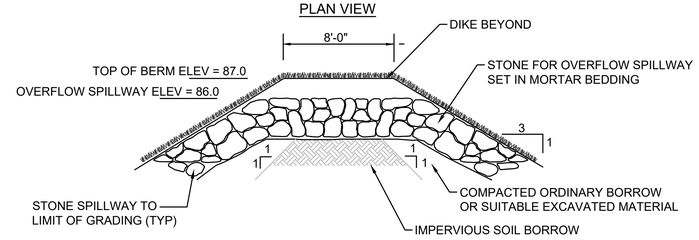

SECTION A-A

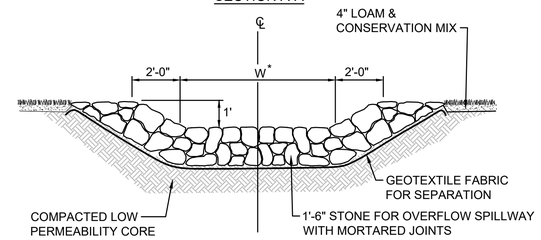

SECTION B-B

STONE FOR OVERFLOW SPILLWAY

SCALE: NTS

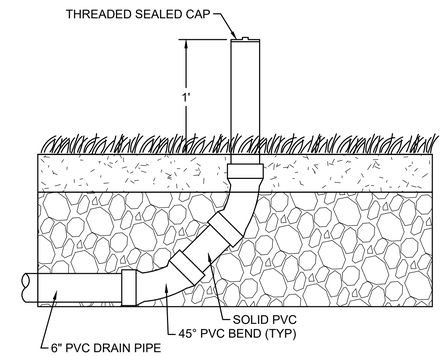

6" CLEANOUT

SCALE: NTS

OCS NO.	INV A	SIZE A (IN.)	INV OVERFLOW	OUTLET PIPE	INV OUT
1	74.0	12	76.0	18" RCP	73.0
2	84.0	4	85.6	12" RCP	83.0

NOTES:

1. PROVIDE OPENINGS FOR PIPES WITH 2" MAX. CLEARANCE TO OUTSIDE OF PIPE. MORTAR ALL PIPE CONNECTIONS.
2. JOINT SEALANT BETWEEN PRECAST SECTIONS SHALL BE PREFORMED BUTYL RUBBER.

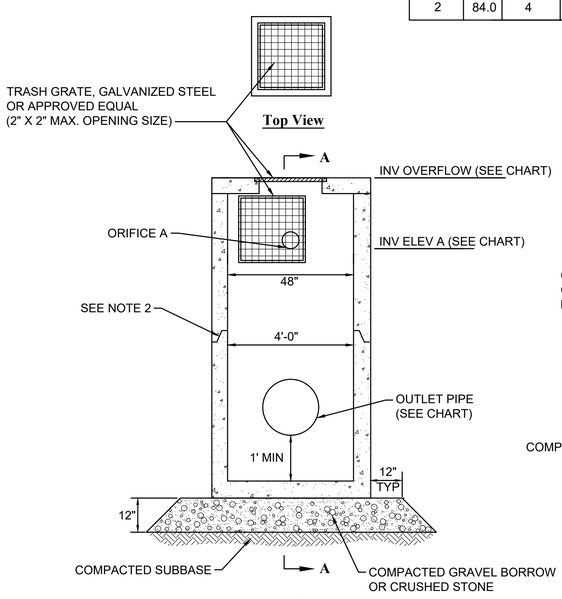

FRONT VIEW

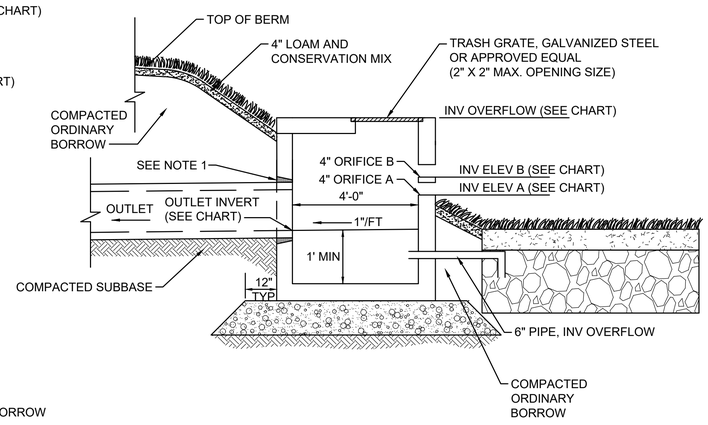

SIDE VIEW A-A

STORMWATER BASIN OUTLET CONTROL STRUCTURE

SCALE: NTS

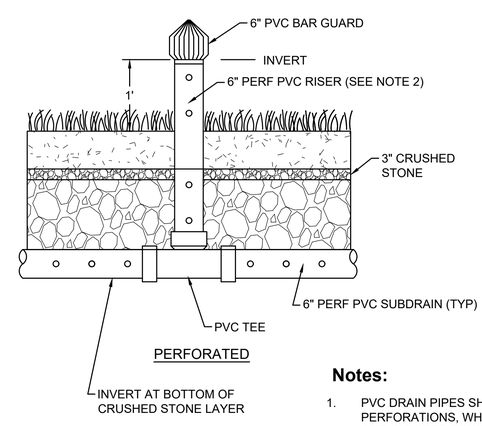

PERFORATED

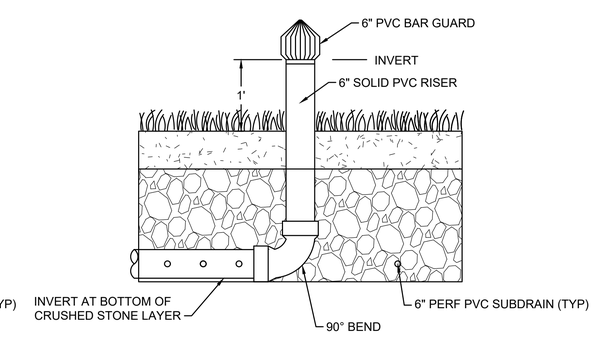

NON-PERFORATED

Notes:

1. PVC DRAIN PIPES SHALL CONFORM TO ASTM/ANSI D 2729 OR ASTM F810. PERFORATIONS, WHEN APPLICABLE, SHALL BE 3/4" HOLES ON 5" CENTERS AND IN THREE ROWS 120° APART.
2. NO PERFORATIONS SHALL BE DRILLED IN RISER PIPE FOR LENGTH OF PIPE WITHIN 8" OF COMPOST TOPSOIL.

6" PVC PERFORATED RISER

SCALE: NTS

604996_HD(DET).DWG Plotted on 3-Aug-2020 3:40 PM

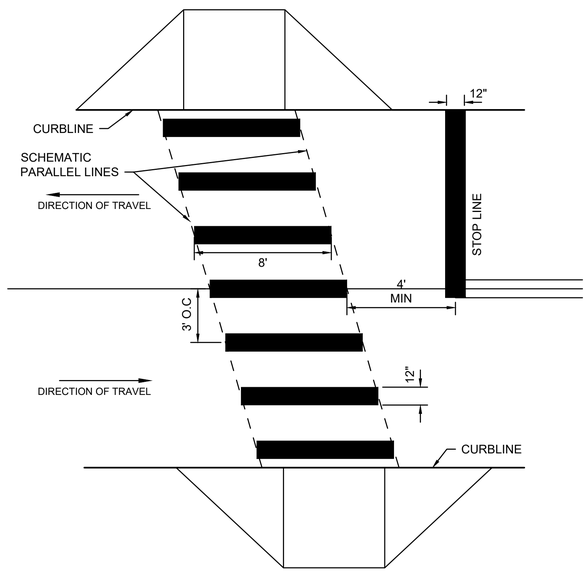

NOTES:

1. ALL EXISTING CROSSWALK MARKINGS SHALL BE FULLY ERADICATED BY APPROVED METHOD PRIOR TO THE APPLICATION OF PROPOSED MARKINGS.
2. ALL 12" THERMOPLASTIC LINES SHALL BE APPLIED IN ONE APPLICATION, NO COMBINATION OF LINES (TWO - 6" LINES) WILL BE ACCEPTED.
3. LAYOUT OF CROSSWALKS SHALL BE ORIENTATED IN THE DIRECTION OF TRAVEL AND LOCATED OUTSIDE OF THE WHEEL PATH OF VEHICLES. LAYOUT SHALL BE APPROVED BY THE TOWN PRIOR TO APPLICATION OF THERMOPLASTIC.
4. ALL CROSSWALKS INSTALLED SHALL CONFORM TO THE RELEVANT PROVISIONS OF THE MASSACHUSETTS HIGHWAY DEPARTMENT "STANDARD SPECIFICATION FOR HIGHWAY AND BRIDGES" DATED 1988, SECTION 860 FOR REFLECTORIZED LINE (THERMO-PLASTIC) & MATERIAL M7.01.20, LATEST REVISIONS.

CONTINENTAL-STYLE CROSSWALK - 12" WIDE LINES

SCALE: N.T.S. DWG: PM-27 DATE: MAY 2017

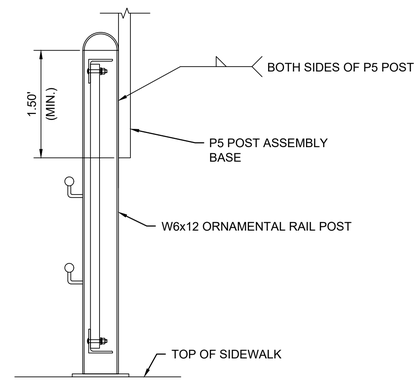

SIGN POST ON RAIL ATTACHMENT

SCALE: N.T.S.

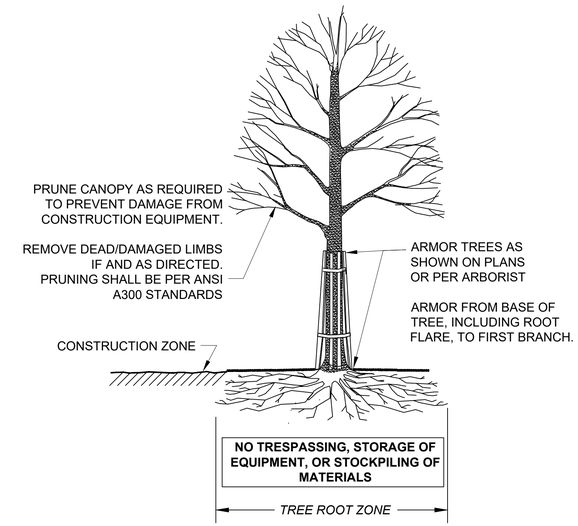

TREE PROTECTION TRUNK

SCALE: N.T.S.

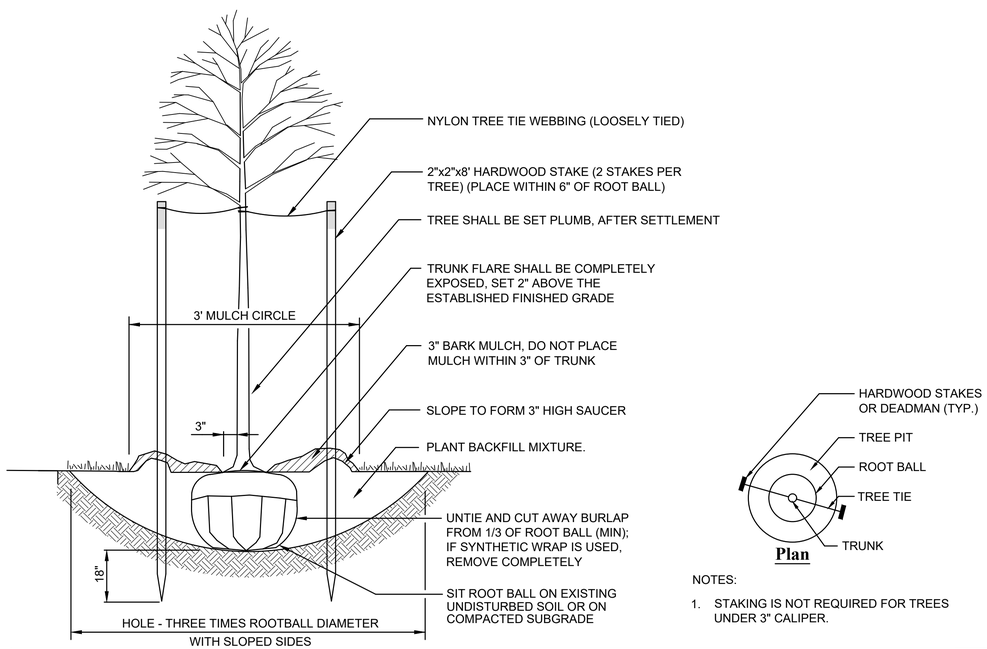

NOTES:

1. STAKING IS NOT REQUIRED FOR TREES UNDER 3" CALIPER.

TREE PLANTING

SCALE: N.T.S.

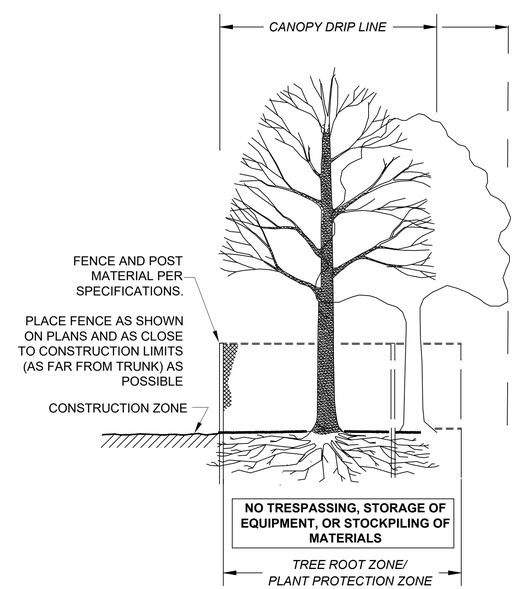

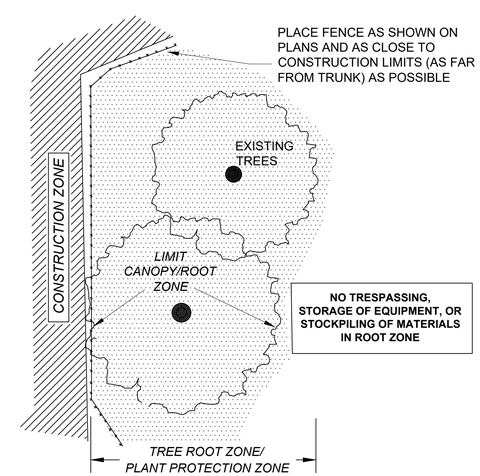

TREE PROTECTION ROOT ZONE

SCALE: N.T.S.

WOBURN
NEW BOSTON STREET

STATE	FED. AID PROJ. NO.	SHEET NO.	TOTAL SHEETS
MA	TBD	73	147
PROJECT FILE NO.	604996		

CONSTRUCTION DETAILS

604996_HD(DET).DWG Plotted on 3-Aug-2020 3:40 PM

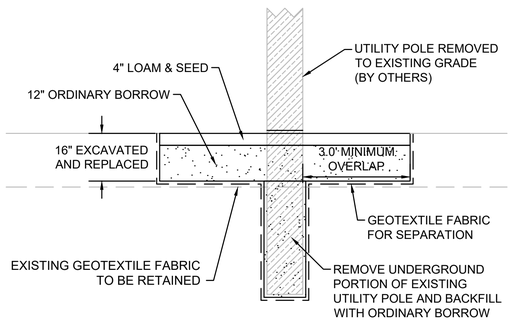

REMOVAL OF UTILITY POLE IN EXISTING CAP

SCALE: NTS

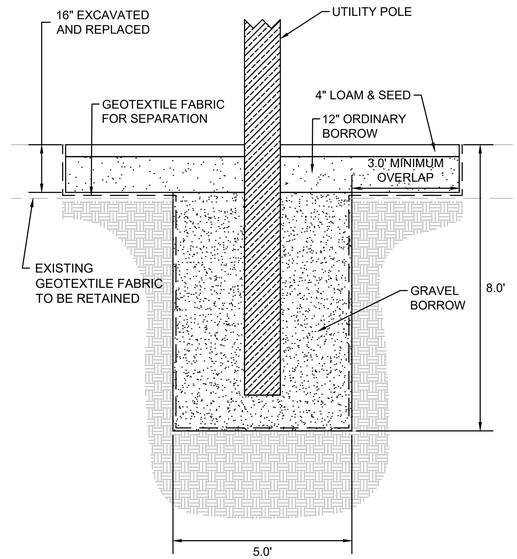

UTILITY POLE THROUGH EXISTING CAP

SCALE: NTS

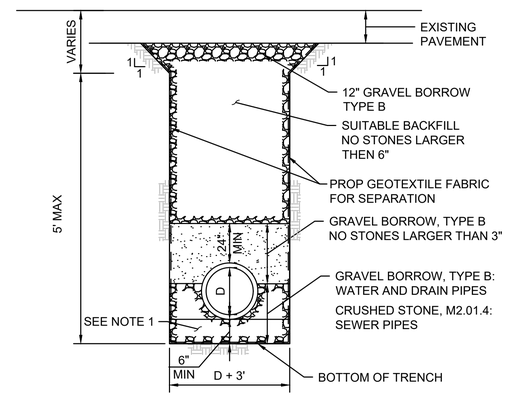

NOTES:
1. SOFT OR UNSUITABLE MATERIAL EXISTING BELOW THE REQUIRED BEDDING GRADE SHALL BE REMOVED AS DIRECTED AND REPLACED WITH SAND, GRAVEL, CRUSHED STONE OR OTHER SUITABLE MATERIAL AND THOROUGHLY COMPACTED.

TRENCH IN EXISTING PAVEMENT EQUIVALENT CAP

SCALE: NTS

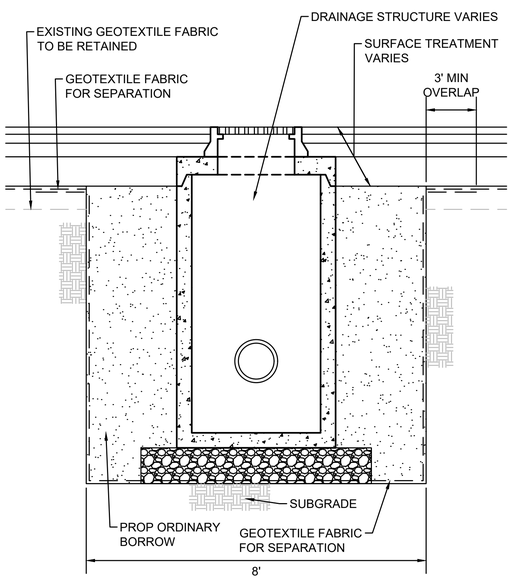

DRAINAGE STRUCTURE IN EXISTING CAP

SCALE: NTS

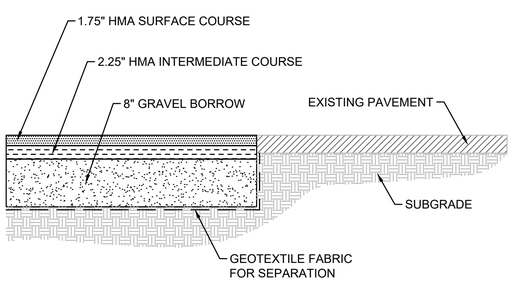

DRIVEWAY TIE-IN TO EXIST PAVEMENT EQUIVALENT CAP

SCALE: NTS

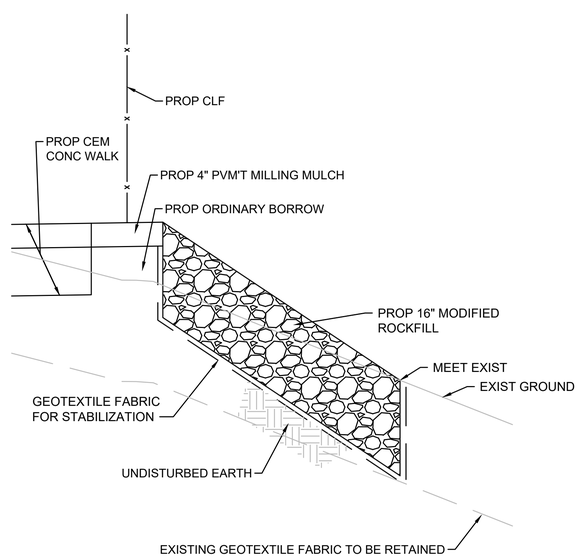

MODIFIED ROCK SLOPE TIE-IN TO EXISTING CAP

SCALE: NTS

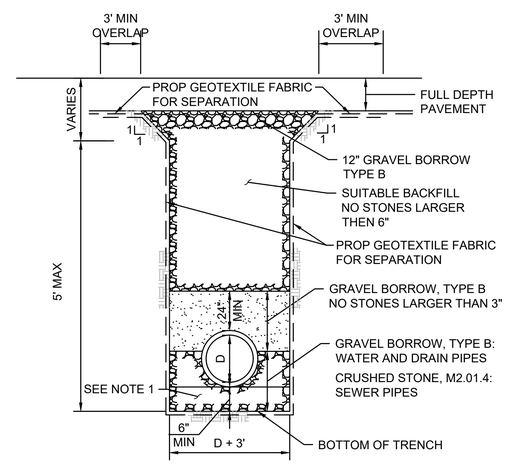

NOTES:
1. SOFT OR UNSUITABLE MATERIAL EXISTING BELOW THE REQUIRED BEDDING GRADE SHALL BE REMOVED AS DIRECTED AND REPLACED WITH SAND, GRAVEL, CRUSHED STONE OR OTHER SUITABLE MATERIAL AND THOROUGHLY COMPACTED.

TRENCH IN FULL DEPTH PAVEMENT IN CLASS C SOIL

SCALE: NTS

WHEELCHAIR RAMP DATA

NO.	LOCATION (REF. POINT)	ROADWAY GUTTER	LEFT SIDE		RIGHT SIDE	
			TRANS	OPENING ELEV	TRANS	OPENING ELEV
1	101+02.5 16.0' RT (NEW BOSTON STREET)	0.38%	7'-8"	76.96	N/A	76.92
12	116+91.4 12.9' LT (NEW BOSTON STREET)	-0.45%	7'-8"	69.84	6'-6"	69.82

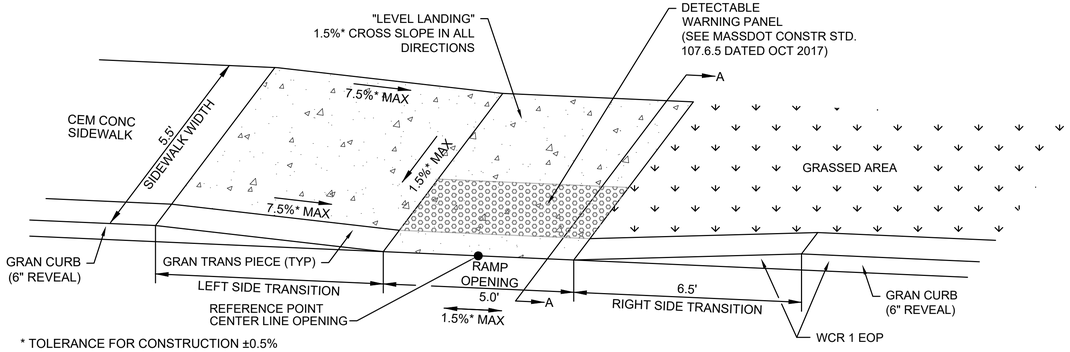

* TOLERANCE FOR CONSTRUCTION ±0.5%

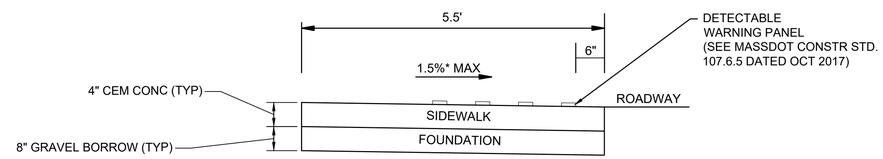

SECTION A-A

NOT TO SCALE

WHEELCHAIR RAMP - LESS THAN 6.5 FEET WITH GRASS ON RIGHT

SCALE: N.T.S.

WHEELCHAIR RAMP DATA

NO.	LOCATION (REF. POINT)	ROADWAY GUTTER	LEFT SIDE		RIGHT SIDE	
			TRANS	OPENING ELEV	TRANS	OPENING ELEV
2	101+32.5 16.0' LT (NEW BOSTON STREET)	0.50%	6'-6"	76.87	7'-8"	76.90
14	24+87.3 16.0' RT (315 NBS DRIVE)	-0.62%	N/A	87.56	7'-8"	87.62

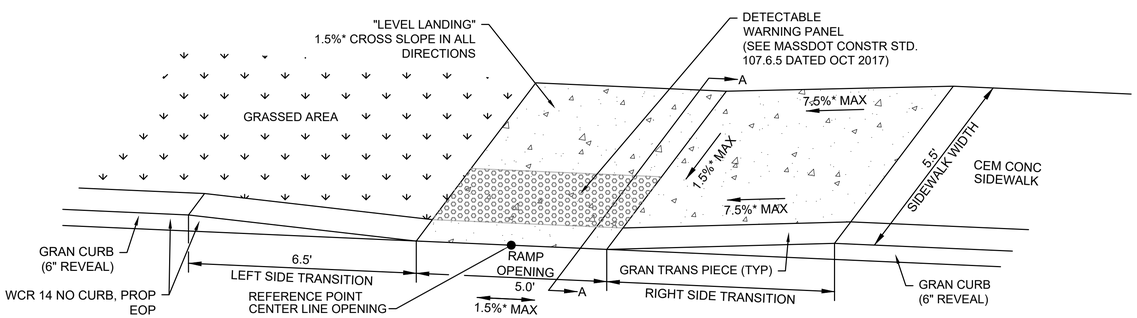

* TOLERANCE FOR CONSTRUCTION ±0.5%

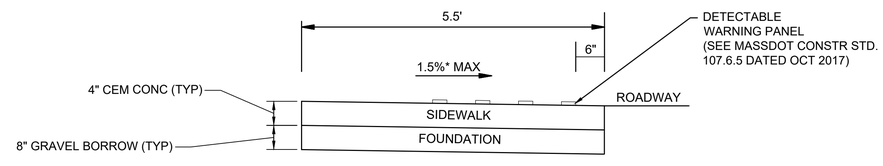

SECTION A-A

NOT TO SCALE

WHEELCHAIR RAMP - LESS THAN 6.5 FEET WITH GRASS ON LEFT

SCALE: N.T.S.

LEGEND

- LIMITS OF CEM CONC RAMP
- DETECTABLE WARNING PANEL

WHEELCHAIR RAMP DATA

NO.	LOCATION (REF. POINT)	SIDEWALK WIDTH	RAMP OPENING	ROADWAY GUTTER	LEFT SIDE		RIGHT SIDE	
					TRANS	OPENING ELEV	TRANS	OPENING ELEV
5	20+29.4 31.6' LT (315 NBS DRIVE)	5.5'	5.0'	-1.26%	6'-6"	96.55	9'-0"	96.64
6	20+31.31 21.5' RT (315 NBS DRIVE)	6.5'	6.5'	-2.66%	6'-6"	98.67	11-0"	98.93
15	106+00.00 16.0' RT (NEW BOSTON STREET)	5.5'	5.0'	5.26%	15'-0"	95.66	6-6"	95.40
16	106+00.00 16.0' RT (NEW BOSTON STREET)	5.5'	5.0'	3.73%	6'-6"	95.41	14-0"	95.63

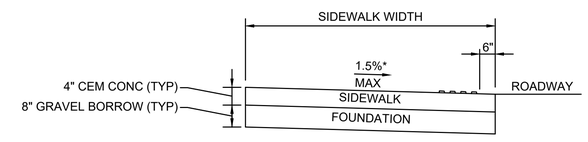

SECTION A-A

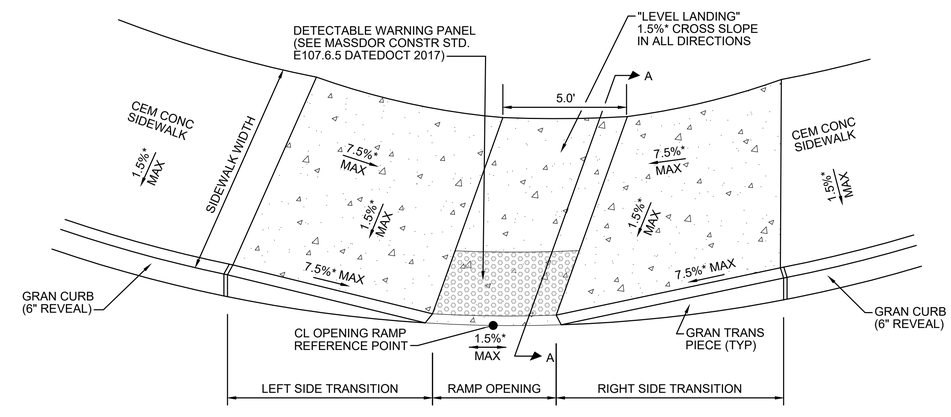

*TOLERANCE FOR CONSTRUCTION ±0.5%

OBLIQUE VIEW

WHEELCHAIR RAMP - CURVED

SCALE: NTS

WOBURN
NEW BOSTON STREET

STATE	FED. AID PROJ. NO.	SHEET NO.	TOTAL SHEETS
MA	TBD	74	147
PROJECT FILE NO.	604996		

CONSTRUCTION DETAILS

604996_HD(DET).DWG Plotted on 3-Aug-2020 3:40 PM

WOBURN
NEW BOSTON STREET

STATE	FED. AID PROJ. NO.	SHEET NO.	TOTAL SHEETS
MA	TBD	75	147
PROJECT FILE NO.	604996		

CONSTRUCTION DETAILS

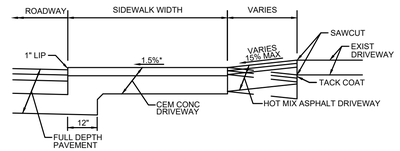

SECTION A-A

LEGEND

LIMITS OF CEM CONC DRIVE

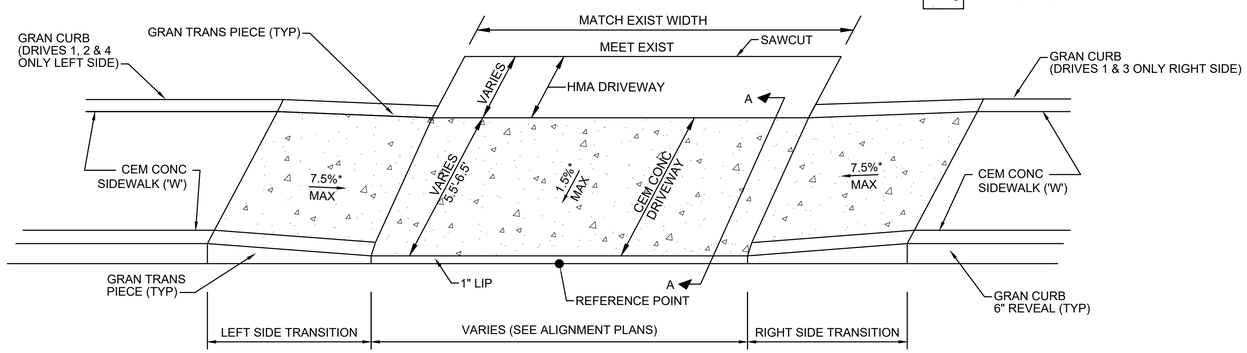

OBLIQUE VIEW

TRANSITION CURB FOR DRIVEWAY WITH SIDEWALK							
NO.	LOCATION (REF. POINT)	SIDEWALK WIDTH 'W'	ROADWAY GUTTER	LEFT SIDE		RIGHT SIDE	
				TRANS	OPENING ELEV	TRANS	OPENING ELEV
1	112+62.00 16.0' LT (NEW BOSTON STREET)	6.5'-5.5'	-3.83%	14'-0"	74.43	6'-6"	73.64
2	113+62.12 16.0' LT (NEW BOSTON STREET)	5.5'	-1.16%	9'-0"	72.11	6'-6"	71.94
3	114+63.28 16.0' LT (NEW BOSTON STREET)	5.5'	-0.70%	7'-8"	71.67	6'-6"	71.20
4	116+34.91 14.5' LT (NEW BOSTON STREET)	5.5'	-0.45%	7'-8"	70.19	6'-6"	69.92
5	24+00.33 16.0' RT (315 NBS DRIVE)	5.5'	-0.60%	6'-6"	88.07	7'-8"	88.20

CEM CONC DRIVEWAY

SCALE: N.T.S.

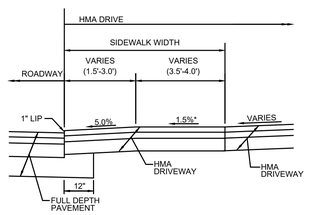

SECTION A-A

LEGEND

LIMITS OF CEM CONC RAMP

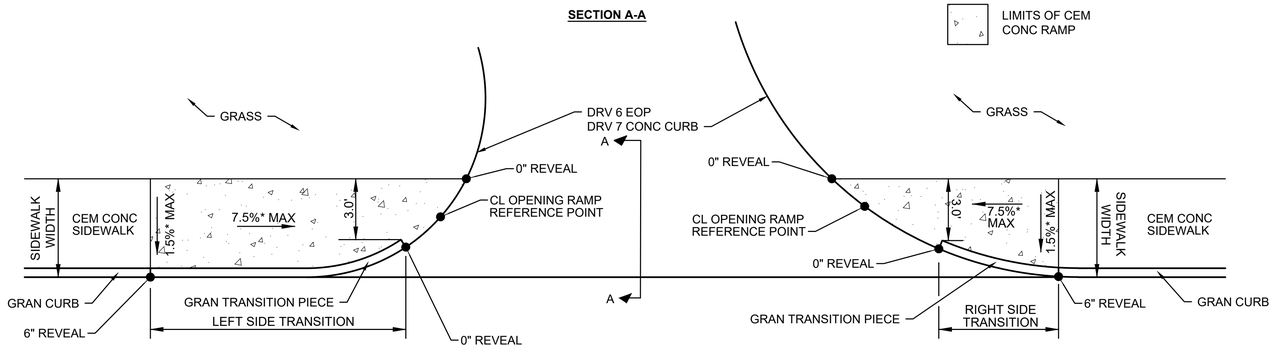

DRIVEWAY DATA

NO.	LOCATION (REF. POINT)	SIDEWALK WIDTH	ROADWAY GUTTER	LEFT SIDE TRANS	RIGHT SIDE TRANS
6	114+19.65 20.7' RT (NEW BOSTON STREET)	6.5'	-0.50%	6'-6"	7'-8"

*TOLERANCE FOR CONSTRUCTION ±0.5%

HMA DRIVEWAY

SCALE: N.T.S.

604996_HD(DET).DWG Plotted on 3-Aug-2020 3:40 PM

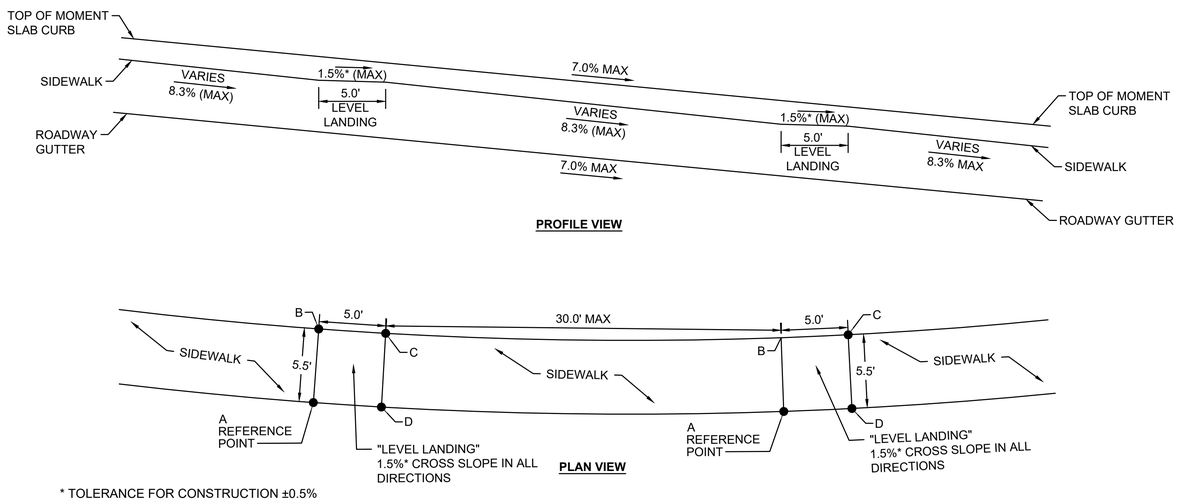

* TOLERANCE FOR CONSTRUCTION ±0.5%

LEVEL LANDING DATA

NO.	LOCATION (REF. POINT)	ELEVATION A	B	C	D
1	109+11.20 17.0' LT (NEW BOSTON STREET)	96.00	96.05	95.98	95.93
2	109+48.14 17.0' LT (NEW BOSTON STREET)	93.50	93.56	93.48	93.43
3	109+85.07 17.0' LT (NEW BOSTON STREET)	91.00	91.05	90.98	90.93
4	109+93.03 17.0' RT (NEW BOSTON STREET)	90.90	90.95	91.04	90.98
5	110+22.00 17.0' LT (NEW BOSTON STREET)	88.50	88.55	88.48	88.43
6	110+26.37 17.0' RT (NEW BOSTON STREET)	88.56	88.62	88.70	88.64
7	110+58.94 17.0' LT (NEW BOSTON STREET)	86.00	86.05	85.68	85.92

LEVEL LANDING DATA

NO.	LOCATION (REF. POINT)	ELEVATION A	B	C	D
8	110+59.70 17.0' RT (NEW BOSTON STREET)	86.22	86.28	86.36	86.30
9	110+93.06 17.0' RT (NEW BOSTON STREET)	83.89	83.95	84.02	83.96
10	110+95.70 17.0' LT (NEW BOSTON STREET)	83.49	83.55	83.48	83.43
11	111+28.06 17.0' RT (NEW BOSTON STREET)	81.45	81.51	81.58	81.52
12	111+30.70 17.0' LT (NEW BOSTON STREET)	81.00	81.05	80.99	80.93
13	111+63.06 17.0' RT (NEW BOSTON STREET)	79.22	79.28	79.36	79.30
14	111+65.70 17.0' LT (NEW BOSTON STREET)	78.85	78.90	78.84	78.78
15	111+98.06 17.0' RT (NEW BOSTON STREET)	77.33	77.39	77.46	77.40

TYPICAL SIDEWALK LEVEL LANDING LAYOUT

SCALE: NTS

WHEELCHAIR RAMP DATA

NO.	LOCATION (REF. POINT)	SIDEWALK WIDTH	LEFT SIDE ROADWAY GUTTER	LEFT SIDE TRANS	LEFT SIDE OPENING ELEV	RIGHT SIDE ROADWAY GUTTER	RIGHT SIDE TRANS	RIGHT SIDE OPENING ELEV
3	104+04.44 19.6' LT (NEW BOSTON STREET)	5.5'	5.00%	6'-6"	85.87	---	---	85.96
4	104+51.57 19.6' LT (NEW BOSTON STREET)	5.5'	---	---	88.07	5.00%	15'-0"	88.16
7	108+94.08 20.7' RT (NEW BOSTON STREET)	6.5'	---	---	96.44	-5.27%	15'-0"	96.80
8	109+52.72 20.6' RT (NEW BOSTON STREET)	6.1'	-6.70%	6'-6"	92.83	---	---	93.09
13	24+42.27 19.6' LT (315 NBS DRIVE)	5.5'	-0.62%	7'-8"	87.89	---	---	87.85

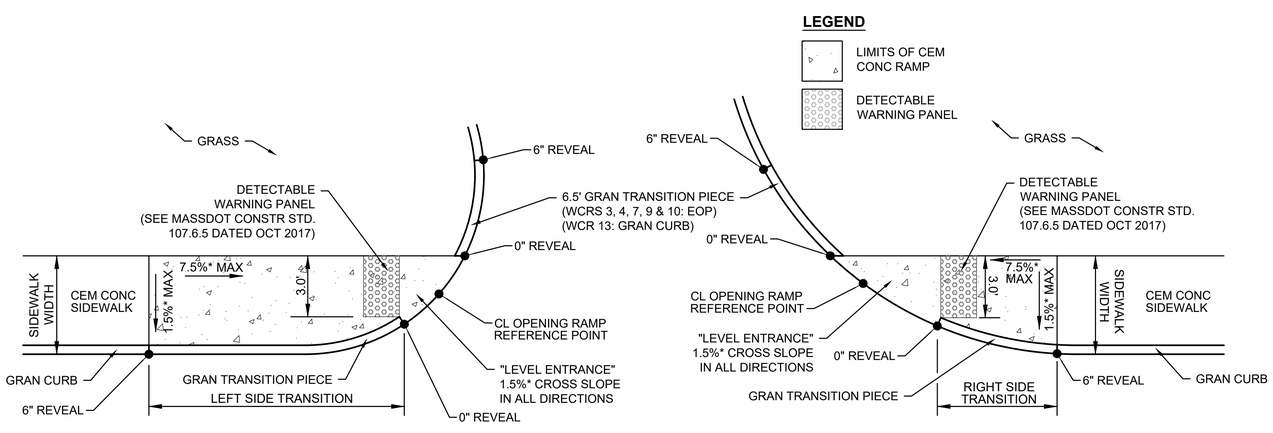

*TOLERANCE FOR CONSTRUCTION ±0.5%

WHEELCHAIR RAMP FOR ONE CONTINUOUS DIRECTION OF PEDESTRIAN TRAVEL

SCALE: N.T.S.

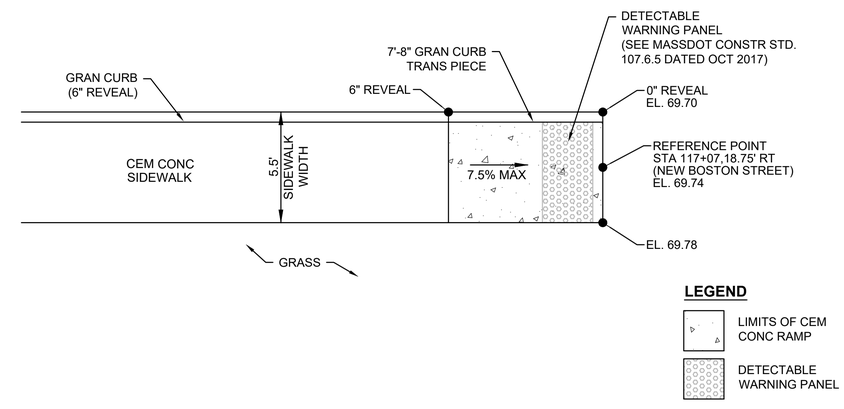

WHEELCHAIR RAMP 11

SCALE: N.T.S.

604996_HD(DET).DWG Plotted on 3-Aug-2020 3:40 PM

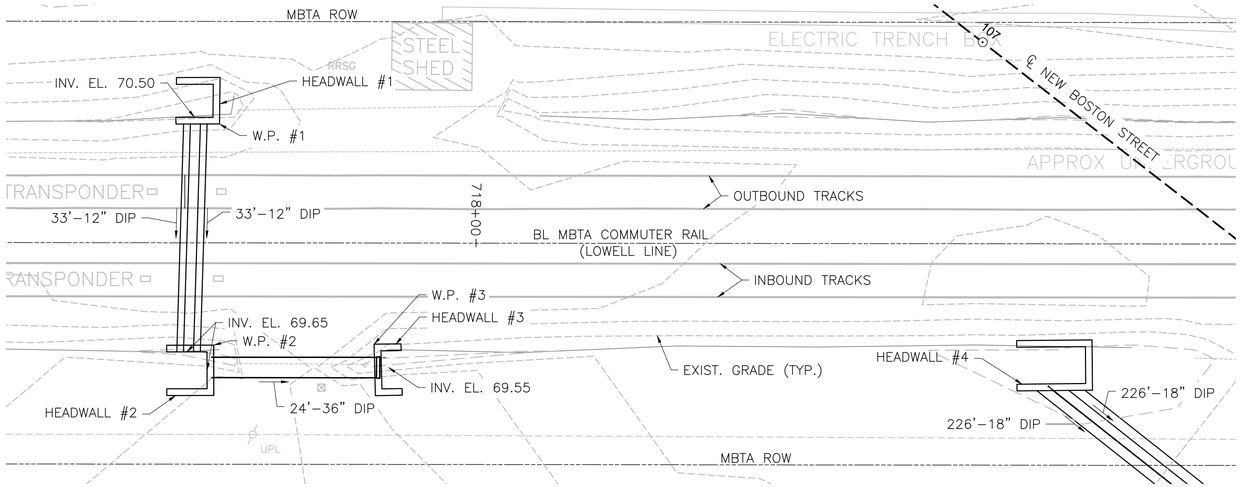

GENERAL PLAN
SCALE: $\frac{3}{16}$" = 1'-0"

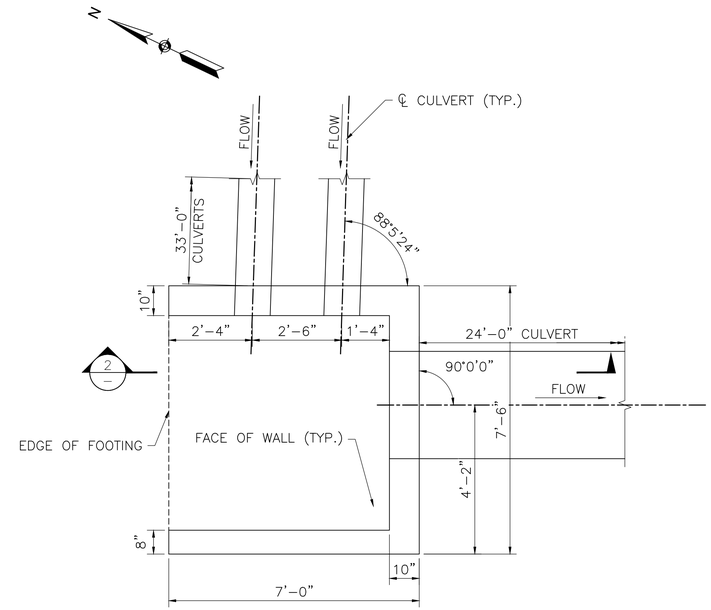

HEADWALL #2 – PLAN VIEW
SCALE: $\frac{1}{2}$" = 1'-0"

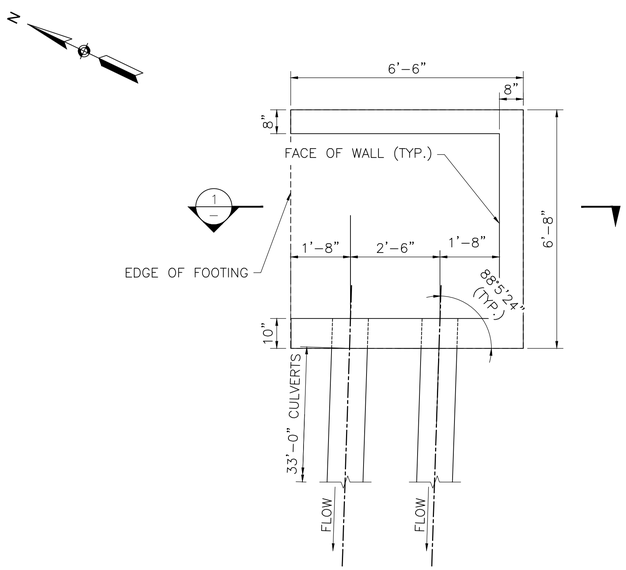

HEADWALL #1 – PLAN VIEW
SCALE: $\frac{1}{2}$" = 1'-0"

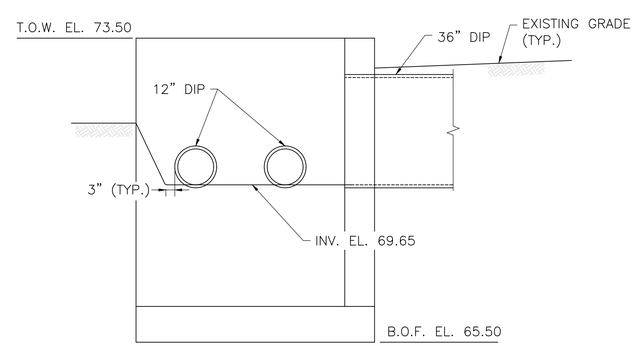

SECTION 2 – HEADWALL #2 ELEVATION
SCALE: $\frac{1}{2}$" = 1'-0"

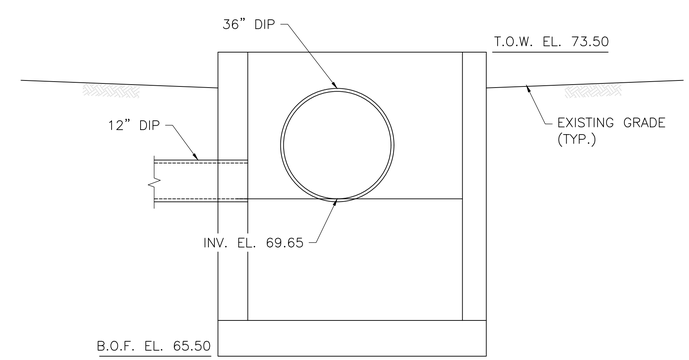

SECTION 3 – HEADWALL #2
SCALE: $\frac{1}{2}$" = 1'-0"

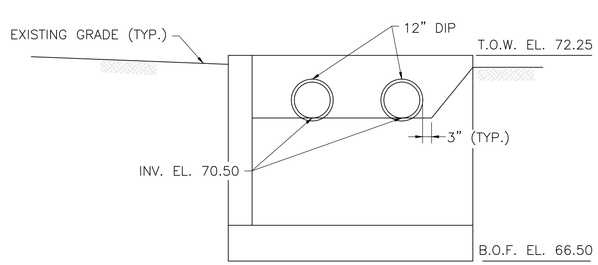

SECTION 1 – HEADWALL #1 ELEVATION
SCALE: $\frac{1}{2}$" = 1'-0"

WORKING POINT	STATION ALONG ℄ MBTA COMMUTER RAIL (LOWELL LINE)	OFFSET
W.P. #1	718+38.25	17.72' RT.
W.P. #2	718+39.09	15.28' LT.
W.P. #3	718+15.09	15.25' LT.
W.P. #4	717+08.16	14.32' LT.

NOTES:

1. FOR TYPICAL WALL SECTIONS AND CORNER REINFORCEMENT DETAILS REFER TO SHEET 78.
2. FOR HEADWALLS 3 & 4 PLANS AND ELEVATIONS REFER TO SHEET 78.
3. THE FACTORED BEARING PRESSURE = 1.31 KSF PER AASHTO LRFD BRIDGE DESIGN SPECIFICATIONS STRENGTH I LOAD COMBINATION
4. MINIMUM FACTORED BEARING RESISTANCE = 5.53 KSF. FACTORED BEARING RESISTANCE IS THE PRODUCT OF THE NOMINAL BEARING RESISTANCE AND A RESISTANCE FACTOR OF 0.65.

WOBURN
NEW BOSTON STREET

STATE	FED. AID PROJ. NO.	SHEET NO.	TOTAL SHEETS
MA	TBD	77	147
PROJECT FILE NO.	604996		

HEADWALL DETAILS

604996_HD(HEADWALL-DET).DWG Plotted on 3-Aug-2020 3:41 PM

WOBURN
NEW BOSTON STREET

STATE	FED. AID PROJ. NO.	SHEET NO.	TOTAL SHEETS
MA	TBD	78	147
PROJECT FILE NO.	604996		

HEADWALL DETAILS

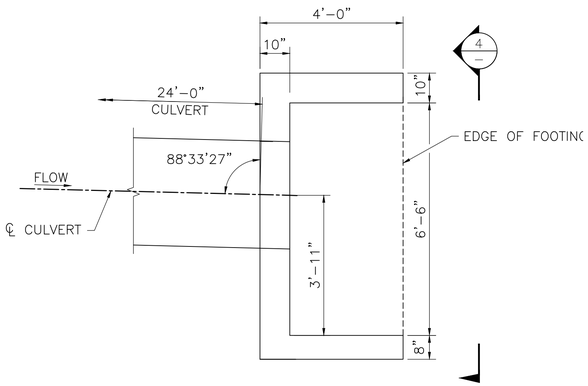

HEADWALL #3 – PLAN

SCALE: $\frac{1}{2}$" = 1'–0"

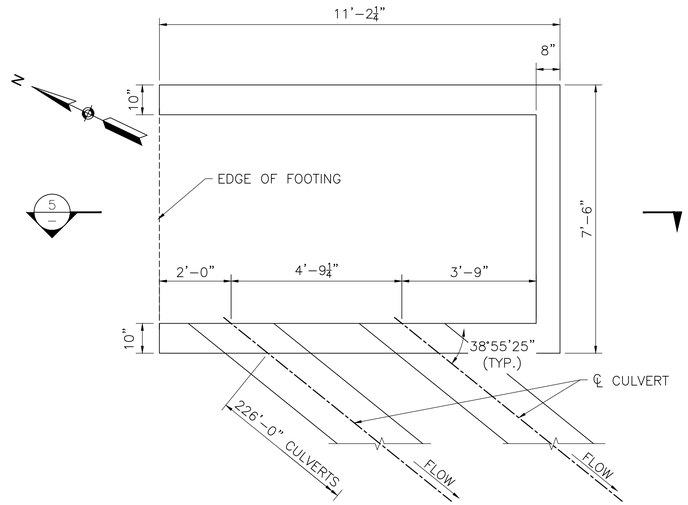

HEADWALL #3 – PLAN

SCALE: $\frac{1}{2}$" = 1'–0"

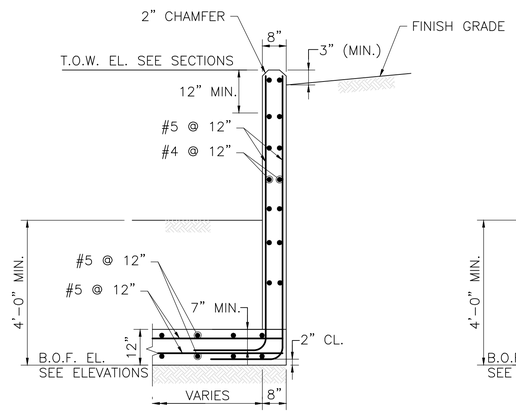

TYPICAL 8" WALL SECTION

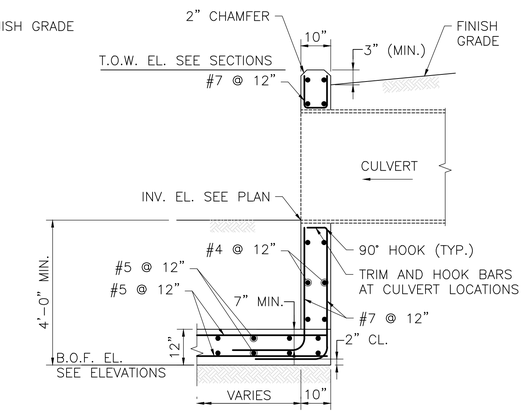

TYPICAL 10" WALL SECTION (THRU CULVERT)

NOTES:

1. SEE "TYPICAL HORIZONTAL REINFORCEMENT AT CORNERS" AND "WALL PIPE PENETRATION DETAIL" THIS SHEET FOR MORE REINFORCEMENT DETAILS.

TYPICAL WALL SECTIONS

SCALE: $\frac{1}{2}$" = 1'–0"

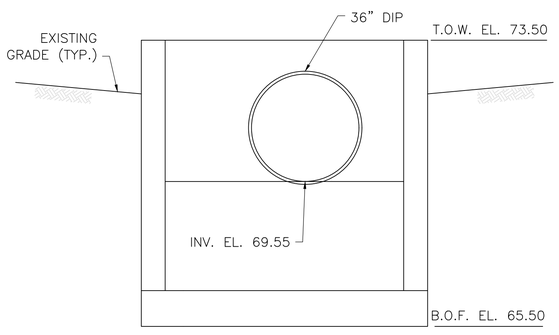

NOTE: CONC. STRUT NOT SHOWN FOR CLARITY.

SECTION 4 – HEADWALL #3

SCALE: $\frac{1}{2}$" = 1'–0"

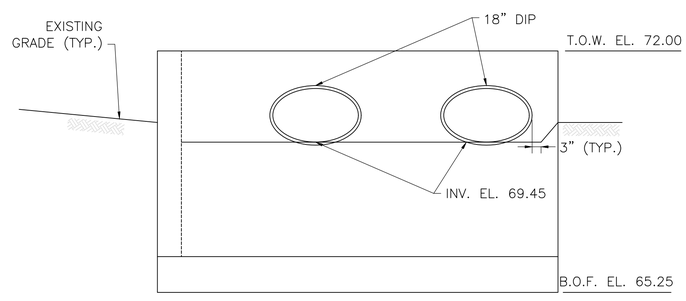

SECTION 5 – HEADWALL #3

SCALE: $\frac{1}{2}$" = 1'–0"

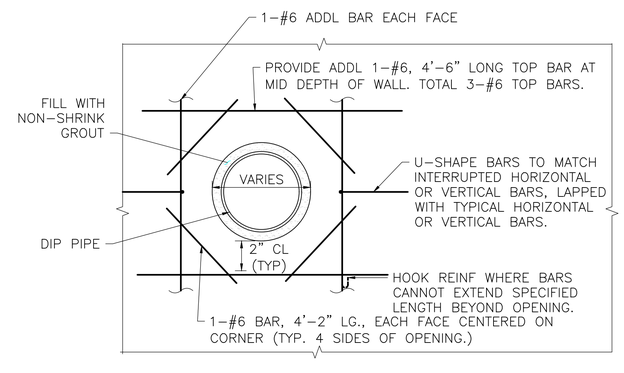

WALL PIPE PENETRATION DETAIL

SCALE: $\frac{3}{4}$" = 1'–0"

NOTES:

1. TYPICAL HORIZONTAL AND VERTICAL WALL REINFORCING NOT SHOWN FOR CLARITY.
2. WALL OPENINGS SHALL BE COORDINATED AND DETAILED ON THE REINFORCEMENT AND PRECAST SHOP DRAWINGS.

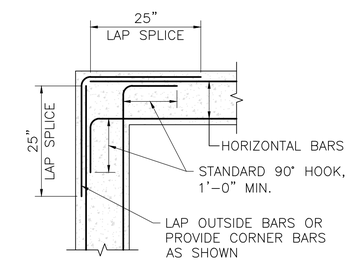

TYPICAL HORIZONTAL REINFORCEMENT AT CORNERS

SCALE: $\frac{3}{4}$" = 1'–0"

604996_HD(HEADWALL-DET).DWG Plotted on 3-Aug-2020 3:42 PM

WOBURN
NEW BOSTON STREET

STATE	FED. AID PROJ. NO.	SHEET NO.	TOTAL SHEETS
MA	TBD	79	147
PROJECT FILE NO.	604996		

RETAINING WALL PLANS

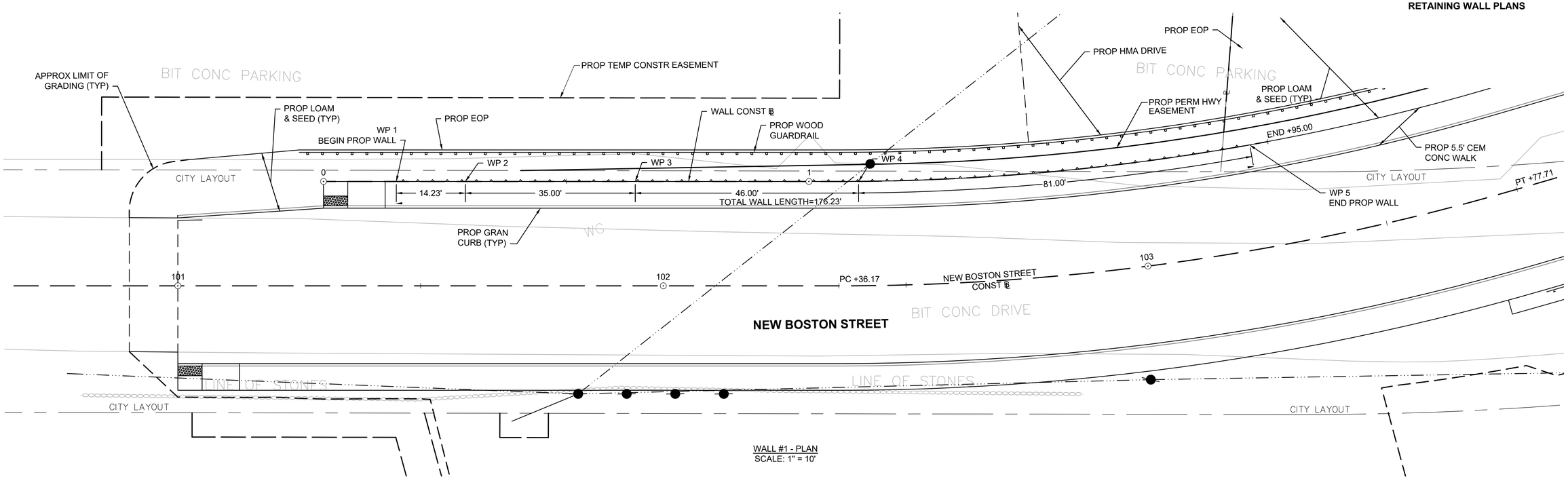

WALL #1 - PLAN
SCALE: 1" = 10'

WALL #1 - WORK POINT DATA			
NO.	WALL CONST ℄	NEW BOSTON STREET CONST ℄	DESCRIPTION
WP 1	STA 0+15.00	STA 101+55.00 21.50' LT	BEGIN PROP WALL
WP 2	STA 0+29.23	STA 101+59.23 21.50' LT	TOP OF WALL GRADE CHANGE
WP 3	STA 0+64.23	STA 101+94.23 21.50' LT	TOP OF WALL GRADE CHANGE
WP 4	STA 1+10.23	STA 102+40.41 21.50' LT	TOP OF WALL GRADE CHANGE
WP 5	STA 1+91.23	STA 103+25.00 21.50' LT	END PROP WALL

NOTE:
FINISH GRADE (BOT.) ELEVATIONS ARE APPROXIMATE. CONTRACTOR TO CONFIRM ELEVATIONS IN FIELD PRIOR TO APPROVAL OF RETAINING WALL SHOP DRAWINGS.

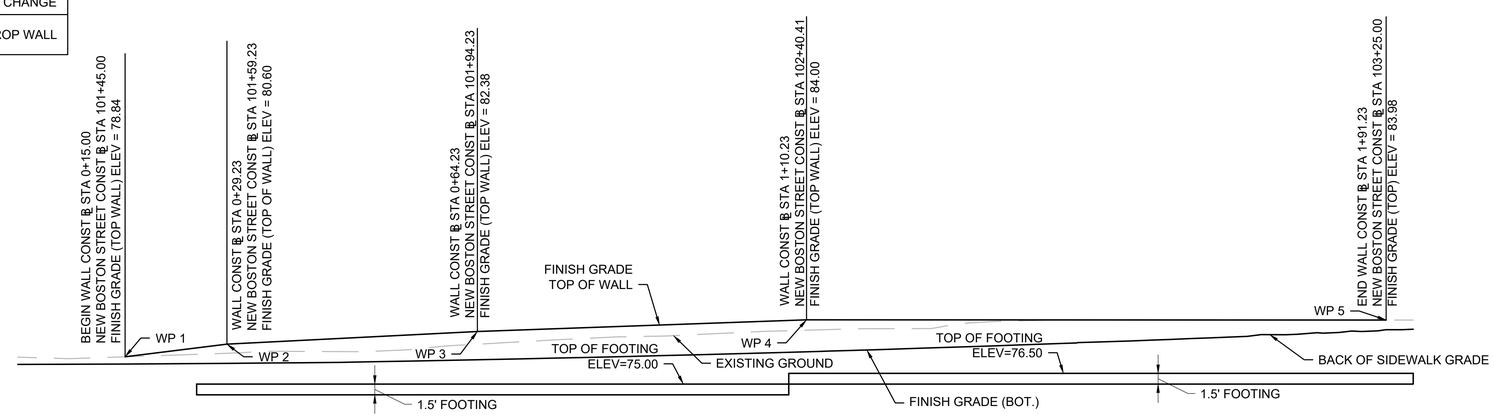

WALL #1 - ELEVATION
SCALE: 1" = 10'

604996_HD(WALL).DWG Plotted on 3-Aug-2020 3:43 PM

604996_HD(WALL).DWG Plotted on 3-Aug-2020 3:43 PM

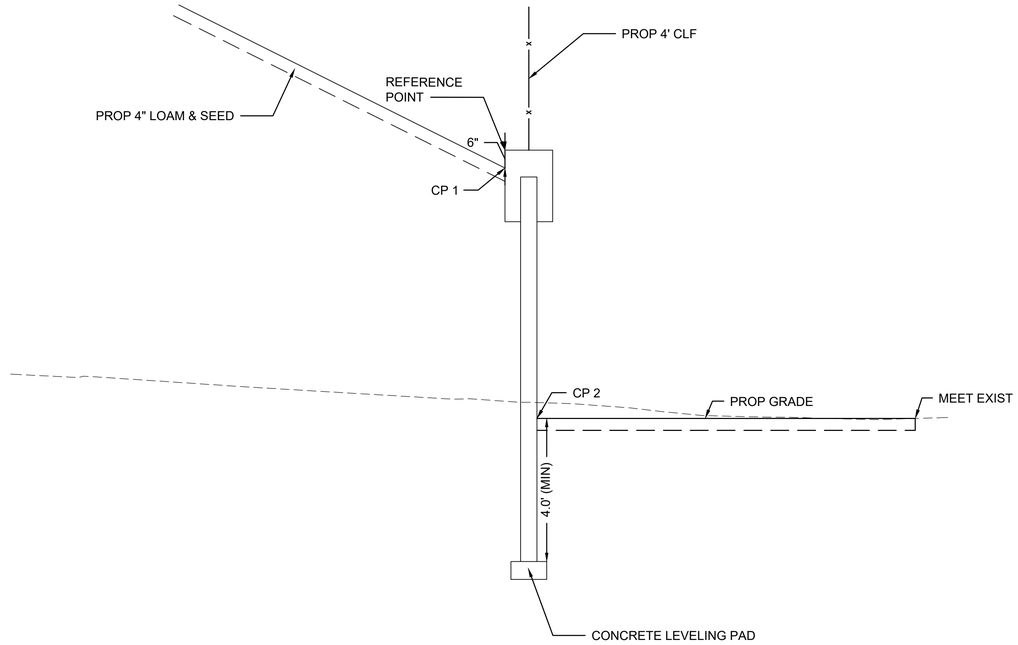

MSE WALL S1 (NE RESINS DRIVE) - WORK POINT DATA			
REFERENCE POINT	CP 1	CP 2	NOTES
10+25, 41.1' LT	91.85	72.96	
10+35, 38.1' LT	88.01	72.42	
10+45, 37.7' LT	87.80	72.59	
10+46, 38.1' LT	87.57	72.59	PI
10+55, 56.0' LT	78.07	72.81	
10+57, 61.4' LT	75.22	73.04	

MSE WALL S1 - NE RESINS DRIVE

SCALE: N.T.S.

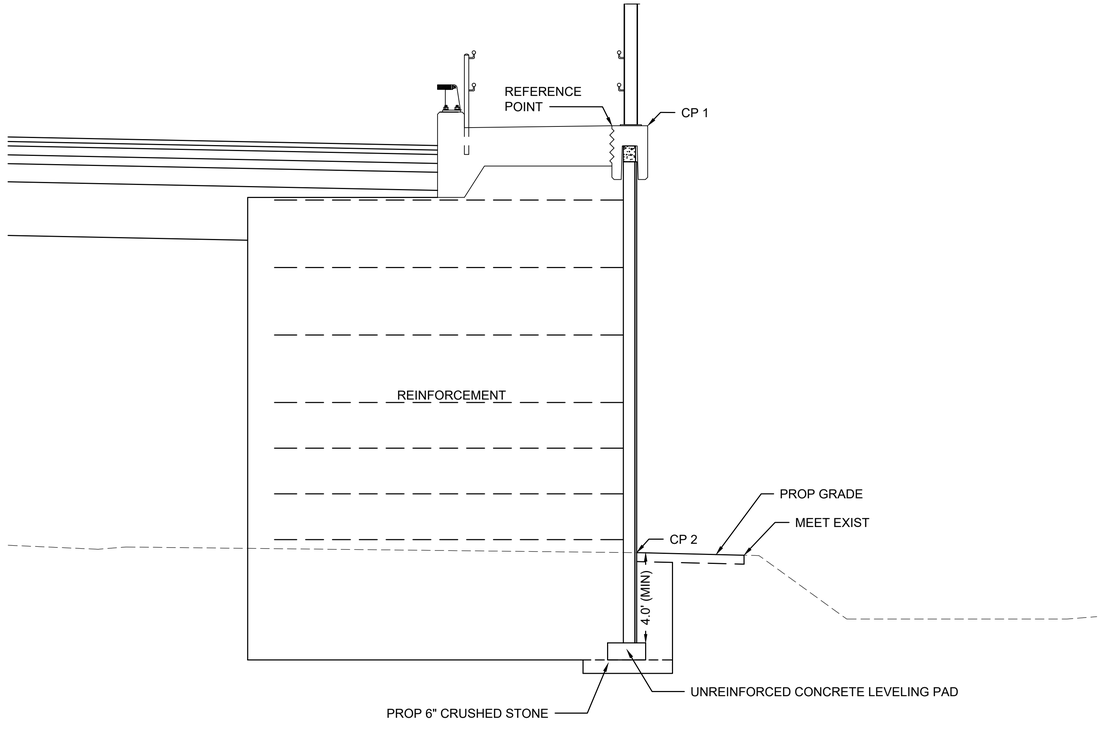

MSE WALL S1 (NEW BOSTON STREET) - WORK POINT DATA			
REFERENCE POINT	CP 1	CP 2	NOTES
109+64.4, 22.5' RT	92.90	72.94	PC, R=363.5
109+65, 22.5' RT	92.83	72.94	
109+90, 22.5' RT	91.00	72.51	
110+15, 22.5' RT	89.21	72.00	
110+40, 22.5' RT	87.53	72.01	
110+65, 22.5' RT	85.86	72.14	
110+90, 22.5' RT	83.99	72.37	
110+92.5, 22.5' RT	83.96	72.37	PT
111+15, 22.5' RT	82.22	72.66	
111+40, 22.5' RT	80.65	72.59	
111+65, 22.5' RT	79.16	72.12	
111+90, 22.5' RT	77.65	72.07	
112+15, 22.5' RT	76.59	71.86	
112+40, 22.5' RT	75.55	72.05	
112+60, 22.5' RT	74.84	71.99	

MSE WALL S1 - NEW BOSTON STREET

SCALE: N.T.S.

WOBURN
NEW BOSTON STREET

STATE	FED. AID PROJ. NO.	SHEET NO.	TOTAL SHEETS
MA	TBD	81	147
PROJECT FILE NO.	604996		

RETAINING WALL PLANS

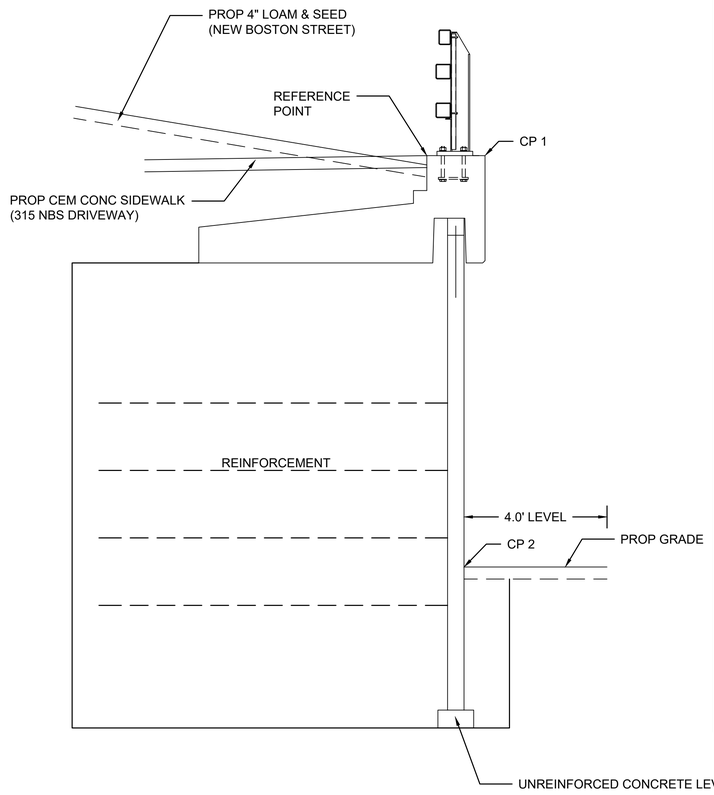

MSE WALL N1 (NEW BOSTON STREET-315 NBS DRIVE) WORK POINT DATA			
REFERENCE POINT	CP 1	CP 2	NOTES
104+98.7, 27.0 LT (NEW BOSTON STREET)	90.29	85.92	PC, R=307.0
105+00, 27.0' LT (NEW BOSTON STREET)	90.35	85.99	
105+25, 27.0' LT (NEW BOSTON STREET)	91.60	85.71	
105+27.5, 27.0' LT (NEW BOSTON STREET)	91.73	85.68	PCC, R=200.0
105+50, 29.5' LT (NEW BOSTON STREET)	92.43	85.44	
105+66.6, 34.9' LT (NEW BOSTON STREET)	92.36	85.24	PT
105+75, 38.7' LT (NEW BOSTON STREET)	92.16	85.14	
106+00, 52.2' LT (NEW BOSTON STREET)	91.97	84.82	
20+50, 55.3' LT (315 NBS DRIVE)	92.76	84.64	
20+74.7, 29.0' LT (315 NBS DRIVE)	96.20	84.20	PC, R=100.0
20+75, 28.8' LT (315 NBS DRIVE)	96.22	84.20	
20+97.2, 21.5' LT (315 NBS DRIVE)	96.19	83.45	PRC, R=121.5
21+00,21.5' LT (315 NBS DRIVE)	96.06	83.25	
21+25 (315 NBS DRIVE)	94.98	81.43	
21+35.2, 21.5' LT (315 NBS DRIVE)	94.53	81.09	PRC, R=178.5
21+50, 21.5' LT (315 NBS DRIVE)	93.90	81.31	
21+75, 21.5' LT (315 NBS DRIVE)	92.83	81.69	
22+00, 21.5' LT (315 NBS DRIVE)	91.77	82.16	
22+25, 21.5' LT (315 NBS DRIVE)	90.86	83.11	
22+44,21.5' LT (315 NBS DRIVE)	90.31	82.00	

MSE WALL N1
SCALE: N.T.S.

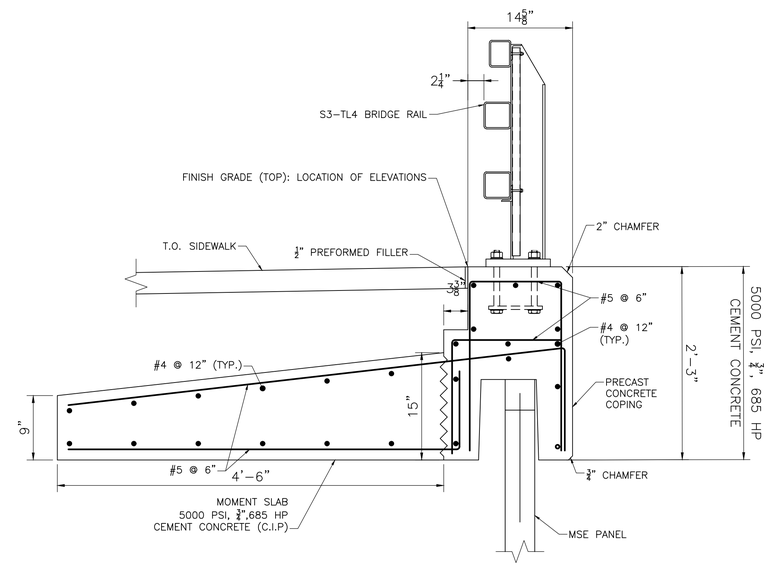

MOMENT SLAB WITH S3-TLB BRIDGE RAIL - SIDEWALK
SCALE: N.T.S.

604996_HD(WALL).DWG Plotted on 3-Aug-2020 10:37 PM

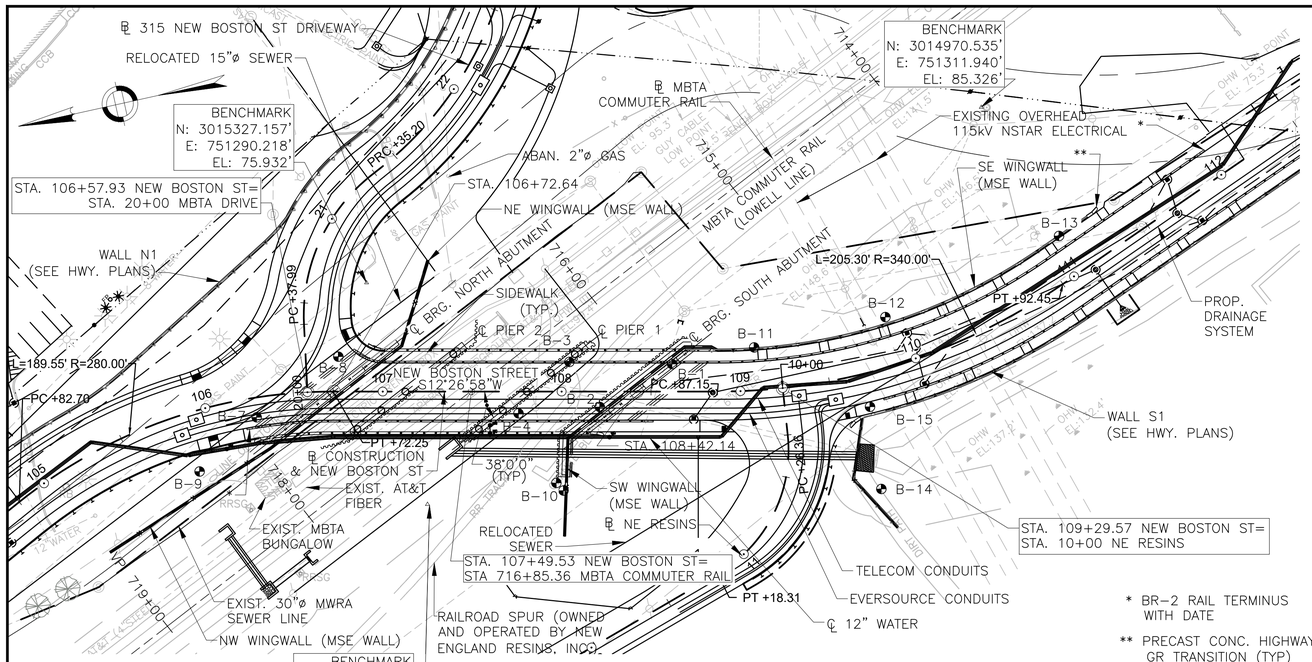

KEY PLAN BRIDGE NO. W–43–017 (BB4)

SCALE: 1" = 40'

* BR–2 RAIL TERMINUS WITH DATE

** PRECAST CONC. HIGHWAY GR TRANSITION (TYP) (HWY ITEM) (SPEC 904.3)

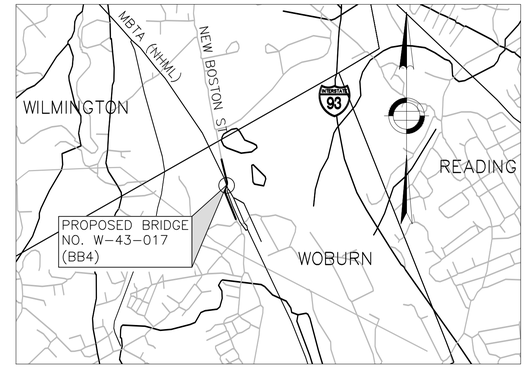

LOCUS

SCALE: 1" = 2000'

WOBURN
NEW BOSTON STREET

STATE	FED. AID PROJ. NO.	SHEET NO.	TOTAL SHEETS
MA	–	82	147
PROJECT FILE NO. 604996			

KEY PLAN, PROFILE, AND INDEX

INDEX:

1	KEY PLAN, PROFILE, AND INDEX
2	GENERAL NOTES
3–8	BORING LOGS
9	GENERAL PLAN AND ELEVATION
10–11	FOUNDATION PLAN
12	FOUNDATION DETAILS
13	NORTH ABUTMENT PLAN AND ELEVATION
14	NORTH ABUTMENT HORIZONTAL SECTION
15–17	NORTH MSE WALL PLAN AND ELEVATION
18	SOUTH ABUTMENT PLAN AND ELEVATION
19	SOUTH ABUTMENT HORIZONTAL SECTION
20–24	SOUTH MSE WALL PLAN AND ELEVATION
25–26	ABUTMENT DETAILS
27	MSE WALL DETAILS
28	PIER 1 PLAN AND ELEVATION
29	PIER 2 PLAN AND ELEVATION
30–31	PIER DETAILS
32	KEEPER BLOCK DETAILS
33	FRAMING PLAN
34	BEAM DETAILS
35–36	STEEL DETAILS
37	BEARING DETAILS
38	TYPICAL SECTION
39–40	DECK DETAILS
41	RAILING PLAN
42	MOMENT SLAB DETAILS
43	BR–2 RAILING
44	ORNAMENTAL RAIL DETAILS
45	BR–2 TERMINUS
46	HIGHWAY GUARDRAIL TRANSITION TOP
47	HIGHWAY GUARDRAIL TRANSITION BOTTOM

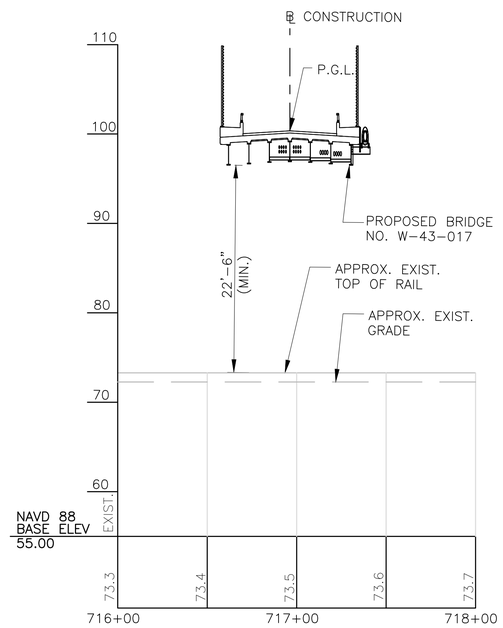

PROFILE ALONG MBTA COMMUTER RAIL

HORIZONTAL SCALE: 1" = 40'
VERTICAL SCALE: 1" = 8'

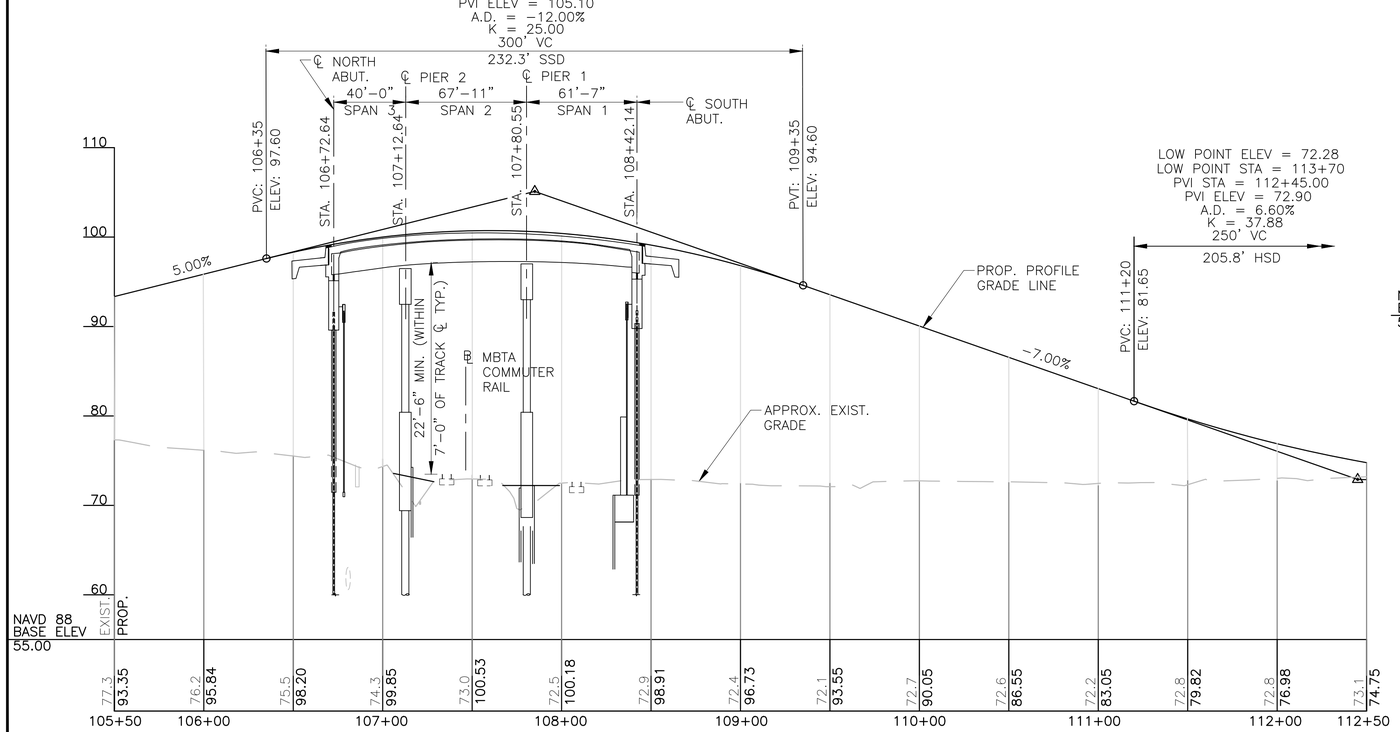

PROFILE – NEW BOSTON STREET OVER MBTA COMMUTER RAIL

HORIZONTAL SCALE: 1" = 40'
VERTICAL SCALE: 1" = 8'

MONTH DD, XXXX | ISSUED FOR CONSTRUCTION

massDOT Massachusetts Department of Transportation Highway Division

PROPOSED BRIDGE

WOBURN

NEW BOSTON STREET
OVER MBTA COMMUTER RAIL

MASSACHUSETTS DEPARTMENT OF TRANSPORTATION
HIGHWAY DIVISION
10 PARK PLAZA BOSTON, MASS

vhb
Vanasse Hangen Brustlin, Inc.
101 Walnut St, P.O. Box 9151
Watertown, MA 02472
617.924.1770 FAX 617.924.2286

TITLE: | CHIEF ENGINEER

PROGRESS PRINT - NOT FOR CONSTRUCTION

\\VHB\GBL\PROJ\WAT-TE\08363.27\CADTE\604996\BR\DWG\604996_BR(KEY_PLAN).DWG
604996_BR(KEY_PLAN).DWG Plotted on 3-Aug-2020 6:01 PM
Second Structural Submittal (S2) 3-August-2020

WOBURN
NEW BOSTON STREET

STATE	FED. AID PROJ. NO.	SHEET NO.	TOTAL SHEETS
MA	–	83	147
PROJECT FILE NO. 604996			

GENERAL NOTES

GENERAL NOTES

DESIGN:

IN ACCORDANCE WITH:

THE 2017 AMERICAN ASSOCIATION OF STATE HIGHWAY AND TRANSPORTATION OFFICIALS LRFD BRIDGE DESIGN SPECIFICATIONS FOR HL-93 LOADING.

THE 2013 MASSACHUSETTS DEPARTMENT OF TRANSPORTATION LRFD BRIDGE MANUAL.

THE 2011 AMERICAN ASSOCIATION OF STATE HIGHWAY AND TRANSPORTATION OFFICIALS GUIDE SPECIFICATIONS FOR LRFD SEISMIC BRIDGE DESIGN.

MASSDOT BENCH MARKS:

N3015327.157', E751209.218', EL. 75.932'
N3014970.535', E751311.940', EL. 85.326'
N3015320.648', E751161.875', EL. 75.692'

ELEVATIONS ARE BASED ON THE NORTH AMERICAN VERTICAL DATUM (NAVD88) OF 1988.

DATE:

TO BE PLACED ON THE INSIDE FACE OF THE SOUTHEAST AND NORTHWEST BR-2 RAIL TERMINUS AS INDICATED ON THE KEY PLAN. A SHEET SHOWING SIZE AND CHARACTER OF NUMERALS WILL BE FURNISHED. THE DATE USED SHALL BE THE YEAR THE BRIDGE IS SCHEDULED TO BE OPENED TO TRAFFIC. ALL LOCATIONS SHALL FEATURE THE SAME DATE.

SURVEY NOTEBOOK:

SURVEY PERFORMED BY HANCOCK ASSOCIATES BETWEEN THE DATES OF JANUARY 2019 AND MAY 2019 FROM HIGHWAY PLANS.

FOUNDATIONS:

FOUNDATIONS MAY BE ALTERED, IF NECESSARY, TO SUIT CONDITIONS ENCOUNTERED DURING CONSTRUCTION, WITH THE APPROVAL OF THE ENGINEER.

UNSUITABLE MATERIAL:

UNSUITABLE MATERIAL SHALL BE REMOVED WITHIN THE LIMITS OF THE FOUNDATIONS OF THE STRUCTURE, AS DIRECTED BY THE ENGINEER.

SEISMIC GROUND SHAKING HAZARD:

DESIGN RETURN PERIOD: 1000 YEARS

DESIGN SPECTRA:

As = 0.129g
Sds = 0.258g
Sd1 = 0.097g

SITE CLASS = D

SEISMIC DESIGN CATEGORY (SDC) = A

GEOTECHNICAL REPORT:

REFER TO GEOTECHNICAL REPORT, DATED AUGUST 2020, PREPARED BY LGCI, INC.

REINFORCEMENT:

REINFORCING STEEL SHALL CONFORM TO THE REQUIREMENTS OF AASHTO M31 GRADE 60. UNLESS OTHERWISE NOTED ON THE CONSTRUCTION DRAWINGS, ALL BARS SHALL BE LAPPED AS FOLLOWS:

MODIFICATION CONDITION	#4 BARS	#5 BARS
1. NONE	21"	26"
2. 12" OF CONCRETE BELOW BAR	29"	36"
3. COATED BARS, COVER <3d_b, OR CLEAR SPACING <6d_b	31"	39"
4. COATED BARS, ALL OTHER CASES	25"	31"
5. CONDITION 2, AND 3	35"	44"
6. CONDITION 2, AND 4	34"	43"

IF THE ABOVE BARS ARE SPACED 6 INCHES OR MORE ON CENTER, THE LAP LENGTH SHALL BE 80% OF THE LAP LENGTH GIVEN ABOVE. ALL OTHER BARS SHALL BE LAPPED AS SHOWN ON THE CONSTRUCTION DRAWINGS.

REINFORCING STEEL PLACED AT THE FOLLOWING LOCATIONS SHALL BE EPOXY COATED: HIGHWAY GUARDRAIL TRANSITIONS, DECK, SIDEWALKS, SUBSTRUCTURE BACKWALLS, BEAM SEATS AND PIER CAPS, AND MSE WALL COPINGS.

CONSTRUCTION REQUIREMENTS AND PROCEDURES:

THE CONTRACTOR SHALL TAKE THE PROPER PRECAUTIONS TO ENSURE THE STABILITY AND SAFE PERFORMANCE OF ALL STRUCTURAL ELEMENTS DURING DEMOLITION AND CONSTRUCTION. REFER TO APPROVED DEMOLITION/ERECTION PLANS

EXISTING CONDITIONS:

THE CONTRACTOR SHALL DETERMINE AND ESTABLISH ALL DIMENSIONS AND DETAILS NECESSARY FOR COMPLETION OF ALL WORK BY FIELD MEASUREMENTS AND SURVEY. THE CONTRACTOR SHALL BE RESPONSIBLE FOR THE ADEQUACY AND ACCURACY THEREOF, AND SHALL NOT ORDER ANY MATERIAL OR COMMENCE ANY FABRICATION UNTIL HE HAS MADE THE REQUIRED MEASUREMENTS AND THE EXTENT OF THE PROPOSED WORK HAS BEEN APPROVED BY THE ENGINEER.

CONSTRUCTION JOINTS:

CONSTRUCTION JOINTS, OTHER THAN THOSE SHOWN ON THE PLANS, WILL NOT BE PERMITTED WITHOUT THE APPROVAL OF THE ENGINEER.

SCALES:

SCALES NOTED ON THE PLANS ARE NOT APPLICABLE TO REDUCED SIZE PRINTS. DIVIDE SCALES BY 2 FOR HALF-SIZE PRINTS.

ANCHOR BOLTS:

ALL ANCHOR BOLTS SHALL BE SET BY TEMPLATE BEFORE THE CONCRETE IS PLACED, EXCEPT AT ABUTMENTS WHERE CORING AND GROUTING MAY BE USED AT THE CONTRACTOR'S OPTION, PROVIDED THAT THE METHOD OF INSTALLATION WILL NOT CUT REINFORCING STEEL.

CONCRETE:

THE WORK UNDER THESE HEADINGS SHALL CONFORM TO THE APPLICABLE PROVISIONS OF SECTION 901 OF THE STANDARD SPECIFICATIONS WITH THE FOLLOWING ADDITIONS.

THE FOLLOWING CONCRETE MIXES ARE TO BE USED:

ABUTMENTS BELOW BRIDGE SEAT CONSTRUCTION JOINT, PIERS, APPROACH SLABS, CRASH WALL, AND ABUTMENT PEDESTALS SHALL BE 4000 PSI – ¾" – 610 CEMENT CONCRETE UNLESS NOTED OTHERWISE.

DRILLED SHAFTS SHALL BE 4000 PSI – ⅜" – 660 CEMENT CONCRETE.

ABUTMENTS ABOVE BRIDGE SEAT CONSTRUCTION JOINT AND DECK SLABS SHALL BE 4000 PSI – ¾" – 585 HP CEMENT CONCRETE.

SIDEWALKS SHALL BE 5000 PSI – ¾" 685 HP CEMENT CONCRETE.

STRUCTURAL STEEL:

ALL STRUCTURAL STEEL SHALL BE AASHTO M270 GRADE 50W.

ALL UNPAINTED WEATHERING STEEL WITHIN 12" OF THE ABUTMENT FACE SHALL BE PAINTED. THE FINISH COAT COLOR SHALL MATCH COLOR CHIP NO. 30045 OF FEDERAL STANDARD 595B.

SECTION MARK:

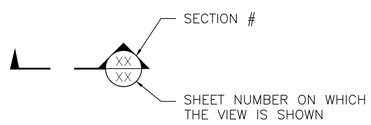

ESTIMATED BRIDGE QUANTITES
(NOT GUARANTEED)

DESCRIPTION	QUANTITY	UNIT
BRIDGE EXCAVATION	500	CY
CLASS B ROCK EXCAVATION	50	CY
GRAVEL BORROW FOR BRIDGE FOUNDATIONS	800	CY
PEASTONE FOR INTEGRAL ABUTMENTS	80	TON
CONTROLLED DENSITY FILL	5	CY
CRUSHED STONE FOR BRIDGE FOUNDATIONS	290	TON
SUPERPAVE BRIDGE SURFACE COURSE	50	TON
SUPERPAVE BRIDGE PROTECTIVE COURSE	70	TON
48 IN CLF	230	FT
48 IN CLF END POST	6	EA
4000 PSI, ¾ IN, 610 CEMENT CONCRETE	180	CY
5000 PSI, ¾ IN, 685 HP CEMENT CONCRETE	320	CY
STEEL REINFORCEMENT FOR STRUCTURES – EPOXY COATED	71400	LB
STEEL PILE HP 12 X 84	640	FT
DRILLED SHAFT EXCAVATION 4.0 FOOT DIAMETER	290	FT
ROCK SOCKET EXCAVATION 3.5 FOOT DIAMETER	80	FT
DRILLED SHAFT 4.0 FOOT DIAMETER	320	FT
CROSS HOLE SONIC TESTING ACCESS PIPES	1260	FT
CROSS HOLE SONIC TEST	10	EA
TEST PILE	48	FT
QUICK LOAD TEST	1	EA
DYNAMIC LOAD TEST BY CONTRACTOR	2	EA
PILE SHOES	15	EA
GROUND IMPROVEMENT	1	LS
TEMP. SHORING – BRIDGE NO. W-43-017	1	LS
METAL BRIDGE RAILING, STEEL (TYPE BR-2)	750	FT
9 FT ORNAMENTAL PEDESTRIAN RAILING W/ CLF	370	FT
34 IN STEEL PEDESTRIAN RAILING WITH HAND RAILS	300	FT
42 IN STEEL PROTECTIVE PEDESTRIAN RAILING WITH HAND RAILS	245	FT
CONTROL OF WATER – STRUCTURE NO. W-43-017	1	LS
MECHANICALLY STABILIZED EARTH WALL (BRIDGE ONLY)	1460	SY
BRIDGE STRUCTURE – BRIDGE NO. W-43-017	1	LS

DATE	DESCRIPTION
MONTH DD, YYYY	ISSUED FOR CONSTRUCTION
USE ONLY PRINTS OF LATEST DATE	

PROGRESS PRINT - NOT FOR CONSTRUCTION

\\FHBIGBL\PROJ\WAT-TE\08363.27\CAD\TE604996\BR\DWG\604996_BR(GEN_NOTES).DWG
604996_BR(GEN_NOTES).DWG Plotted on 3-Aug-2020 5:38 PM
Second Structural Submittal (S2) 3-August-2020

WOBURN
NEW BOSTON STREET

STATE	FED. AID PROJ. NO.	SHEET NO.	TOTAL SHEETS
MA	–	84	147
PROJECT FILE NO. 604996			

BORING LOGS
(1 OF 6)

BORING B–1
STATION: 108+61.64
OFFSET: 15.36' LEFT

LGCI
Lahlaf Geotechnical Consulting, Inc.

BORING LOG

Boring B-1
Page 1

Project:	**Proposed New Boston Street Bridge over MBTA Tracks, Woburn, MA**		
Client:	**Vanasse Hangen Brustlin, Inc.**		LGCI Project No.: 1014
Drilling Subcontractor:	New Hampshire Boring	Date Started:	8/31/2011
Drilling Foreman:	Peter Labosiere	Date Completed:	9/1/2011
LGCI Engineer:	Geetha Mathiyalakan	Location:	Proposed Southern Abutment
Ground Surface El:	72.89 feet (see remark 1)	Total Depth:	35 ft
Groundwater Depth:	6 ft at the end of drilling	Drill Rig Type:	Mobile B-47 - Truck Mounted
		Drilling Method:	4-in casing / Tricone roller bit
Hammer Weight:	140 lbs	Split Spoon Diameter:	ID - 1.375", OD - 2"
Hammer Type:	Safety	Rock Core Barrel Size:	NX Diamond Core Bit
Drop:	30 inches		

BOT. OF CRASH WALL (SOUTH ABUT.) EL. 67.00

GROUNDWATER EL. 66.9

ESTIMATED BOT. OF PILE (SOUTH ABUT.) EL. 43.3

Depth Scale	Sample Depth (ft)	Sample No	Blows per 6 inches 0-6	6-12	12-18	18-24	Pen (in)	Rec (in)	Remarks	Strata	Sample Description
	0 - 2	S1	10	13	8	6	24	14		Fill	S1 - Top 6": Silty SAND with Gravel (SM), mostly fine to medium, ~10% coarse, ~20% fines, ~25% fine to coarse gravel, dark brown, moist (fill)
	2 - 4	S2	9	8	8	5	24	10		2.5' Silty Sand & Peat (Swamp Dep.)	Bot. 8": Silty SAND (SM), fine to medium, trace coarse, ~20% fines, trace coarse gravel, traces of thin (~1/8") seams of peat, brown, moist (fill) S2 - Similar to Bot. 8" of S1, dark brown to brown, moist (appears fill)
5ft	4 - 6	S3	3	3	2	1	24	22			S3 - Silty SAND (SM) with thin seams of Peat, fine to medium sand, ~20% fines, interbedded thin (~1/8") seams of fibrous peat, up to 1" thick seam of peat near the bottom, dark gray, wet
	6 - 8	S4	4	8	13	14	24	16		9.3' Sand and Gravel	S4 - Top 6": Similar to Bot. 20" of S3, trace of coarse gravel, dark black, wet Bot. 10": Poorly Graded SAND with Silt (SP-SM), fine to medium, 10-15% fines, traces of thin (~1/8") seams of peat, light gray to tan, moist
10ft	9 - 11	S5	23	17	58	32	24	11			S5 - Top 4": Poorly Graded SAND with Silt and Gravel (SP-SM), fine to medium, ~10% fines, ~30% coarse subangular gravel, traces of peat, tan with traces of dark brown, wet
15ft	14 - 16	S6	13	22	22	40	24	10			Bot. 7": Silty SAND (SM), mostly fine, trace medium, ~20% fines, thin (~1") layer of angular fine gravel near the tip, tan with occasional bright brown layers, wet S6 - Silty SAND with Gravel (SM), fine to coarse, ~ 25% fines, ~ 35% fine to coarse gravel, traces of weathered rock fragments near the tip, gray to tan, wet
20ft	19 - 21	S7	9	22	20	98	24	5			S7 - Similar to S6, tan to gray, wet
	24 - 26	S8	14	11	11	13	24	5			S8 - Silty SAND with Gravel (SM), fine to coarse, ~20% fines, ~20% fine to coarse gravel, gray, wet
30 ft	29 - 30.2	S9	21	20	100/2"		14	7		Sand and Gravel	S9 - Silty SAND with Gravel (SM), fine to coarse, ~25% fines, slight trace of plastic fines, ~25% fine to coarse gravel with thin (~1/2") layer of fine gravel near the top, gray, wet
	30 - 35	C1					60	57		Sound Bedrock	C1 - Minutes per foot: 10, 8, 7, 7, 9 Hard, moderately weathered, moderately to slightly fractured, medium to coarse grained, occasional very coarse grained, white and light gray with thin (~1") seams of pink, DIORITE, close, fairly smooth, moderately dipping joints REC = 95%, RQD = 68%
35 ft											End of boring at 35 ft. Backfilled with drill cuttings.
40 ft											
45 ft											
50 ft											

Remarks:
1. Ground surface elevation taken from a survey plan provided to LGCI by the City of Woburn in e-mail dated 09/16/2011.

BORING B–2
STATION: 108+21.25
OFFSET: 8.63' RIGHT

LGCI
Lahlaf Geotechnical Consulting, Inc.

BORING LOG

Boring B-2
Page 1

Project:	**Proposed New Boston Street Bridge over MBTA Tracks, Woburn, MA**		
Client:	**Vanasse Hangen Brustlin, Inc.**		LGCI Project No.: 1014
Drilling Subcontractor:	New Hampshire Boring	Date Started:	8/29/2011
Drilling Foreman:	Peter Labosiere	Date Completed:	8/30/2011
LGCI Engineer:	A. M. Lahlaf/G. Mathiyalakan	Location:	Southern Abutment
Ground Surface El:	72.93 feet (see remark 1)	Total Depth:	39 feet
Groundwater Depth:	4 feet during drilling	Drill Rig Type:	Mobile B-47 - Truck Mounted
		Drilling Method:	2 1/4" HSA and 4-inch casing
Hammer Weight:	140 lbs	Split Spoon Diameter:	ID - 1.375", OD - 2"
Hammer Type:	Safety	Rock Core Barrel Size:	N/A
Drop:	30 inches		

BOT. OF CRASH WALL (SOUTH ABUT.) EL. 67.00

GROUNDWATER EL. 68.9

ESTIMATED BOT. OF PILE (SOUTH ABUT.) EL. 43.3

Depth Scale	Sample Depth (ft)	Sample No	Blows per 6 inches 0-6	6-12	12-18	18-24	Pen (in)	Rec (in)	Remarks	Strata	Sample Description
	0 - 2	S1	5	6	6	10	24	7		Fill	S1 - Topsoil (crushed stone at the top)
	2 - 4	S2	9	9	6	4	24	16		2.5' Swamp Deposits	S2 - Silty SAND (SM), fine to medium, ~ 20% fines, organic soil and roots near bottom, dark brown, moist (fill)
5ft	4 - 6	S3	5	4	13	53	24	8		6.5' Sand and Gravel	S3 - Organic Soil (OL) with soft peat, dark brown, wet
	6 - 8	S4	24	22	28	52	24	16			S4 - Top 8": Poorly Graded SAND (SP), medium, traces of organics, brown to gray, wet Bot. 8": Poorly Graded SAND (SP), medium, gray, wet (top 8" traces of organics)
10ft	9 - 11	S5	6	7	19	32	24	12			S5 - Similar to S4, not organics, trace of fine sand, ~ 10% fines near the bottom of the sample, stone at tip of spoon
15ft	15 - 17	S6	32	15	30	45	27	7			S6 - Silty SAND with Gravel (SM), fine to medium, trace coarse, ~ 15% fines, ~ 30% fine angular gravel, gray, wet
20ft	19 - 21	S7	37	37	33	27	24	8			S7 - Well Graded Gravel with Silt and Sand (GM), fine, angular, ~ 15% fines, ~ 40% fine to coarse sand, dark gray, wet
	24 - 26	S8	14	11	17	18	24	0			S8 - No recovery - Stone at tip of spoon
	29 -	S8	50/0"				0	0		Sand and Gravel ~29' Weath. Bedrock to Sound Bedrock	
30 ft	29 - 33	C1					48	48	2)		C1 - Minutes per foot: 7, 5, 8, 15 Hard, moderately weathered, moderately to slightly fractured, medium to coarse grained, light gray with white banding, DIORITE, close, fairly smooth, moderately dipping joints REC = 100%, RQD = 46%
	33 - 35	C2					24	21			C2 - Minutes per foot: 9, 7 Hard, moderately weathered, slightly fractured to sound, coarse grained, light gray with traces of white, DIORITE, close, fairly smooth, moderately dipping joints REC = 87.5%, RQD = 87.5%
35 ft	35 - 39	C3					48	48	2)		C3 - Minutes per foot: 5, 5, 6, 6 Hard, moderately weathered, slightly fractured, coarse grained, white and light gray, DIORITE, close, fairly smooth, moderately dipping to nearly vertical joints REC = 100%, RQD = 62%
40 ft											End of boring at 39 ft. Backfilled with drill cuttings.
45 ft											
50 ft											

Remarks:
1. Ground surface elevation taken from a survey plan provided to LGCI by the City of Woburn in e-mail dated 09/16/2011.

NOTES:

1. LOCATION OF BORINGS SHOWN ON THE PLAN THUS:
2. BORINGS ARE TAKEN FOR PURPOSE OF DESIGN AND SHOW CONDITIONS AT BORING POINT ONLY, BUT DO NOT NECESSARILY SHOW THE NATURE OF THE MATERIALS TO BE ENCOUNTERED DURING CONSTRUCTION.
3. WATER LEVELS SHOWN ON THE BORING LOGS WERE OBSERVED AT THE TIME OF TAKING BORINGS AND DO NOT NECESSARILY SHOW THE TRUE GROUND WATER LEVEL.
4. FIGURES IN COLUMNS INDICATE NUMBER OF BLOWS REQUIRED TO DRIVE A 1 3/8" I.D. SPLIT SPOON SAMPLER 6" USING A 140 POUND WEIGHT FALLING 30".
5. ALL BORINGS WERE MADE IN AUGUST AND SEPTEMBER OF 2011.
6. BORINGS WERE MADE BY NEW HAMPSHIRE BORING, INC., P.O. BOX 165, DERRY, NH 03038.
7. THE NORTH AMERICAN VERTICAL DATUM (NAVD) OF 1988 IS USED THROUGHOUT.

MONTH DD, YYYY	ISSUED FOR CONSTRUCTION
DATE	DESCRIPTION
USE ONLY PRINTS OF LATEST DATE	

SHEET 03 OF 47 SHEETS BRIDGE NO. W–43–017 (BB4)

PROGRESS PRINT - NOT FOR CONSTRUCTION

\\VHB\GBL\PROJ\WAT-TE\08363.27\CAD\TE\604996\BR\DWG\604996_BR(BORING_LOGS).DWG
604996_BR(BORING_LOGS).DWG Plotted on 2-Aug-2020 10:37 PM
Second Structural Submittal (S2) 3-August-2020

WOBURN
NEW BOSTON STREET

STATE	FED. AID PROJ. NO.	SHEET NO.	TOTAL SHEETS
MA	–	85	147

PROJECT FILE NO. 604996

BORING LOGS
(2 OF 6)

BORING B–3
STATION: 108+4.26
OFFSET: 16.57' LEFT

GROUNDWATER EL. 68.1

BOT. OF PIER 1 CRASH WALL EL. 68.00

ESTIMATED BOT. OF SHAFT (PIER 1) EL. 45.2

ESTIMATED BOT. OF ROCK SOCKET (PIER 1) EL. 37.2

LGCI Lahlaf Geotechnical Consulting, Inc.

BORING LOG — **Boring B-3** **Page 1**

Project:	Proposed New Boston Street Bridge over MBTA Tracks, Woburn, MA		
Client:	Vanasse Hangen Brustlin, Inc.		LGCI Project No.: 1014
Drilling Subcontractor:	New Hampshire Boring	Date Started:	8/31/2011
Drilling Foreman:	Peter Labosiere	Date Completed:	8/31/2011
LGCI Engineer:	Geetha Mathiyalakan	Location:	Proposed Southern Pier
Ground Surface El:	72.06 feet (see remark 1)	Total Depth:	39.5 ft
Groundwater Depth:	4 ft at the end of drilling	Drill Rig Type:	Mobile B-47 - Truck Mounted
		Drilling Method:	4-in casing / Tricone roller bit
Hammer Weight:	140 lbs	Split Spoon Diameter:	ID - 1.375", OD - 2"
Hammer Type:	Safety	Rock Core Barrel Size:	NX Diamond Core Bit
Drop:	30 inches		

Depth Scale	Sample Depth (ft)	Sample No	Blows per 6 inches 0-6	6-12	12-18	18-24	Pen (in)	Rec (in)	Remarks	Strata	Sample Description
	0 - 2	S1	8	11	10	6	24	9		Fill ~2'	S1 - Top 3": Coarse angular gravel Bot. 6": Silty SAND with Gravel (SM), fine to coarse, ~25% fines, ~20% fine gravel, traces of thin (~1/8") seams of peat in bottom 4 inches, dark brown to black, moist (fill)
	2 - 4	S2	10	5	5	9	24	13		Silty Sand & Peat (Swamp Dep.) ~9'	S2 - Silty SAND (SM), fine to medium (fine at the bottom), ~15% fines, trace of fine to coarse gravel at the top, traces of thin (~1/8") seams of fibrous peat in top 7 inches, brown to tan, moist
5ft	4 - 6	S3	10	13	28	35	24	12			S3 - Poorly Graded SAND with Silt (SP-SM), fine to medium (fine at the bottom), 10-15% fines, trace of coarse gravel, traces of peat in top 3 inches, light tan to tan, wet
	6 - 8	S4	22	26	27	31	24	22			S4 - Similar to S3, traces of organics in top 10 inches, tan to dark brown, wet
10ft	9 - 11	S5	18	26	51	37	24	7		Sand and Gravel	S5 - Silty SAND (SM), mostly fine, ~20% fines, trace of coarse gravel, trace of weathered rock fragments at the tip, slight trace of organics at the very top of the sample, tan with dark brown layers, wet
15ft	14 - 16	S6	28	36	29	22	24	10			S6 - Well Graded SAND with Silt and Gravel (SW-SM), mostly fine to medium, ~10% coarse, 10-15% fines, ~35% fine to coarse gravel, tan to brown, wet
20ft	19 - 21	S7	52	18	40	33	24	5			S7 - Similar to S6
	24 - 26	S8	32	43	32	37	24	5			S8 - Top 2": Similar to S6 Bot. 3": Silty SAND with Gravel (SM), fine to coarse, ~25% fines, ~25% fine gravel, brown to gray, wet
30 ft	29 - 29.8	S9	17	100/3"			9	3		Sand and Gravel	S9 - Silty SAND with Gravel (SM), mostly fine to medium, ~15% coarse, ~30% fines, slight trace of plastic fines, ~25% fine to coarse gravel, brown to gray, wet
	30 - 35	C1					60	60		Weath. Bedrock	C1 - Minutes per foot: 7, 5, 5, 7, 6 Hard, moderately weathered, moderately to slightly fractured, medium to coarse grained, white and light gray with thin (~1/2" to 3") seams of pink to white, DIORITE, close, fairly smooth to rough, low angle to moderately dipping joints REC = 100%, RQD = 43%
35 ft	35 - 39.5	C2					54	40	2)		C2 - Minutes per foot: 7, 14, 12, 23, 20 (6 inches) Hard, moderately weathered, moderately to slightly fractured, thin (~5") seam of extremely fractured in the middle, medium to coarse grained, white and light gray banding with thin (~2" to 5") seams of white, DIORITE, close, rough, moderately dipping joints REC = 74%, RQD = 37%
40 ft											End of boring at 39.5 ft. Backfilled with drill cuttings.
45 ft											
50 ft											

Remarks:
1. Ground surface elevation taken from a survey plan provided to LGCI by the City of Woburn in e-mail dated 09/16/2011.

BORING B–4
STATION: 107+75.90
OFFSET: 12.21' RIGHT

GROUNDWATER EL. 68.3

BOT. OF PIER 1 CRASH WALL EL. 68.00

ESTIMATED BOT. OF SHAFT (PIER 1) EL. 45.2

ESTIMATED BOT. OF ROCK SOCKETS (PIER 1) EL. 37.2

LGCI Lahlaf Geotechnical Consulting, Inc.

BORING LOG — **Boring B-4** **Page 1**

Project:	Proposed New Boston Street Bridge over MBTA Tracks, Woburn, MA		
Client:	Vanasse Hangen Brustlin, Inc.		LGCI Project No.: 1014
Drilling Subcontractor:	New Hampshire Boring	Date Started:	8/30/2011
Drilling Foreman:	Peter Labosiere	Date Completed:	8/30/2011
LGCI Engineer:	Geetha Mathiyalakan	Location:	Proposed Southern Pier
Ground Surface El:	71.25 feet (see remark 1)	Total Depth:	28 ft
Groundwater Depth:	3 ft at the end of drilling	Drill Rig Type:	Mobile B-47 - Truck Mounted
		Drilling Method:	4-in casing / Tricone roller bit
Hammer Weight:	140 lbs	Split Spoon Diameter:	ID - 1.375", OD - 2"
Hammer Type:	Safety	Rock Core Barrel Size:	NX Diamond Core Bit
Drop:	30 inches		

Depth Scale	Sample Depth (ft)	Sample No	Blows per 6 inches 0-6	6-12	12-18	18-24	Pen (in)	Rec (in)	Remarks	Strata	Sample Description
	0 - 2	S1	2	1	5	8	24	7		Fill ~2.5'	S1 - Top 3": Coarse angular gravel (fill) Bot. 6": Silty SAND (SM), fine to medium, trace coarse near bottom, ~25% fines, trace fine gravel, traces of thin (~1/16") seams of peat near the bottom 2 inches, brown to black, moist (fill)
	2 - 4	S2	10	3	4	6	24	18		Silty Sand & Peat (Swamp Dep.) ~5.5'	S2 - Top 3": Fine to coarse angular gravel (fill) Bot. 15": Poorly Graded SAND with Silt (SP-SM), fine to medium, 10-15% fines, traces of organics, dark brown to black, moist to wet at the tip
5ft	4 - 6	S3	11	22	25	51	24	12			S3 - Similar to bot 15" of S2, occasional traces of thin (~1/16") seams of peat and organics, tan with thin brown layers, wet
	6 - 6.4	S4	100/5"				5	5			S4 - Poorly Graded SAND with Silt (SP-SM), mostly fine, 10-15% fines, trace of angular coarse gravel near the tip, slight traces of fibrous peat, tan, wet
	7 - 9	S5	7	16	18	20	24	13			S5 - Top 6": Similar to S4, organic soil, no peat
10ft	9 - 11	S6	7	11	13	17	24	14		Sand and Gravel	Bot. 7": Poorly Graded SAND with Silt (SP-SM), fine to medium, 10-15% fines, tan to brown, wet S6 - Silty SAND (SM), mostly fine to trace of thin (1/4") layers of medium near bottom, 15% fines, tan with occasional brown layers, wet
15ft	14 - 16	S7	8	17	24	27	24	10			S7 - Well Graded SAND with Silt and Gravel (SW-SM), mostly fine to medium, ~10% coarse, 10-15% fines, ~30% fine gravel, tan to brown, wet
20ft	19 - 20.4	S8	28	18	100/5"		17	5	2)	~23'	S8 - Similar to S7, trace of weathered rock fragments near the tip, tan to brown, trace of thin (~1/4") layer of gray silty fine sand near the tip, wet
	23 - 28	C1					60	60		Weath. Bedrock	C1 - Minutes per foot: 9, 8, 11, 14, 18 Hard, moderately weathered, slightly to moderately fractured, coarse to medium to coarse grained below, white and light gray with thin (~1/2") seams of white near the bottom, DIORITE, close, fairly smooth, moderately dipping to high angle joints REC = 100%, RQD = 50%
30 ft											End of boring at 28 ft. Backfilled with drill cuttings.
35 ft											
40 ft											
45 ft											
50 ft											

Remarks:
1. Ground surface elevation taken from a survey plan provided to LGCI by the City of Woburn in e-mail dated 09/16/2011.
2- Based on drilling action possible cobbles and or boulder between 20 and 21 feet.

NOTES:
1. FOR BORING NOTES SEE SHEET 03 OF 47.

MONTH DD, YYYY	ISSUED FOR CONSTRUCTION
DATE	DESCRIPTION
USE ONLY PRINTS OF LATEST DATE	

SHEET 04 OF 47 SHEETS BRIDGE NO. W–43–017 (BB4)

PROGRESS PRINT - NOT FOR CONSTRUCTION

\\VHB\GBL\PROJ\WAT-TE\98363.27\CAD\TE\604996\BR\DWG\604996_BR(BORING_LOGS).DWG
604996_BR(BORING_LOGS).DWG Plotted on 2-Aug-2020 7:57 PM
Second Structural Submittal (S2) 3-August-2020

BORING LOGS (3 OF 6)

NOTES:

1. FOR BORING NOTES SEE SHEET 03 OF 47.

BORING B–7

STATION: 106+27.56
OFFSET: 10.97' RIGHT

GROUNDWATER EL. 70.6

ESTIMATED BOT. OF PILE (NORTH ABUT.) EL. 48.0

LGCI Labfaf Geotechnical Consulting, Inc.

BORING LOG — Boring B-7, Page 1

Project:	Proposed New Boston Street Bridge over MBTA Tracks, Woburn, MA		
Client:	Vanasse Hangen Brustlin, Inc.		LGCI Project No.: 1014
Drilling Subcontractor:	New Hampshire Boring	Date Started:	9/6/2011
Drilling Foreman:	Peter Labosiere	Date Completed:	9/6/2011
LGCI Engineer:	Geetha Mathiyalakan	Location:	Proposed Northern Abutment
Ground Surface El:	75.6 feet (see remark 1)	Total Depth:	30 ft
Groundwater Depth:	5 ft at the end of drilling	Drill Rig Type:	Mobile B-47 - Truck Mounted
		Drilling Method:	4-in casing / Tricone roller bit
Hammer Weight:	140 lbs	Split Spoon Diameter:	ID - 1.375", OD - 2"
Hammer Type:	Safety	Rock Core Barrel Size:	NX Diamond Core Bit
Drop:	30 inches		

Depth Scale	Sample Depth (ft)	Sample No	Blows per 6 inches 0-6	6-12	12-18	18-24	Pen (in)	Rec (in)	Remarks	Strata	Sample Description
										Asph. 0.5	~6 inches of Asphalt
	0.5 - 2.5	S1	17	15	18	11	24	6		Silty Sand & Peat (Swamp Dep.)	S1 - Silty SAND with Gravel (SM), mostly fine to medium, trace coarse, ~20% fines, ~20% fine gravel, traces of organics, traces of peat near the tip, black to dark brown, wet (fill)
	2.5 - 4.5	S2	9	6	6	6	24	15			S2 - Top 4": Silty SAND (SM) with thin seams of Peat, mostly fine, trace medium, ~20% fines, trace fine gravel, thin (~1/8") seams of peat, gray to dark brown, wet Bot. 11": Silty SAND (SM), mostly fine, ~20% fines, traces of organics near the tip, dark brown to brown, wet
5ft	4 - 6	S3	5	6	10	13	24	13			S3 - Poorly Graded SAND with Silt (SP-SM), fine to medium, 10-15% fines, traces of organics in top 6 inches, tan to brown, wet
	6 - 8	S4	16	22	19	20	24	24			S4 - Top 8": Similar to S3, traces of thin (1/8") seams of coarse, tan to dark brown, wet Bot. 16": Silty SAND (SM), fine to medium, ~20% fines, tan to brown, wet
10ft	9 - 11	S5	13	17	23	25	24	16		~9.2'	S5 - Similar to bot. 16" of S4, ~25% fines, slight traces of organics and small roots in top 3 inches
15ft	14 - 16	S6	13	13	15	15	24	18		Sand and Gravel	S6 - Top 5": Similar to S5, trace of coarse sand, tan to brown, wet Bot. 13": Silty SAND (SM), fine to very fine, ~30% fines, tan to brown, wet
20ft	19 - 21	S7	33	34	34	25	24	10			S7 - Well Graded SAND with Silt and Gravel (SM), mostly fine to medium, 10-15% fines, ~30% fine to coarse gravel, brown to gray, wet
										~24' Weath. Bedrock	(Based on drilling action estimated top of bedrock at 24 ft)
	25 - 30	C1					60	60		Sound Bedrock	C1 - Minutes per foot: 8, 8, 9, 8, 9 Hard, moderately weathered, moderately to slightly fractured, thin (~1/2") seams of extremely fractured near the top and bottom, medium to coarse grained, light gray with frequent thin (~1/2") seams of white, DIORITE, close, fairly smooth, moderately dipping to high angle joints REC = 100%, RQD = 65%
30 ft											End of boring at 30 ft. Backfilled with drill cuttings and cold asphalt patch at the top.
35 ft											
40 ft											
45 ft											
50 ft											

Remarks:
1. Ground surface elevation taken from a survey plan provided to LGCI by the City of Woburn in e-mail dated 09/16/2011.
2- Based on drilling action possible cobbles at 17.5 ft and 23 ft.

BORING B–8

STATION: 106+75.81
OFFSET: 19.50' LEFT

GROUNDWATER EL. 68.4

ESTIMATED BOT. OF PILE (NORTH ABUT.) EL. 48.0

LGCI Labfaf Geotechnical Consulting, Inc.

BORING LOG — Boring B-8, Page

Project:	Proposed New Boston Street Bridge over MBTA Tracks, Woburn, MA		
Client:	Vanasse Hangen Brustlin, Inc.		LGCI Project No.: 1014
Drilling Subcontractor:	New Hampshire Boring	Date Started:	9/2/2011
Drilling Foreman:	Peter Labosiere	Date Completed:	9/2/2011
LGCI Engineer:	Geetha Mathiyalakan	Location:	Proposed Northern Abutment
Ground Surface El:	75.42 feet (see remark 1)	Total Depth:	41 ft
Groundwater Depth:	7 ft at the end of drilling	Drill Rig Type:	Mobile B-47 - Truck Mounted
		Drilling Method:	4-in casing / Tricone roller bit
Hammer Weight:	140 lbs	Split Spoon Diameter:	ID - 1.375", OD - 2"
Hammer Type:	Safety	Rock Core Barrel Size:	NX Diamond Core Bit
Drop:	30 inches		

Depth Scale	Sample Depth (ft)	Sample No	Blows per 6 inches 0-6	6-12	12-18	18-24	Pen (in)	Rec (in)	Remarks	Strata	Sample Description
										Asph. 0.5	~6 inches of Asphalt
	0.6 - 2.6	S1	10	8	6	4	24	15		Silty Sand & Peat (Swamp Dep.)	S1 - Top 7": Silty SAND (SM), mostly fine to medium, ~30% fines, trace of fine to coarse gravel, traces of organics, black, moist (fill)
	2.6 - 4.6	S2	4	5	7	6	24	14			Bot. 8": Poorly Graded SAND with Silt (SP-SM), fine to medium, 10-15% fines, thin seams of Peat, ~2" thick seam of peat at the tip, brown to dark brown, moist S2 - Poorly Graded SAND with Silt (SP-SM), fine to medium, 10-15% fines, traces of organics at the top 2 inches, orange brown to brown, moist
5ft	4 - 6	S3	6	11	11	19	24	13			S3 - Similar to S2, brown, wet
	6 - 8	S4	27	34	24	25	24	15			S4 - Top 7": Silty SAND (SM), mostly fine, ~20% fines, trace of coarse gravel, traces of organics, brown to dark brown, wet Bot. 8": Silty SAND (SM), mostly fine, trace medium, ~20% fines, brown, wet
10ft	9 - 11	S5	9	14	17	19	24	13			S5 - Similar to Bot. 8" of S4, light tan, wet
15ft	14 - 16	S6	7	6	6	9	24	9		Sand	S6 - Poorly Graded SAND with Silt (SP-SM), mostly fine, ~10% medium, 10-15% fines, tan to brown, wet
20ft	19 - 21	S7	2	2	3	5	24	13			S7 - Top 6": Similar to S6, tan, wet Bot. 7": Silty SAND (SM), fine with thin (~1/8") layers of medium, ~20% fines, tan to brown, wet
	24 - 26	S8	5	3	3	30	24	20			S8 - Top 17": Silty SAND (SM), fine to medium to fine below, 20-25% fines, tan to brown, wet Bot. 3": Weathered fine gravel rock fragments
30 ft	29 - 29.7	S9	26	100/2"			8	4		Sand and Gravel	S9 - Silty SAND with Gravel (SM), mostly fine to medium, ~15% coarse, ~20% fines, ~30% fine to coarse gravel, brown to gray, wet
	31 - 36	C1					60	56		Weath. Bedrock	(Based on drilling, estimated top of bedrock at 30 ft) C1 - Minutes per foot: 8, 6, 7, 7, 11 Hard, moderately weathered, moderately to slightly fractured, thin (~1") seams of extremely fractured near the top and middle, medium to coarse grained, occasional thin (~1") seams of pink and white coarse grained, light gray, DIORITE, close, fairly smooth, low angle to moderately dipping joints REC = 93%, RQD = 50%
35 ft	36 - 41	C2					60	60			C2 - Minutes per foot: 4, 8, 8, 10, 7 Hard, moderately weathered, moderately to slightly fractured, medium to coarse grained, light gray with occasional thin (~1") seams of pink and white, DIORITE, close, fairly smooth, low angle to moderately dipping joints, traces of thin (~1/32") seams of clay along joints REC = 100%, RQD = 38%
40 ft											End of boring at 41 ft. Backfilled with drill cuttings and cold asphalt patch at the top.
45 ft											
50 ft											

Remarks:
1. Ground surface elevation taken from a survey plan provided to LGCI by the City of Woburn in e-mail dated 09/16/2011.

MONTH DD, YYYY	ISSUED FOR CONSTRUCTION
DATE	DESCRIPTION
USE ONLY PRINTS OF LATEST DATE	

PROGRESS PRINT - NOT FOR CONSTRUCTION

\\WHBGBL\PROJ\WAT-TE\08363.27\CAD\TE\604996\BR\DWG\604996_BR(BORING_LOGS).DWG

604996_BR(BORING_LOGS).DWG Plotted on 2-Aug-2020 7:57 PM

Second Structural Submittal (S2) 3-August-2020

BORING B–9

STATION: 105+83.07
OFFSET: 33.42' RIGHT

LGCI Lahlaf Geotechnical Consulting, Inc.

BORING LOG — **Boring B-9** **Page 1 of 1**

Project: **Proposed New Boston Street Bridge over MBTA Tracks, Woburn, MA**
Client: **Vanasse Hangen Brustlin, Inc.** LGCI Project No.: 1014

Drilling Subcontractor:	New Hampshire Boring	Date Started:	9/6/2011
Drilling Foreman:	Peter Labosiere	Date Completed:	9/6/2011
LGCI Engineer:	Geetha Mathiyalakan	Location:	Proposed northern retaining wall
Ground Surface El:	~ 75.7 feet (see remark 1)	Total Depth:	14.5 ft
Groundwater Depth:	2 ft at the end of drilling	Drill Rig Type:	Mobile B-47 - Truck Mounted
		Drilling Method:	4-in casing / Tricone roller bit
Hammer Weight:	140 lbs	Split Spoon Diameter:	ID - 1.375", OD - 2"
Hammer Type:	Safety	Rock Core Barrel Size:	NA
Drop:	30 inches		

GROUNDWATER EL. 73.7

Depth Scale	Depth (ft)	Sample No	Blows per 6 inches 0-6	6-12	12-18	18-24	Pen (in)	Rec (in)	Remarks	Strata	Sample Description
	0.5 - 2.5	S1	15	16	14	7	24	10		Fill	~5 inches of Asphalt S1 - Silty SAND with Gravel (SM), fine to coarse, ~20% fines, ~25% fine gravel, traces of organics, trace of fine to medium sand with peat near the tip, dark brown to brown, moist (fill)
	2.5 - 4.5	S2	7	6	7	7	24	15		Silty Sand & Peat (Swamp Dep.)	S2 - Silty SAND (SM), mostly fine, ~20 - 25% fines, thin to ~1/4" seams of peat, dark brown, wet
5ft	4 - 6	S3	5	13	21	27	24	16			S3 - Top 6": Similar to S2, ~20% fines, thin (~1/16") seams of peat Bot. 10": Poorly Graded SAND with Silt (SP-SM), fine to medium, 10-15% fines, brown, wet
	6 - 8	S4	14	20	25	33	24	20			S4 - Similar to S2, medium near bottom, 20% fines, (~1/16") seams of organics
10ft	9 - 11	S5	18	24	27	26	24	17		~9.2' Sand and Gravel	S5 - Silty SAND (SM), mostly fine, ~15% medium, ~25-30% fines, slight traces of organics and small roots in top 3 inches, tan to brown, wet
15ft									2)	Possible Boulder	
20ft											End of boring at 14.5 ft. Backfilled with drill cuttings and cold asphalt patch at the top.

Remarks:
1. Approx. ground surface El. interpolated from spot elev. taken from survey plan provided to LGCI by the City of Woburn in e-mail dated 09/16/11.
2- Based on drilling action possible boulder or weathered bedrock at 12.5 ft, and roller bit 2 ft into it and end of boring at 14.5 ft.

BORING B–10

STATION: 108+1.01
OFFSET: 53.38' RIGHT

LGCI Lahlaf Geotechnical Consulting, Inc.

BORING LOG — **Boring B-10** **Page 1 of 1**

Project: **Proposed New Boston Street Bridge over MBTA Tracks, Woburn, MA**
Client: **Vanasse Hangen Brustlin, Inc.** LGCI Project No.: 1014

Drilling Subcontractor:	New Hampshire Boring	Date Started:	8/29/2011
Drilling Foreman:	Peter Labosiere	Date Completed:	8/29/2011
LGCI Engineer:	A. M. Lahlaf	Location:	Retaining wall west of S. abutment
Ground Surface El:	~ 72.7 feet (see remark 1)	Total Depth:	20 feet
Groundwater Depth:	~ 4 feet during drilling	Drill Rig Type:	Mobile B-47 - Truck Mounted
		Drilling Method:	2 1/4" HSA
Hammer Weight:	140 lbs	Split Spoon Diameter:	ID - 1.375", OD - 2"
Hammer Type:	Safety	Rock Core Barrel Size:	N/A
Drop:	30 inches		

GROUNDWATER EL. 68.7

Depth Scale	Depth (ft)	Sample No	Blows per 6 inches 0-6	6-12	12-18	18-24	Pen (in)	Rec (in)	Remarks	Strata	Sample Description
	0 - 2	S1	5	20	37	15	24	12		Fill	S1 - Topsoil (gravel at tip of spoon)
	2 - 4	S2	12	9	8	21	24	6	2	~4.5' Swamp Deposits	S2 - Silty SAND with Gravel (SM), fine to medium, ~ 25% fines, ~ 20% fine gravel, traces of organics, traces of asphalt, dark brown, moist, wet near bottom (fill)
5ft	4 - 6	S3	3	8	2	8	24	2			S3 - Piece of gravel at tip of spoon
	6 - 8	S4	10	9	8	21	24	12		8.0' Sand and Gravel	S4 - SILT with Sand (ML), ~ 4 inches of peat near middle of sample (swamp deposit)
10ft	8 - 10	S5	20	30	34	42	24	16			S5 - Silty SAND with Gravel (SM) fine to coarse, ~ 15% fines, ~ 15% fine gravel, gray, wet
	10 - 12	S6	41	40	26	40	24	8			S6 - Silty Gravel with Sand (GM), ~ 15% fines, ~ 35% fine to coarse sand, dark gray, wet Hard drilling from 11.5 to 13 feet and from 14 to 15 feet.
15ft	15 - 17	S6	33	30	26	26	24	11			S7 - Similar to S6
20ft											Augered to 20 feet. Could not sample due to bottom blow in. End of borings at 20 feet. Backfilled with drill cuttings.

Remarks:
1. Approx. ground surface El. interpolated from spot elev. taken from survey plan provided to LGCI by the City of Woburn in e-mail dated 09/16/11.
2 - Little drill cuttings in top 4 feet indicating loose fill. Based on drilling action soil may contain cobbles and boulders.

NOTES:

1. FOR BORING NOTES SEE SHEET 03 OF 47.

WOBURN
NEW BOSTON STREET

STATE	FED. AID PROJ. NO.	SHEET NO.	TOTAL SHEETS
MA	–	88	147

PROJECT FILE NO. 604996

BORING LOGS (5 OF 6)

NOTES:

1. FOR BORING NOTES SEE SHEET 03 OF 47.

BORING B–11

STATION: 109+9.17
OFFSET: 23.99' LEFT

GROUNDWATER EL. 69.9

LGCI Lahlaf Geotechnical Consulting, Inc. — BORING LOG — Boring B-11, Page 1 of 1

Project: **Proposed New Boston Street Bridge over MBTA Tracks, Woburn, MA**
Client: **Vanasse Hangen Brustlin, Inc.** — LGCI Project No.: 1014

Drilling Subcontractor:	New Hampshire Boring	Date Started:	9/1/2011
Drilling Foreman:	Peter Labosiere	Date Completed:	9/1/2011
LGCI Engineer:	Geetha Mathiyalakan	Location:	Proposed southern retaining wall
Ground Surface El:	~ 71.9 feet (see remark 1)	Total Depth:	21 ft
Groundwater Depth:	2 ft at the end of drilling	Drill Rig Type:	Mobile B-47 - Truck Mounted
		Drilling Method:	4-in casing / Tricone roller bit
Hammer Weight:	140 lbs	Split Spoon Diameter:	ID - 1.375", OD - 2"
Hammer Type:	Safety	Rock Core Barrel Size:	NA
Drop:	30 inches		

Depth Scale	Sample Depth (ft)	Sample No	Blows per 6 inches 0-6	6-12	12-18	18-24	Pen (in)	Rec (in)	Remarks	Strata	Sample Description
	0 - 2	S1	16	27	11	7	24	14		Fill	S1 - Top 2": Fine to coarse angular gravel Mid. 6": Silty SAND (SM), fine to medium, ~20% fines, trace of fine to coarse gravel, traces of thin (~1/8") seams of peat, dark brown to brown, moist (appears fill)
	2 - 4	S2	8	9	7	6	24	5		Silty Sand & Peat (Swamp Dep.)	Bot. 6": Silty SAND (SM) with thin seams of Peat, fine to medium, ~25% fines, trace of fine to coarse gravel, thin (~1/8") seams of peat, dark brown to black, moist
5ft	4 - 6	S3	3	1	2	13	24	16			S2 - Fibrous Peat, black, moist S3 - Similar to bot. 6" of S1, ~20% fines, thin (~1/8" to 3") seams of peat, tan to dark brown, wet
	6 - 8	S4	22	26	55	100/4"	22	22			S4 - Silty SAND (SM), mostly fine, 10 - 25% fines, traces of organics, thin (~1/8") seams of peat near the top, dark brown to gray, wet
10ft	9 - 9.8	S5	28	100/4"			10	4	2)	~9.1' Sand and Gravel	S5 - Silty SAND with Gravel (SM), mostly fine, ~20% fines, trace of coarse gravel, traces of peat in top 1", tan with brown layers, wet
15ft	14 - 16	S6	23	20	41	23	24	9			S6 - Silty SAND with Gravel (SM), mostly fine to medium, ~10% coarse, ~20% fines, ~30% fine to coarse gravel, traces of weathered rock fragments at the tip, gray to brown, wet
20ft	19 - 21	S7	23	18	12	8	24	5	2)		S7 - Similar to S6, ~25% fine to coarse gravel at the top to ~15% fine gravel below, brown to gray, wet
											End of boring at 21 ft. Backfilled with drill cuttings.

Remarks:
1. Approx. ground surface El. interpolated from spot elev. taken from survey plan provided to LGCI by the City of Woburn in e-mail dated 09/16/11.
2- Based on drilling action possible cobbles at 10 ft and 18 ft.

BORING B–12

STATION: 109+90.74
OFFSET: 27.21' LEFT

GROUNDWATER & EL. 68.7

LGCI Lahlaf Geotechnical Consulting, Inc. — BORING LOG — Boring B-12, Page 1 of 1

Project: **Proposed New Boston Street Bridge over MBTA Tracks, Woburn, MA**
Client: **Vanasse Hangen Brustlin, Inc.** — LGCI Project No.: 1014

Drilling Subcontractor:	New Hampshire Boring	Date Started:	9/7/2011
Drilling Foreman:	Peter Labosiere	Date Completed:	9/7/2011
LGCI Engineer:	Geetha Mathiyalakan	Location:	Proposed southern retaining wall
Ground Surface El:	~ 71.5 feet (see remark 1)	Total Depth:	24.2 ft
Groundwater Depth:	4 ft at the end of drilling	Drill Rig Type:	Mobile B-47 - Truck Mounted
		Drilling Method:	4-in casing / Tricone roller bit
Hammer Weight:	140 lbs	Split Spoon Diameter:	ID - 1.375", OD - 2"
Hammer Type:	Safety	Rock Core Barrel Size:	NA
Drop:	30 inches		

Depth Scale	Sample Depth (ft)	Sample No	Blows per 6 inches 0-6	6-12	12-18	18-24	Pen (in)	Rec (in)	Remarks	Strata	Sample Description
	0 - 2	S1	31	18	7	3	24	12		Fill	S1 - Top 2": Topsoil Bot. 10": Silty SAND with Gravel (SM), mostly fine to medium, 20-25% fines, 20-25% fine gravel, slight traces of organics near the tip, gray, wet (fill)
	2 - 4	S2	2	7	8	5	24	12		Silty Sand & Peat (Swamp Dep.)	S2 - Silty SAND with Gravel (SM), mostly fine to medium, 25-30% fines, ~15% fine gravel, traces of thin (~1/16") seams of peat in top 6 inches, dark brown to gray, wet
5ft	4 - 6	S3	5	4	2	3	24	10			S3 - Fibrous Peat with thin (~1/8") seams of fine sand near the tip, dark brown, wet
	6 - 8	S4	7	16	17	26	24	9			S4 - Silty SAND (SM) with Organics, mostly fine, ~15% medium, 25-30% fines, trace of coarse gravel, little organics, dark gray, wet
10ft	9 - 11	S5	6	6	7	31	24	13		~9.3' Sand and Gravel	S5 - Top 4": Silty SAND (SM) with thin seams of Organics, mostly very fine, ~25% fines, thin (~1/8") seams of organics, gray, wet Bot. 9": Silty SAND (SM), very fine, trace of medium, ~25% fines, trace of coarse gravel near the top and tip, gray with thin brown layers, wet
15ft	14 - 16	S6	30	29	25	25	24	12			S6 - Silty SAND with Gravel (SM), mostly fine to medium, ~30% fines, slight trace of plastic fines, 35-40% fine to coarse gravel, gray with thin brown layers, wet
20ft	19 - 21	S7	43	37	71	100/3"	21	7	2)	~23.8'	S7 - Similar to S6, ~25% fine to coarse gravel, traces of weathered rock fragments near the tip, brown to gray, wet
											End of boring at 24.2 ft. Backfilled with drill cuttings.

Remarks:
1. Approx. ground surface El. interpolated from spot elev. taken from survey plan provided to LGCI by the City of Woburn in e-mail dated 09/16/11.
2- Based on drilling action possible boulder or weathered bedrock at 23.8 ft. Advanced roller bit 5 inches into it and end of boring at 24.2 ft.

BORING B–13

STATION: 111+6.73
OFFSET: 23.06' LEFT

GROUNDWATER EL. 67.7

LGCI Lahlaf Geotechnical Consulting, Inc. — BORING LOG — Boring B-13, Page 1 of 1

Project: **Proposed New Boston Street Bridge over MBTA Tracks, Woburn, MA**
Client: **Vanasse Hangen Brustlin, Inc.** — LGCI Project No.: 1014

Drilling Subcontractor:	New Hampshire Boring	Date Started:	9/7/2011
Drilling Foreman:	Peter Labosiere	Date Completed:	9/7/2011
LGCI Engineer:	Geetha Mathiyalakan	Location:	Proposed southern retaining wall
Ground Surface El:	~ 72.2 feet (see remark 1)	Total Depth:	20 ft
Groundwater Depth:	4.5 ft at the end of drilling	Drill Rig Type:	Mobile B-47 - Truck Mounted
		Drilling Method:	4-in casing / Tricone roller bit
Hammer Weight:	140 lbs	Split Spoon Diameter:	ID - 1.375", OD - 2"
Hammer Type:	Safety	Rock Core Barrel Size:	NA
Drop:	30 inches		

Depth Scale	Sample Depth (ft)	Sample No	Blows per 6 inches 0-6	6-12	12-18	18-24	Pen (in)	Rec (in)	Remarks	Strata	Sample Description
	0.5 - 2.5	S1	15	17	15	15	24	13		Fill ~1.5'	~5 inches of Asphalt S1 - Silty SAND with Gravel (SM), mostly fine to medium, ~25% fines, 25-30% fine to coarse gravel, traces of thin (~1/8") seams of peat at the tip, dark brown to gray, wet (fill)
	2.5 - 4.5	S2	7	6	5	4	24	14		Silty Sand & Peat (Swamp Dep.)	S2 - Top 7": Silty SAND (SM) with thin seams of Peat, mostly fine, ~20% fines, thin (~1/4") seams of fibrous peat, dark brown, moist
5ft	4 - 6	S3	5	5	6	8	24	12			Bot. 7": Silty SAND (SM), mostly fine, trace medium, 15-20% fines, traces of organics, bright brown, moist S3 - Top 6": Silty SAND (SM), fine to medium, 15-20% fines, traces of thin (~1/16") seams of peat, dark brown to brown, wet
	6 - 8	S4	8	15	18	15	24	19			Bot. 6": Silty SAND (SM), mostly fine, trace medium, ~20-25% fines, gray, wet
10ft	9 - 11	S5	45	35	43	44	24	12		~9.2' Band and Gravel	S4 - Silty SAND (SM), fine to medium at the top to fine below, 15-20% fines, trace of fine gravel at the top, slight traces of organics in top 6 inches, tan to gray, wet S5 - Top 2": Similar to S4
15ft	14 - 14.4	S6	100/5"				5	0	2)		Bot. 10": Silty SAND with Gravel (SM), mostly fine to medium, 20-25% fines, slight trace of plastic fines, ~35% mostly coarse subangular gravel, brown to gray, wet S6 - No Recovery
20ft	19 - 20	S7	43	100/6"			12	4			
											End of boring at 20 ft. Backfilled with drill cuttings and cold asphalt patch at the top.

Remarks:
1. Approx. ground surface El. interpolated from spot elev. taken from survey plan provided to LGCI by the City of Woburn in e-mail dated 09/16/11.
2- Based on drilling action possible cobbles at 13 ft and 16 ft.

MONTH DD, YYYY	ISSUED FOR CONSTRUCTION
DATE	DESCRIPTION
USE ONLY PRINTS OF LATEST DATE	

SHEET 07 OF 47 SHEETS BRIDGE NO. W–43–017 (BB4)

PROGRESS PRINT - NOT FOR CONSTRUCTION

\\VHB\GBL\PROJ\WAT-TE\08363.27\CAD\TE604996\BR\DWG\604996_BR(BORING_LOGS).DWG
604996_BR(BORING_LOGS).DWG Plotted on 2-Aug-2020 7:57 PM
Second Structural Submittal (S2) 3-August-2020

WOBURN
NEW BOSTON STREET

STATE	FED. AID PROJ. NO.	SHEET NO.	TOTAL SHEETS
MA	–	89	147

PROJECT FILE NO. 604996

BORING LOGS (6 OF 6)

BORING B–14

STATION: 109+64.69
OFFSET: 64.95' RIGHT

GROUNDWATER EL. 67.6

LGCI Lahlaf Geotechnical Consulting, Inc.

BORING LOG — **Boring B-14** Page 1 of 1

Project:	**Proposed New Boston Street Bridge over MBTA Tracks, Woburn, MA**		
Client:	**Vanasse Hangen Brustlin, Inc.**		LGCI Project No.: 1014
Drilling Subcontractor:	New Hampshire Boring	Date Started:	9/1/2011
Drilling Foreman:	Peter Labosiere	Date Completed:	9/2/2011
LGCI Engineer:	Geetha Mathiyalakan	Location:	Proposed southern retaining wall
Ground Surface El:	~ 72.1 feet (see remark 1)	Total Depth:	21 ft
Groundwater Depth:	4.5 ft at the end of drilling	Drill Rig Type:	Mobile B-47 - Truck Mounted
		Drilling Method:	4-in casing / Tricone roller bit
Hammer Weight:	140 lbs	Split Spoon Diameter:	ID - 1.375", OD - 2"
Hammer Type:	Safety	Rock Core Barrel Size:	NA
Drop:	30 inches		

Depth Scale	Sample Depth (ft)	Sample No	Blows per 6 inches 0-6	6-12	12-18	18-24	Pen (in)	Rec (in)	Remarks	Strata	Sample Description
	0 - 2	S1	10	23	41	27	24	10		Fill	S1 - Top 4": Topsoil Bot. 6": Silty SAND with Gravel (SM), mostly fine to medium, ~20% fines, thin (2") layer of fine to coarse angular gravel at the bottom, traces of organics, dark brown, moist (fill)
	2 - 4	S2	27	7	8	8	24	1		~5' (est.) Silty Sand & Peat (Swamp Dep.)	S2 - Trace of sample similar to Bot. 6" of S1 (fill) S3 - Fibrous Peat, trace of angular coarse gravel at the top, dark black, wet S4 - Top 4": Silty SAND (SM), fine to coarse, ~20% fines, traces of peat, dark black, wet Bot. 3": Silty SAND (SM), mostly fine, ~25% fines, slight traces of peat, gray, wet
5ft	4 - 6	S3	54	4	2	1	24	4			
	6 - 8	S4	1	2	14	16	24	7		~9.4'	
10ft	9 - 11	S5	11	16	18	17	24	14		Sand and Gravel	S5 - Silty SAND (SM), mostly fine, ~20% fines, slight traces of organics in top 5 inches, gray, wet
15ft	14 - 16	S6	20	35	24	25	24	8			S6 - Well Graded SAND with Silt and Gravel (SW-SM), mostly fine to medium, 10-15% fines, 35-40% fine to coarse gravel, gray, wet
20ft	19 - 21	S7	24	22	17	18	24	9			S7 - Top 7": Similar to S6, 40-45% fine to coarse gravel, brown to gray, wet Bot. 2": Silty SAND with Gravel (SM), fine to medium, ~20% fines, 30-35% fine to coarse gravel, gray, wet
											End of boring at 21 ft. Backfilled with drill cuttings.

Remarks:
1. Approx. ground surface El. interpolated from spot elev. taken from survey plan provided to LGCI by the City of Woburn in e-mail dated 09/16/11.

BORING B–15

STATION: 109+68.46
OFFSET: 18.85' RIGHT

GROUNDWATER EL. 67.8

LGCI Lahlaf Geotechnical Consulting, Inc.

BORING LOG — **Boring B-15** Page 1 of 1

Project:	**Proposed New Boston Street Bridge over MBTA Tracks, Woburn, MA**		
Client:	**Vanasse Hangen Brustlin, Inc.**		LGCI Project No.: 1014
Drilling Subcontractor:	New Hampshire Boring	Date Started:	9/7/2011
Drilling Foreman:	Peter Labosiere	Date Completed:	9/7/2011
LGCI Engineer:	Geetha Mathiyalakan	Location:	Proposed southern retaining wall
Ground Surface El:	~ 72.8 feet (see remark 1)	Total Depth:	21 ft
Groundwater Depth:	5 ft at the end of drilling	Drill Rig Type:	Mobile B-47 - Truck Mounted
		Drilling Method:	4-in casing / Tricone roller bit
Hammer Weight:	140 lbs	Split Spoon Diameter:	ID - 1.375", OD - 2"
Hammer Type:	Safety	Rock Core Barrel Size:	NA
Drop:	30 inches		

Depth Scale	Sample Depth (ft)	Sample No	Blows per 6 inches 0-6	6-12	12-18	18-24	Pen (in)	Rec (in)	Remarks	Strata	Sample Description
	0.5 - 2.5	S1	30	28	12	12	24	13		Fill ~1'	~6 inches of Asphalt S1 - Silty SAND with Gravel (SM), mostly fine to medium, ~25% fines, 25-30% fine to coarse gravel at the top to ~20% fine gravel below, traces of thin (~1/2" to 1/8") seams of peat , gray to brown, wet
	2.5 - 4.5	S2	9	9	7	27	24	15		Silty Sand & Peat (Swamp Dep.)	S2 - Silty SAND with Gravel (SM), mostly fine to medium, 25-30% fines, 15-20% fine gravel, traces of thin (~1/8") seams of peat in bottom 6 inches, brown to gray, wet S3 - Silty SAND with Gravel (SM), mostly fine to medium, ~25% fines, 25-30% fine gravel, slight traces of organics, brown to gray, wet S4 - Silty SAND with Gravel (SM), mostly fine to medium, ~10% coarse, 20-25% fines, 25-30% fine to coarse gravel, thin (1/8") seam of peat and silty sand at the tip, gray to brown, wet
5ft	4 - 6	S3	13	28	17	16	24	5			
	6 - 8	S4	9	16	20	32	24	6			
10ft	9 - 11	S5	9	14	17	22	24	14		Sand and Gravel	S5 - Silty SAND (SM), fine to medium at the top to fine below, 20-25% fines, slight traces of organics at the very top, gray to tan, wet
15ft	14 - 16	S6	16	16	20	42	24	12			S6 - Silty SAND with Gravel (SM), mostly fine to medium, ~20% fines, 15-20% fine gravel, trace of coarse gravel at the tip, gray to brown, wet
20ft	19 - 21	S7	23	50	80	43	24	6			S7 - Silty SAND with Gravel (SM), mostly fine to medium, ~20% fines, 35-40% fine to coarse gravel, brown to gray, wet
											End of boring at 22 ft. Backfilled with drill cuttings and cold asphalt patch at the top.

Remarks:
1. Approx. ground surface El. interpolated from spot elev. taken from survey plan provided to LGCI by the City of Woburn in e-mail dated 09/16/11.

NOTES:

1. FOR BORING NOTES SEE SHEET 03 OF 47.

DATE	DESCRIPTION
MONTH DD, YYYY	ISSUED FOR CONSTRUCTION

USE ONLY PRINTS OF LATEST DATE

PROGRESS PRINT - NOT FOR CONSTRUCTION

\\FHB\GBL\PROJ\WAT-TE\08363.27\CAD\TE\604996\BR\DWG\604996_BR(BORING_LOGS).DWG

604996_BR(BORING_LOGS).DWG Plotted on 2-Aug-2020 7:58 PM

Second Structural Submittal (S2) 3-August-2020

WOBURN
NEW BOSTON STREET

STATE	FED. AID PROJ. NO.	SHEET NO.	TOTAL SHEETS
MA	–	90	147
PROJECT FILE NO. 604996			

GENERAL PLAN AND ELEVATION

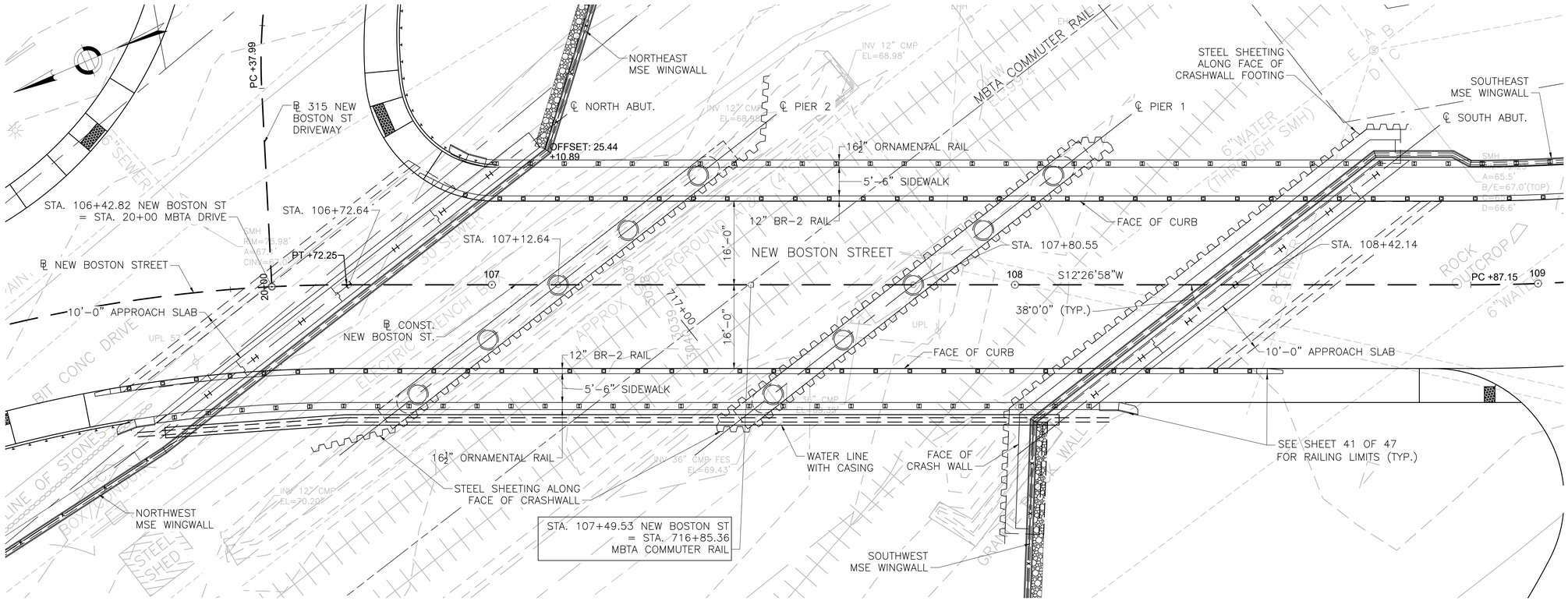

GENERAL PLAN
SCALE: $\frac{3}{32}$" = 1'–0"

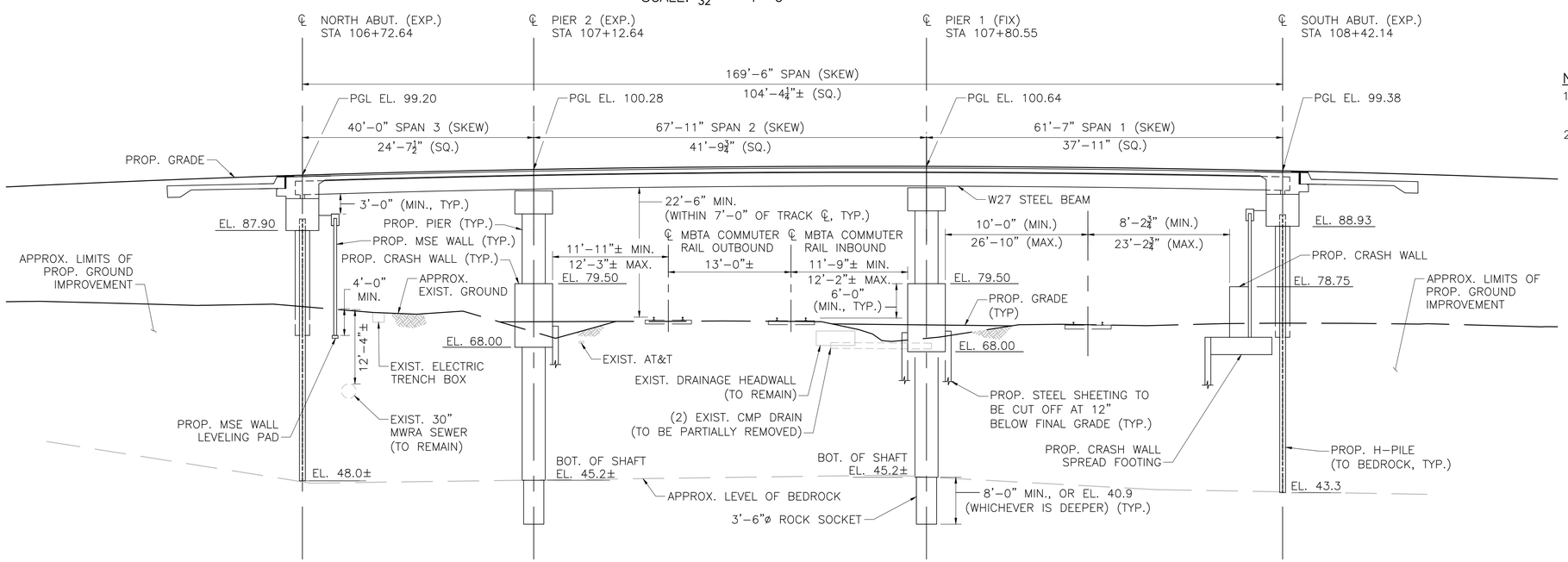

ELEVATION
SCALE: $\frac{3}{32}$" = 1'–0"

NOTES:

1. SEE RAILING PLAN, SHEET 41 OF 47, FOR RAILING POST AND PARAFFIN JOINT SPACINGS.
2. HORIZONTAL DIMENSIONS ARE SQUARE DIMENSIONS UNLESS NOTED OTHERWISE.

DATE	DESCRIPTION
MONTH DD, YYYY	ISSUED FOR CONSTRUCTION
USE ONLY PRINTS OF LATEST DATE	

SHEET 09 OF 47 SHEETS BRIDGE NO. W–43–017 (BB4)

PROGRESS PRINT - NOT FOR CONSTRUCTION

\\WHBGBL\PROJ\WAT-TE\08363.27\CAD\TE604996\BR\DWG\604996_BR(GEN_PLAN).DWG

604996_BR(GEN_PLAN).DWG Plotted on 3-Aug-2020 1:23 PM

Second Structural Submittal (S2) 3-August-2020

WOBURN
NEW BOSTON STREET

STATE	FED. AID PROJ. NO.	SHEET NO.	TOTAL SHEETS
MA	–	91	147
PROJECT FILE NO. 604996			

FOUNDATION PLAN
(1 OF 2)

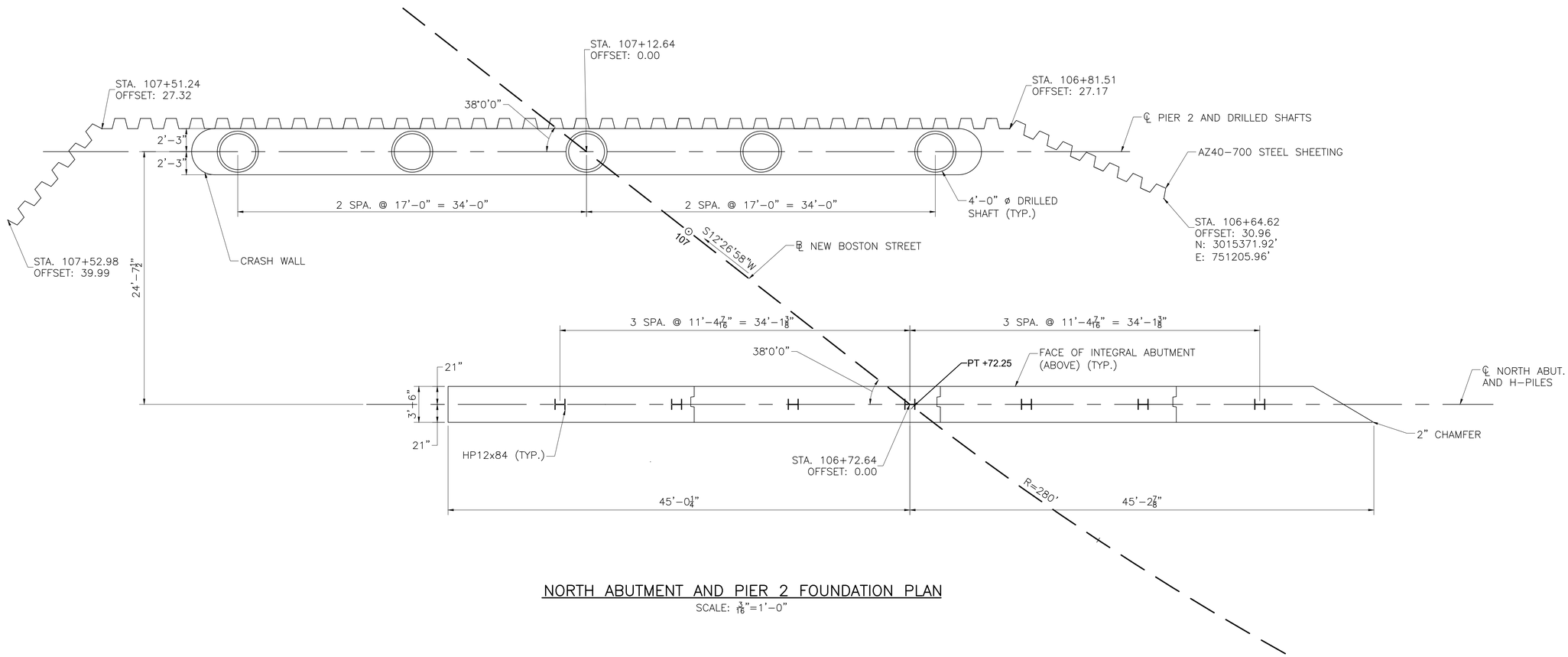

NORTH ABUTMENT AND PIER 2 FOUNDATION PLAN
SCALE: 3/16"=1'-0"

MONTH DD, YYYY	ISSUED FOR CONSTRUCTION
DATE	DESCRIPTION
USE ONLY PRINTS OF LATEST DATE	

SHEET 10 OF 47 SHEETS BRIDGE NO. W-43-017 (BB4)

PROGRESS PRINT - NOT FOR CONSTRUCTION

\\VHB\GBL\PROJ\WAT-TE\08363.27\CAD\TE604996\BR\DWG\604996_BR(FDN_PLAN).DWG

604996_BR(FDN_PLAN).DWG Plotted on 2-Aug-2020 7:59 PM

Second Structural Submittal (S2) 3-August-2020

WOBURN
NEW BOSTON STREET

STATE	FED. AID PROJ. NO.	SHEET NO.	TOTAL SHEETS
MA	–	92	147
PROJECT FILE NO. 604996			

FOUNDATION PLAN (2 OF 2)

CRASH WALL FOOTING GEOMETRY		
W.P.	STATION	OFFSET
W.P. 1	108+67.19	29.73' LT.
W.P. 2	108+73.70	29.73' LT.
W.P. 3	108+69.43	23.23' LT.
W.P. 4	108+73.70	23.23' LT.
W.P. 5	107+98.93	23.60' RT.
W.P. 6	107+98.09	47.52' RT.
W.P. 7	108+05.32	26.86' RT.
W.P. 8	108+04.37	47.46' RT.

NOTE:
BOTTOM OF CRASH WALL FOOTING IS AT EL. 67.00.

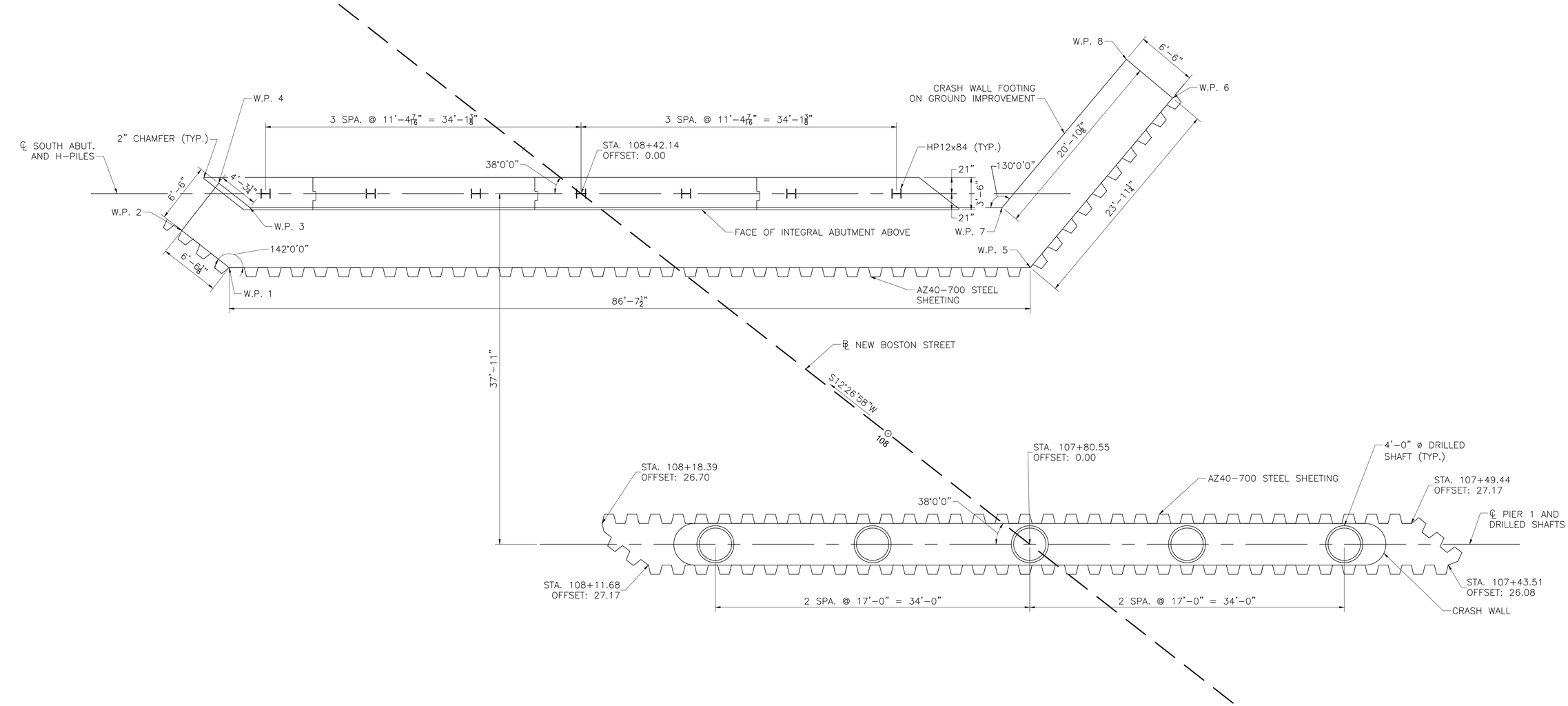

SOUTH ABUTMENT AND PIER 1 FOUNDATION PLAN

SCALE: 3/16"=1'-0"

MONTH DD, YYYY	ISSUED FOR CONSTRUCTION
DATE	DESCRIPTION
USE ONLY PRINTS OF LATEST DATE	

SHEET 11 OF 47 SHEETS BRIDGE NO. W-43-017 (BB4)

PROGRESS PRINT - NOT FOR CONSTRUCTION

\\FHB\GBL\PROJ\WAT-TE\08363.27\CAD\TE\604996\BR\DWG\604996_BR(FDN_PLAN).DWG

604996_BR(FDN_PLAN).DWG Plotted on 2-Aug-2020 7:59 PM

Second Structural Submittal (S2) 3-August-2020

WOBURN
NEW BOSTON STREET

STATE	FED. AID PROJ. NO.	SHEET NO.	TOTAL SHEETS
MA	–	93	147
PROJECT FILE NO. 604996			

FOUNDATION DETAILS

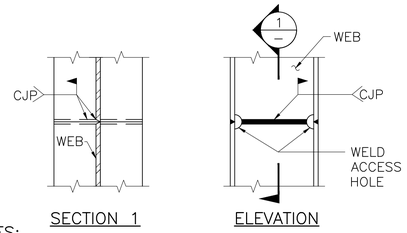

NOTES:

1. ALL WELDS SHALL BE COMPLETE PENETRATION AND SHALL CONFORM TO THE ANSI/AASHTO/AWS BRIDGE WELDING CODE, D1.5.
2. WELDING PROCEDURE SPECIFICATIONS MUST BE APPROVED BY THE ENGINEER PRIOR TO WELDING.
3. WHENEVER POSSIBLE ALL PILES SHALL BE SPLICED ON THE GROUND IN THE FLAT POSITION.
4. WEB SHALL BE COPED TO ALLOW FOR COMPLETE PENETRATION WELDING OF FLANGES.
5. WELDED MECHANICAL PILE SPLICERS MAY BE USED PROVIDED THAT COMPLETE DETAILS AND WELDING PROCEDURES HAVE BEEN REVIEWED AND APPROVED BY THE ENGINEER.
6. ALL WELDS SHALL BE INSPECTED USING ULTRASONIC TESTING IN ACCORDANCE WITH THE BRIDGE WELDING CODE, ANSI/AASHTO/AWS D1.5. TECHNICIANS PERFORMING THE TESTING SHALL HAVE PASSED THE PRACTICAL EXAM ADMINISTERED BY THE NEW YORK STATE DEPARTMENT OF TRANSPORTATION. THERE SHALL BE NO SPLICE WITHIN THE TOP 30 FEET OF PILE.

H–PILE SPLICE DETAILS

NOT TO SCALE

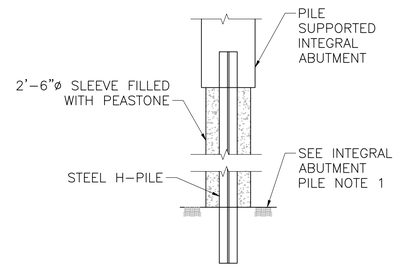

TYPICAL PILE SECTIONS

N.T.S.

SUGGESTED PROCEDURE

1. PRIOR TO EXCAVATION FOR PILES OR MSE WALL, CONTRACTOR SHALL INSTALL THE PERMANENT STEEL SHEETING ADJACENT TO AND ALONG THE RAILROAD TRACK
2. PERFORM EXCAVATION DOWN TO ELEVATIONS AS SPECIFIED IN INTEGRAL ABUTMENT PILE NOTE 1.
3. INSTALL CRASH WALL FOOTING AT SOUTH ABUTMENT.
4. DRIVE PILE IN ACCORDANCE WITH THE DRIVING CRITERIA.
5. CONSTRUCT MSE WALL TO THE BOTTOM OF THE PROPOSED ABUTMENT WITH 2'–6" DIAMETER SLEEVES CENTERED AT PILE LOCATIONS.
6. FILL THE SLEEVES WITH PEASTONE AROUND THE PILES, DURING MSE WALL CONSTRUCTION.
7. CONTRACTOR TO ENSURE PILES ARE CENTERED PER PILE LOCATION TOLERANCES WITHIN THE 2'–6"ø SLEEVES, PRIOR TO FILLING WITH PEASTONE.
8. CUT PILE OFF AT THE CUTOFF ELEVATION.

INTEGRAL ABUTMENT PILE NOTES:

1. CONTRACTOR SHALL EXCAVATE TO THE BOT. OF MSE WALL PANEL ELEVATION PRIOR TO INSTALLING THE BRIDGE PILES. SLEEVES SHALL EXTEND TO THE BOT. OF MSE WALL PANEL ELEVATION.
2. AFTER DRIVING PILES, 2'–6"ø SLEEVE SHALL BE LOWERED OVER PILE. SLEEVES SHALL BE FILLED WITH PEASTONE AND SHALL BE DONE IN LIFTS SUCH THAT THE LEVEL OF PEASTONE IS EQUAL TO THE MSE WALL BACKFILL AT ALL TIMES, AND SO THAT SOILE COMPACTION CAN BE PERFORMED WITHOUT DISTURBING OR MOVING THE SLEEVE OR PILE.
3. ALL SPLICES SHALL HAVE COMPLETE PENETRATION BUTT WELDS. THERE SHALL BE NO SPLICES WITHIN THE TOP 30 FEET OF PILE. SPLICE WELDS SHALL BE 100% UT.
4. THE FACTORED AXIAL DESIGN LOAD PER PILE IS 230 KIPS AS PER AASHTO LRFD BRIDGE DESIGN SPECIFICATIONS STRENGTH I LOAD COMBINATION.
5. THE FACTORED STRUCTURAL RESISTANCE PER PILE IS 453 KIPS AND IS THE PRODUCT OF THE NOMINAL STRUCTURAL RESISTANCE OF 906 KIPS AND A RESISTANCE FACTOR OF 0.50.
6. PILES SHALL BE DRIVEN TO BEDROCK AS SHOWN ON THE ABUTMENT SHEETS. HEAVY DUTY PILE SHOES SHALL BE INSTALLED ON THE TIPS OF ALL PILES. PREFABRICATED PILE SHOES MAY BE USED IF APPROVED BY THE ENGINEER.
7. DETERMINATION OF THE DRIVEN PILE RESISTANCE, PILE DRIVING CRITERIA, AND PILE INTEGRITY SHALL BE PERFORMED USING A PDA ANALYSIS.
   DRIVING/TESTING METHOD WITH A RESISTANCE FACTOR OF 0.50. PILES SHALL BE INSTALLED TO ACHIEVE A FACTORED DRIVEN RESISTANCE EQUAL TO OR GREATER THAN THE FACTORED AXIAL DESIGN LOAD.
8. THE CONTRACTOR SHALL SUBMIT A PILE SCHEDULE, PILE INSTALLATION, AND PILE DRIVING/TESTING PLAN FOR REVIEW AND APPROVAL OF THE ENGINEER.
9. PILES SHALL CONFORM TO AASHTO M270 GRADE 50.

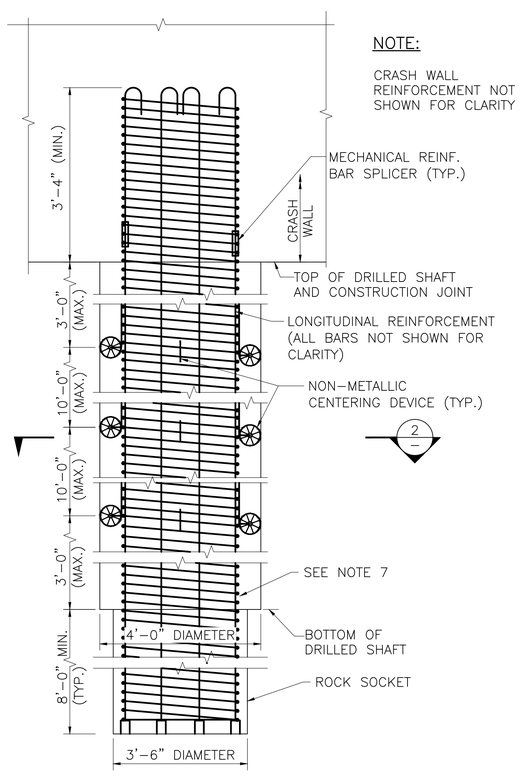

NOTE:

CRASH WALL REINFORCEMENT NOT SHOWN FOR CLARITY

DRILLED SHAFT – VERTICAL SECTION

SCALE: $\frac{3}{4}$" = 1'–0"

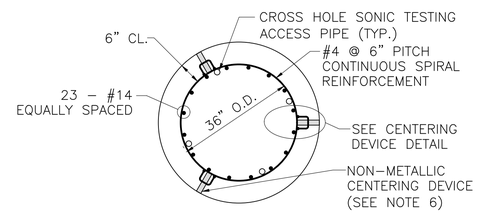

SECTION 2

SCALE: $\frac{3}{4}$" = 1'–0"

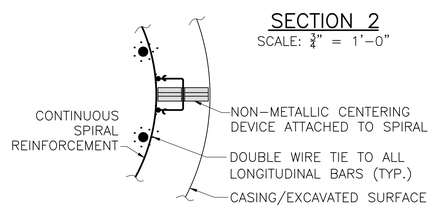

CENTERING DEVICE DETAIL

NOT TO SCALE

NOTES:

1. DRILLED SHAFT CONCRETE SHALL BE 4000 PSI, $\frac{3}{8}$ IN, 660 CEMENT CONCRETE.
   THE CLEAR SPACING BETWEEN STEEL REINFORCEMENT BARS SHALL BE AT LEAST $1\frac{7}{8}$".
2. THE FACTORED GEOTECHNICAL SHAFT RESISTANCE IS 827 KIPS AND IS THE PRODUCT OF THE NOMINAL GEOTECHNICAL RESISTANCE OF 1654KIPS AND A RESISTANCE FACTOR OF 0.50. THE FACTORED DESIGN AXIAL LOAD PER SHAFT IS 679.15 KIPS AS PER AASHTO LRFD BRIDGE DESIGN SPECIFICATIONS STRENGTH I LOAD COMBINATION.
   THE FACTORED STRUCTURAL SHAFT RESISTANCE IS 1043 KIPS AND IS THE PRODUCT OF THE NOMINAL STRUCTURAL RESISTANCE OF 2086 KIPS AND A RESISTANCE FACTOR OF 0.50.
3. CENTERING DEVICES SHALL BE CONSTRUCTED OF AN APPROVED NON–METALLIC DURABLE MATERIAL.
4. THE NON–METALLIC CENTERING DEVICES SHALL BE OF ADEQUATE SIZE TO INSURE A MINIMUM 5" ANNULAR SPACE BETWEEN THE OUTSIDE OF THE REINFORCEMENT CAGE AND THE SIDES OF THE EXCAVATED HOLE OR INSIDE OF CASING.
5. THERE SHALL BE A MINIMUM OF 3 GROUPS OF NON–METALLIC CENTERING DEVICES FOR SHAFTS LESS THAN 26'–0" IN LENGTH.
6. NON–METALLIC CENTERING DEVICES SHALL BE PLACED AT A MAXIMUM SPACING OF 2'–6" AROUND THE CIRCUMFERENCE OF THE SHAFT.
7. EACH LONGITUDINAL BAR SHALL BE SUPPORTED BY A 3" HIGH BOLSTER OF APPROVED NON–METALLIC DURABLE MATERIAL.
8. SPLICES IN THE LONGITUDINAL REINFORCEMENT SHALL BE MADE WITH MECHANICAL REINFORCING BAR SPICERS AND SHALL BE STAGGERED A MINIMUM OF 2'–0".
9. IF SPLICING OF SPIRAL REINFORCEMENT IS NECESSARY, A MINIMUM OF 2" CLEARANCE SHALL BE PROVIDED BETWEEN THE OUTSIDE SURFACE OF MECHANICAL REINFORCING BAR SPLICERS AND THE DRILLED SHAFT CASING OR EXCAVATED SURFACE.
10. WELDING OF LONGITUDINAL REINFORCEMENT SHALL NOT BE PERMITTED. WELDING OF OTHER REINFORCING BARS MAY BE PERMITTED WITH THE WRITTEN APPROVAL OF THE ENGINEER.

MONTH DD, YYYY	ISSUED FOR CONSTRUCTION
DATE	DESCRIPTION
USE ONLY PRINTS OF LATEST DATE	

PROGRESS PRINT - NOT FOR CONSTRUCTION

\\VHB\GBL\PROJ\WAT-TE\08363.27\CAD\TE\604996\BR\DWG\604996_BR(FDN_DET).DWG
604996_BR(FDN_DET).DWG Plotted on 2-Aug-2020 8:00 PM
Second Structural Submittal (S2) 3-August-2020

WOBURN
NEW BOSTON STREET

STATE	FED. AID PROJ. NO.	SHEET NO.	TOTAL SHEETS
MA	–	94	147
PROJECT FILE NO. 604996			

NORTH ABUTMENT PLAN AND ELEVATION

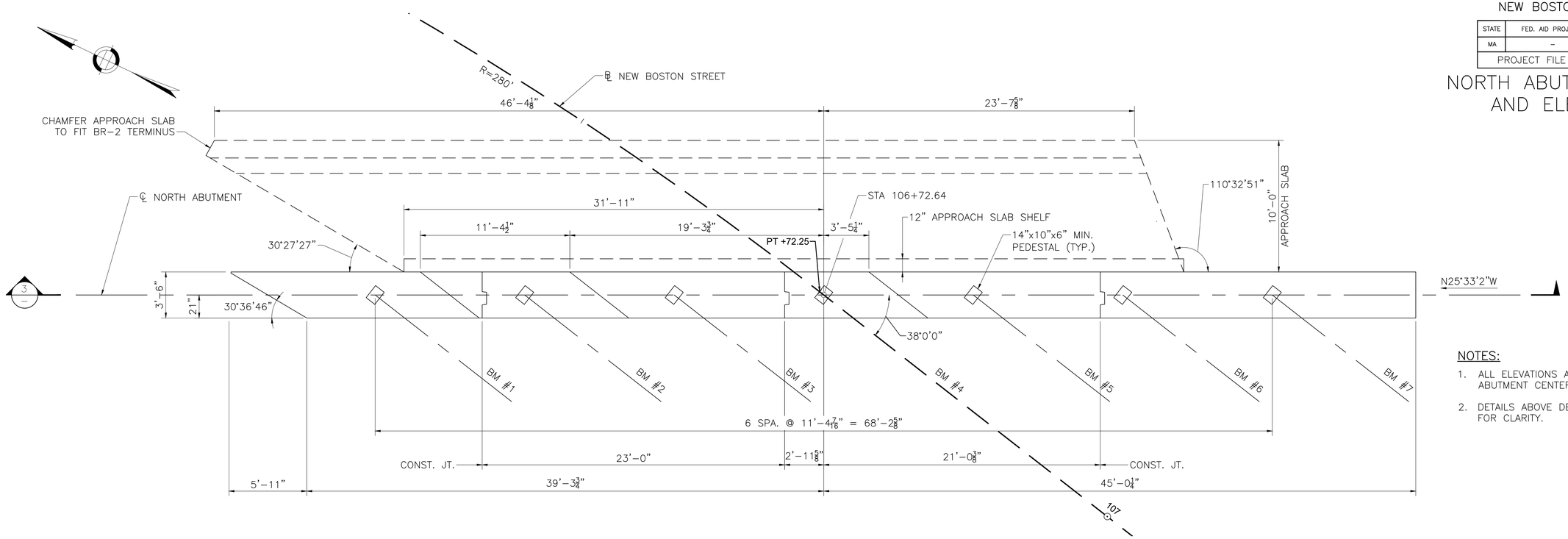

NORTH ABUTMENT PLAN

SCALE: 1/4" = 1'–0"

NOTES:

1. ALL ELEVATIONS ARE SHOWN AT ABUTMENT CENTERLINE.
2. DETAILS ABOVE DECK LEVEL OMITTED FOR CLARITY.

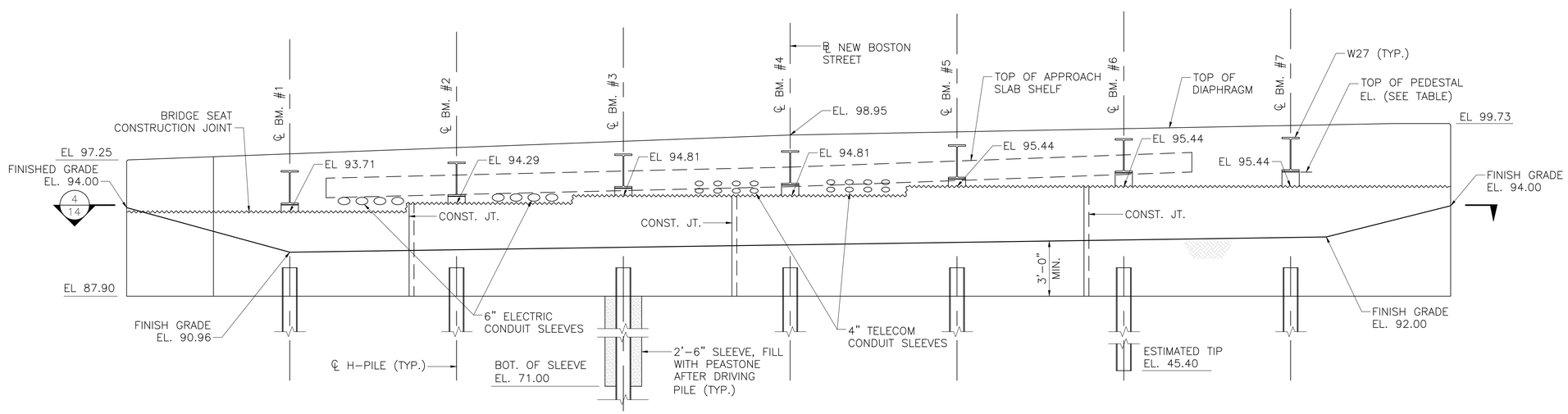

TOP OF PEDESTAL ELEVATION	
BEAM	ELEVATION
1	94.21
2	94.79
3	95.31
4	95.78
5	95.94
6	96.07
7	96.16

NOTE:

ELEVATIONS DO NOT INCLUDE ERECTION PAD THICKNESS.

SECTION 3 – CENTERLINE OF NORTH ABUTMENT

SCALE: 1/4" = 1'–0"

MONTH DD, YYYY	ISSUED FOR CONSTRUCTION
DATE	DESCRIPTION
USE ONLY PRINTS OF LATEST DATE	

SHEET 13 OF 47 SHEETS BRIDGE NO. W–43–017 (BB4)

PROGRESS PRINT - NOT FOR CONSTRUCTION

604996_BR(NORTH_ABUT).DWG Plotted on 2-Aug-2020 8:00 PM

Second Structural Submittal (S2) 3-August-2020

\\VHB\GBL\PROJ\WAT-TE\08363.27\CAD\TE604996\BR\DWG\604996_BR(NORTH_ABUT).DWG

WOBURN
NEW BOSTON STREET

STATE	FED. AID PROJ. NO.	SHEET NO.	TOTAL SHEETS
MA	–	95	147
PROJECT FILE NO. 604996			

NORTH ABUTMENT HORIZONTAL SECTION

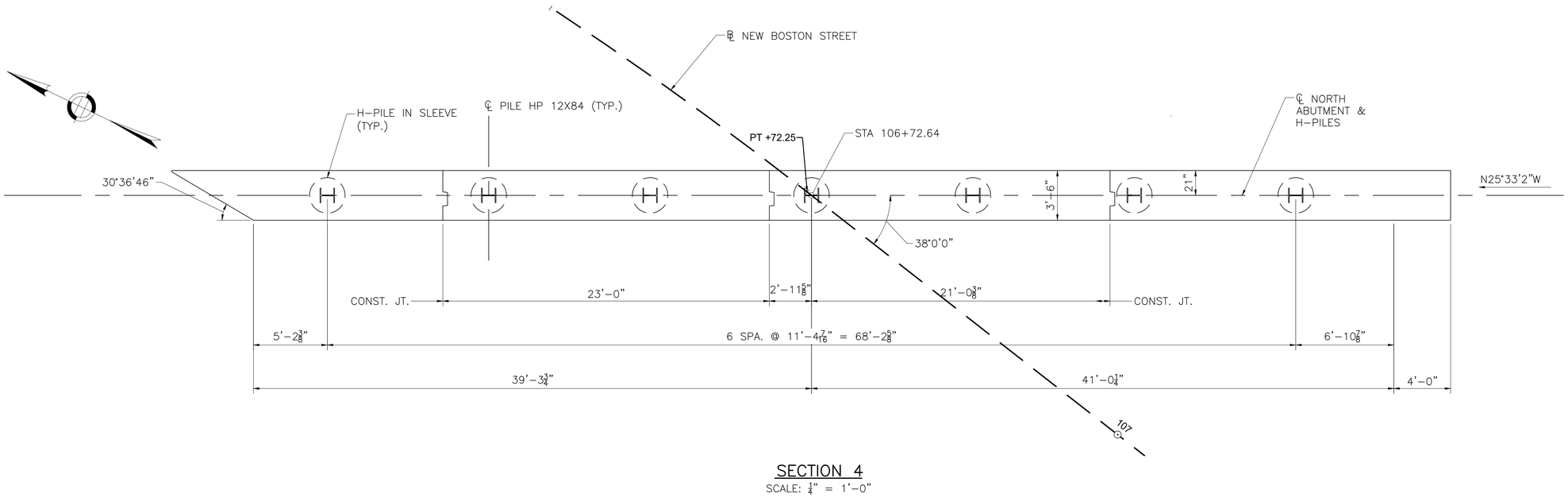

SECTION 4
SCALE: 1/4" = 1'-0"

MONTH DD, YYYY	ISSUED FOR CONSTRUCTION
DATE	DESCRIPTION
USE ONLY PRINTS OF LATEST DATE	

SHEET 14 OF 47 SHEETS BRIDGE NO. W-43-017 (BB4)

PROGRESS PRINT - NOT FOR CONSTRUCTION

604996_BR(NORTH_ABUT).DWG Plotted on 2-Aug-2020 8:00 PM

Second Structural Submittal (S2) 3-August-2020

\\VHB\GBL\PROJ\WAT-TE\08363.27\CAD\TE\604996\BR\DWG\604996_BR(NORTH_ABUT).DWG

WOBURN
NEW BOSTON STREET

STATE	FED. AID PROJ. NO.	SHEET NO.	TOTAL SHEETS
MA	–	96	147
PROJECT FILE NO. 604996			

NORTH MSE WALL PLAN AND ELEVATION (1 OF 3)

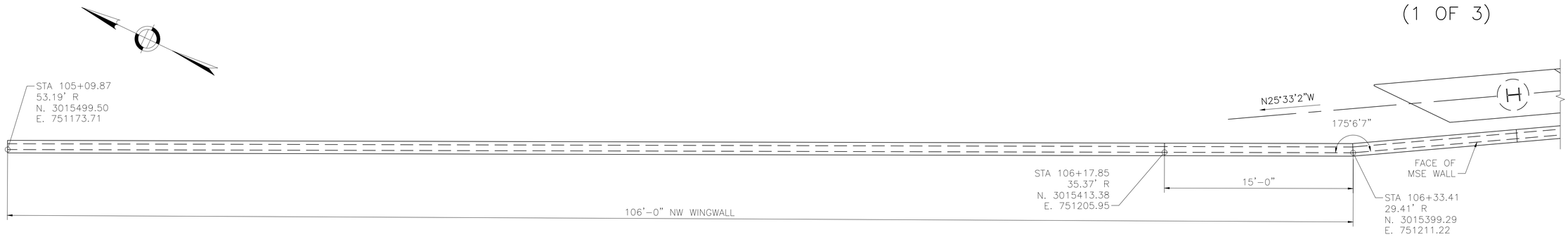

NORTH MSE WALL – PLAN

SCALE: ¼" = 1'–0"

NOTES:

1. MSE WALL PANELS SHALL HAVE A FRACTURED FINISH UNLESS OTHERWISE NOTED.
2. SEE SHEET 16 OF 47 FOR ADDITIONAL MSE WALL NOTES
3. COORDINATE WATER LINE SUPPORT WITH MSE WALL COPING AND CHAIN LINE FENCE.

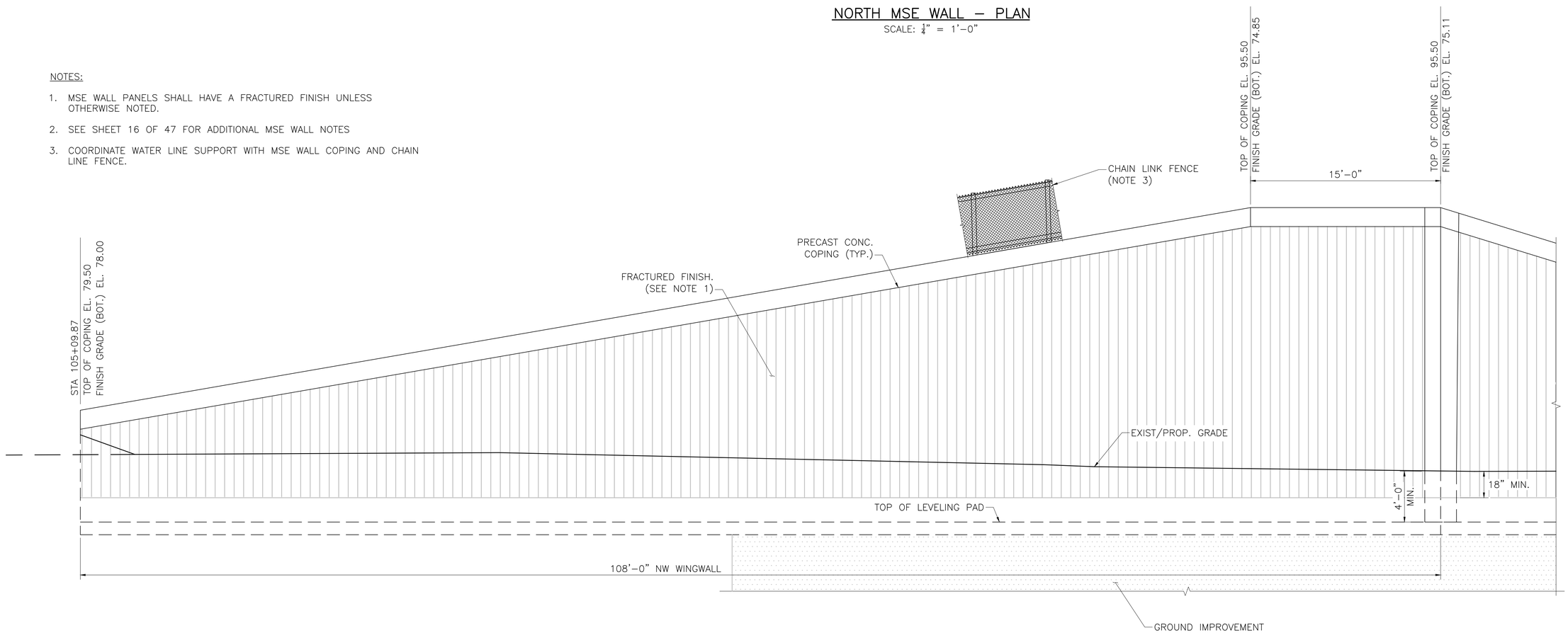

NORTH MSE WALL – PARTIAL ELEVATION

SCALE: ¼" = 1'–0"

DATE	DESCRIPTION
MONTH DD, YYYY	ISSUED FOR CONSTRUCTION
USE ONLY PRINTS OF LATEST DATE	

SHEET 15 OF 47 SHEETS BRIDGE NO. W–43–017 (BB4)

PROGRESS PRINT - NOT FOR CONSTRUCTION

\\FHBIGBL\PROJ\WAT-TE\08363.27\CAD\TE\604996\BR\DWG\604996_BR(NORTH MSE).DWG

604996_BR(NORTH MSE).DWG Plotted on 3-Aug-2020 3:23 PM

Second Structural Submittal (S2) 3-August-2020

WOBURN
NEW BOSTON STREET

STATE	FED. AID PROJ. NO.	SHEET NO.	TOTAL SHEETS
MA	–	97	147
PROJECT FILE NO. 604996			

NORTH MSE WALL PLAN AND ELEVATION (2 OF 3)

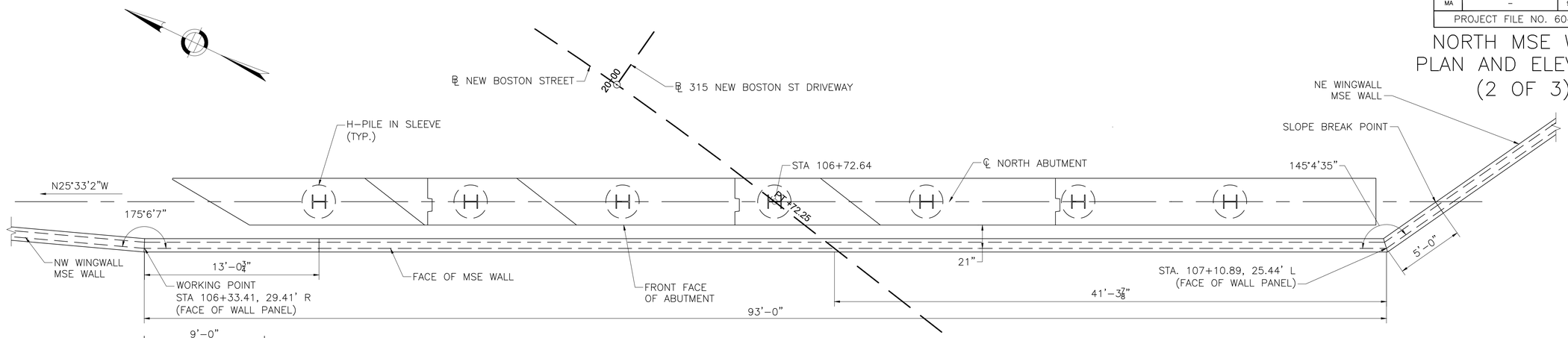

NORTH MSE WALL – PLAN

SCALE: ¼" = 1'-0"

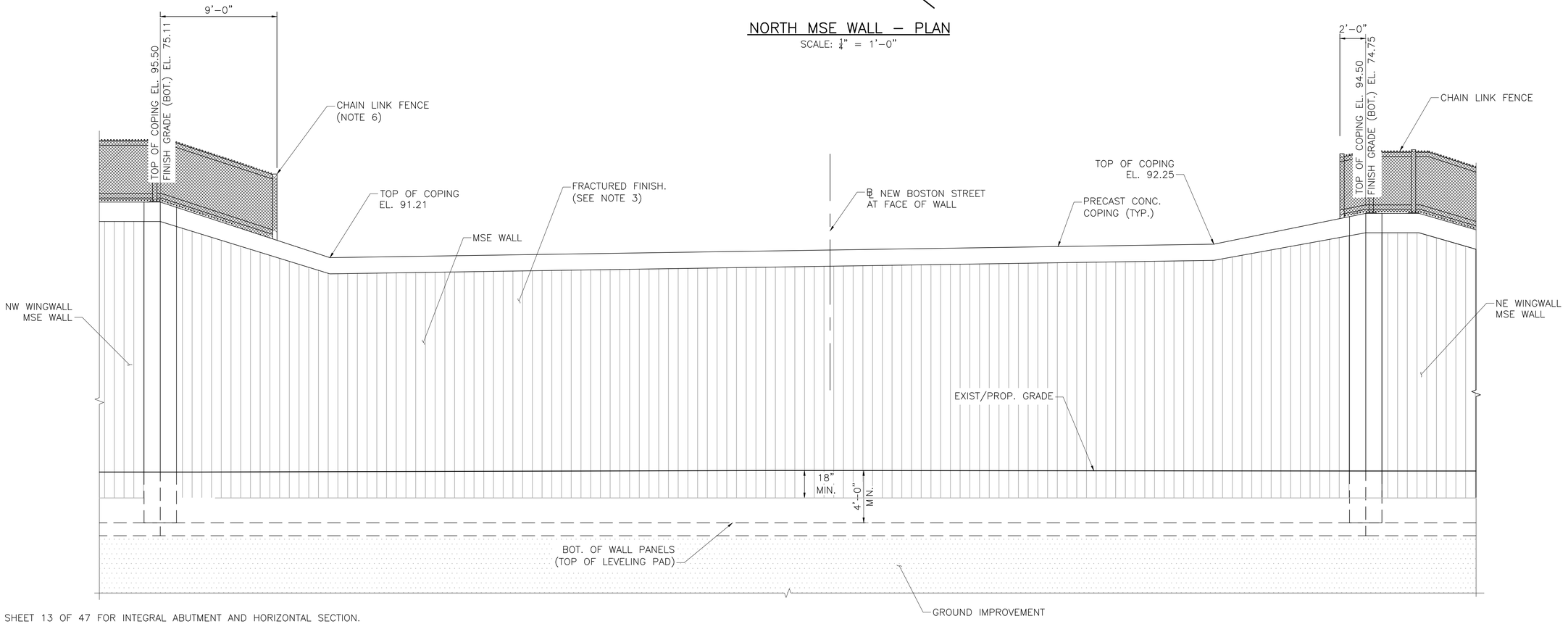

NORTH MSE WALL – PARTIAL ELEVATION

SCALE: ¼" = 1'-0"

NOTES:

1. SEE SHEET 13 OF 47 FOR INTEGRAL ABUTMENT AND HORIZONTAL SECTION.
2. SEE SHEET 27 OF 47 FOR TYPICAL MSE WALL SECTIONS AND DETAILS.
3. MSE WALL PANELS SHALL HAVE A FRACTURED FINISH UNLESS OTHERWISE NOTED.
4. LEVELING PAD THICKNESS TO BE DETERMINED BY MSE WALL MANUFACTURER.
5. THE MSE WALLS SHALL BE DESIGNED TO RESIST ADDITIONAL LOADS INDUCED BY ABUTMENT PILES AS SHOWN ON SHEET 21 OF 47. THE TRANSVERSE LOADING SHALL EXTEND ALONG THE FACE OF THE MSE WALLS FOR A MINIMUM DISTANCE 3'-0" BEYOND THE PROJECTION OF THE EXTERIOR PILES.
6. COORDINATE WATER LINE SUPPORT WITH MSE WALL COPING AND CHAIN LINE FENCE.

DATE	DESCRIPTION
MONTH DD, YYYY	ISSUED FOR CONSTRUCTION
USE ONLY PRINTS OF LATEST DATE	

PROGRESS PRINT - NOT FOR CONSTRUCTION

\\WHBGBL\PROJ\WAT-TE\08363.27\CAD\TE\604996\BR\DWG\604996_BR(NORTH MSE).DWG
604996_BR(NORTH MSE).DWG Plotted on 3-Aug-2020 3:23 PM
Second Structural Submittal (S2) 3-August-2020

WOBURN
NEW BOSTON STREET

STATE	FED. AID PROJ. NO.	SHEET NO.	TOTAL SHEETS
MA	–	98	147
PROJECT FILE NO. 604996			

NORTH MSE WALL PLAN AND ELEVATION (3 OF 3)

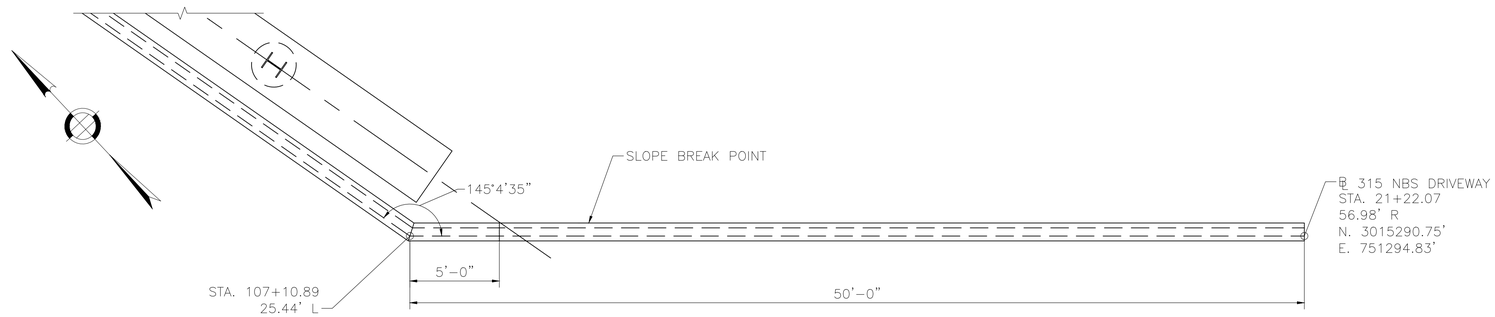

NORTH MSE WALL – PLAN

SCALE: $\frac{1}{4}$" = 1'–0"

NOTES:

1. MSE WALL PANELS SHALL HAVE A FRACTURED FINISH UNLESS OTHERWISE NOTED.
2. SEE SHEET 16 OF 47 FOR ADDITIONAL MSE WALL NOTES

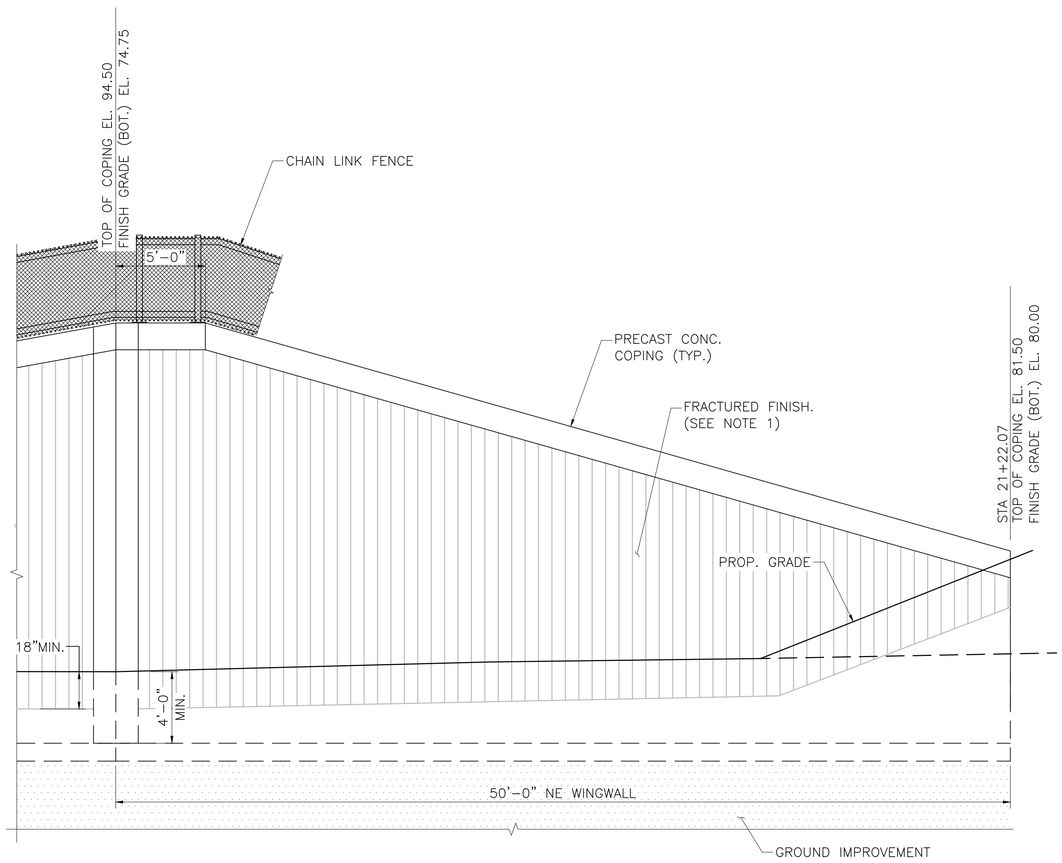

NORTH MSE WALL – PARTIAL ELEVATION

SCALE: $\frac{1}{4}$" = 1'–0"

MONTH DD, YYYY	ISSUED FOR CONSTRUCTION
DATE	DESCRIPTION
USE ONLY PRINTS OF LATEST DATE	

SHEET 17 OF 47 SHEETS BRIDGE NO. W–43–017 (BB4)

PROGRESS PRINT - NOT FOR CONSTRUCTION

604996_BR(NORTH MSE).DWG Plotted on 3-Aug-2020 1:30 PM

Second Structural Submittal (S2) 3-August-2020

\\VHB\GBL\PROJ\WAT-TE\08363.27\CAD\TE\604996\BR\DWG\604996_BR(NORTH MSE).DWG

WOBURN
NEW BOSTON STREET

STATE	FED. AID PROJ. NO.	SHEET NO.	TOTAL SHEETS
MA	–	99	147
PROJECT FILE NO. 604996			

SOUTH ABUTMENT PLAN AND ELEVATION

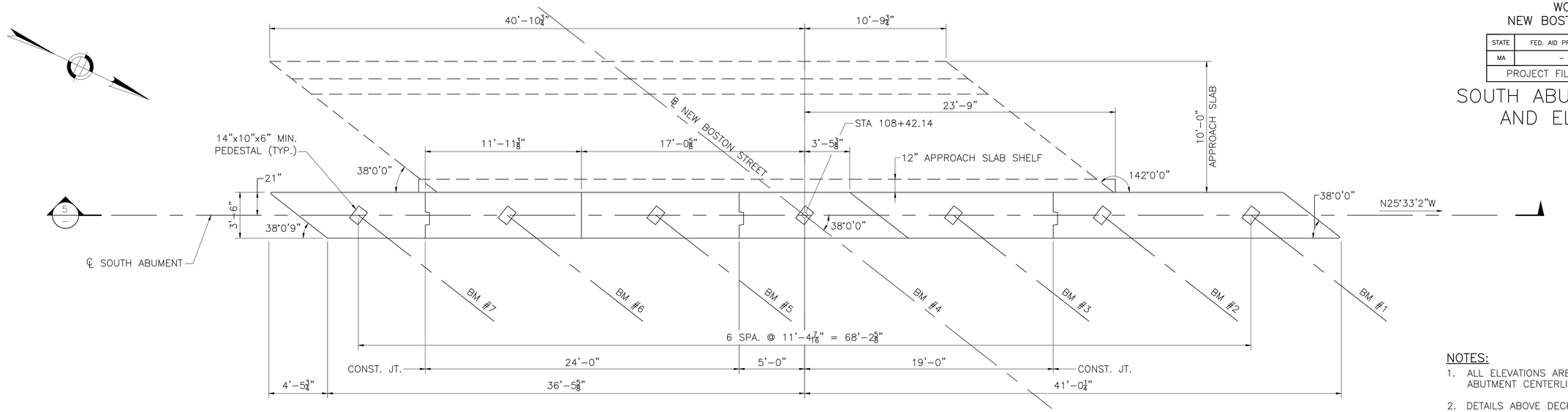

SOUTH ABUTMENT PLAN

SCALE: ¼" = 1'–0"

NOTES:

1. ALL ELEVATIONS ARE SHOWN AT ABUTMENT CENTERLINE.
2. DETAILS ABOVE DECK LEVEL OMITTED FOR CLARITY.

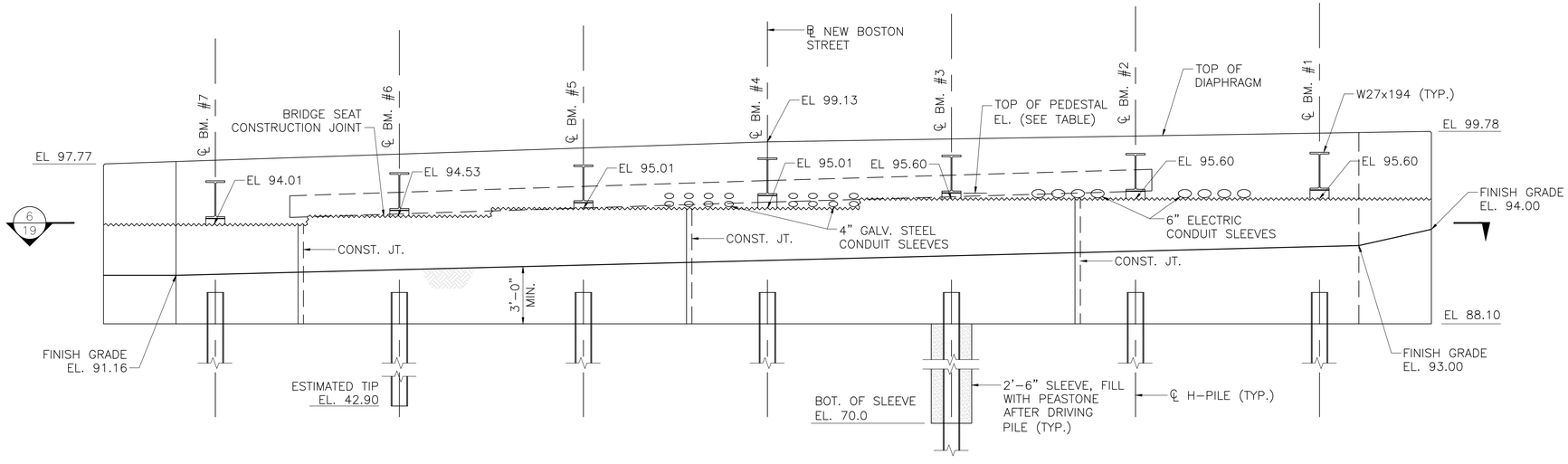

TOP OF PEDESTAL ELEVATION	
BEAM	ELEVATION
1	96.28
2	96.21
3	96.10
4	95.96
5	95.51
6	95.03
7	94.51

NOTE:

ELEVATIONS DO NOT INCLUDE ERECTION PAD THICKNESS.

SECTION 5 – CENTERLINE OF SOUTH ABUTMENT

SCALE: ¼" = 1'–0"

MONTH DD, YYYY	ISSUED FOR CONSTRUCTION
DATE	DESCRIPTION
USE ONLY PRINTS OF LATEST DATE	

PROGRESS PRINT - NOT FOR CONSTRUCTION

\\WHBIGBLIPROJ\WAT-TE\08363.27\CAD\TE\604996\BR\DWG\604996_BR(SOUTH_ABUT).DWG
604996_BR(SOUTH_ABUT).DWG Plotted on 2-Aug-2020 10:39 PM
Second Structural Submittal (S2) 3-August-2020

WOBURN
NEW BOSTON STREET

STATE	FED. AID PROJ. NO.	SHEET NO.	TOTAL SHEETS
MA	–	100	147
PROJECT FILE NO. 604996			

SOUTH ABUTMENT HORIZONTAL SECTION

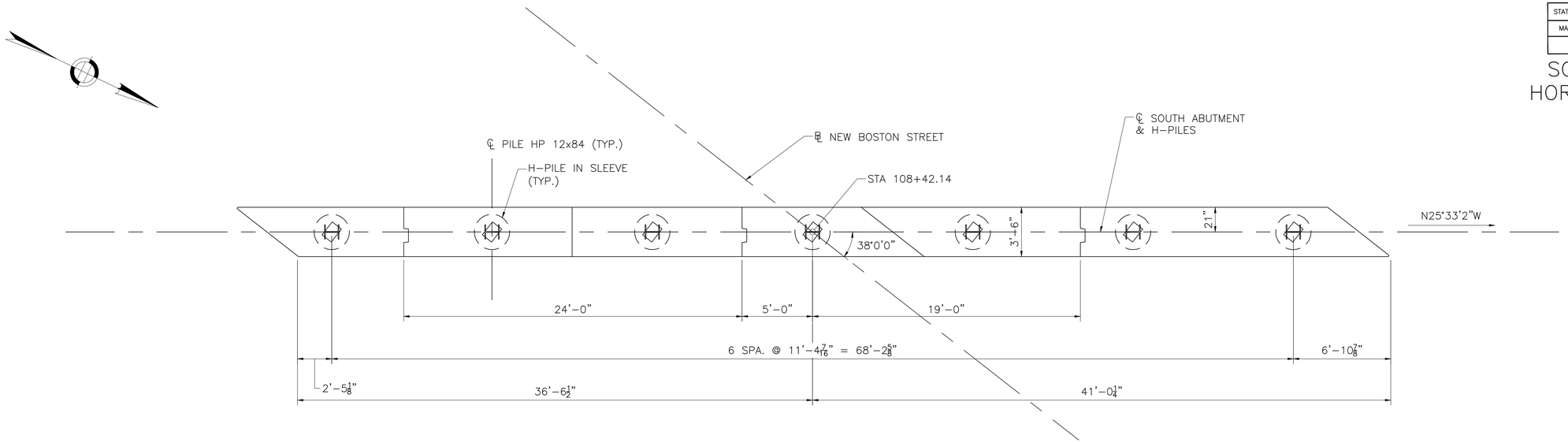

SECTION 6
SCALE: 1/4" = 1'-0"

MONTH DD, YYYY	ISSUED FOR CONSTRUCTION
DATE	DESCRIPTION
USE ONLY PRINTS OF LATEST DATE	

SHEET 19 OF 47 SHEETS BRIDGE NO. W-43-017 (BB4)

PROGRESS PRINT - NOT FOR CONSTRUCTION

\\VHB\GBL\PROJ\WAT-TE\08363.27\CAD\TE\604996\BR\DWG\604996_BR(SOUTH_ABUT).DWG

604996_BR(SOUTH_ABUT).DWG Plotted on 2-Aug-2020 10:40 PM

Second Structural Submittal (S2) 3-August-2020

WOBURN
NEW BOSTON STREET

STATE	FED. AID PROJ. NO.	SHEET NO.	TOTAL SHEETS
MA	–	101	147
PROJECT FILE NO. 604996			

SOUTH MSE WALL PLAN AND ELEVATION (1 OF 5)

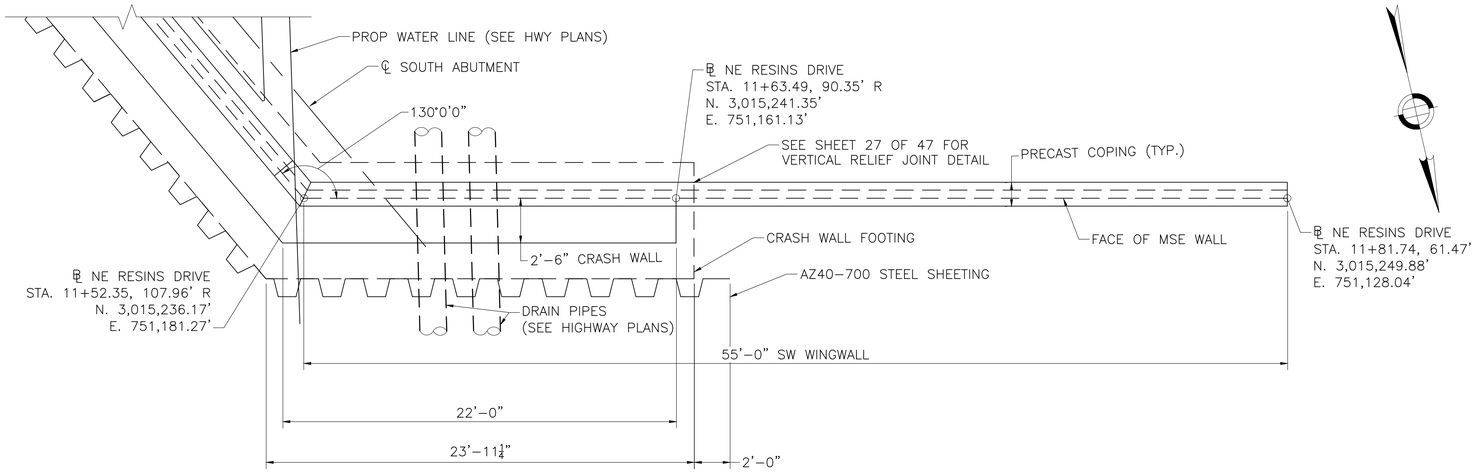

SOUTH MSE WALL PARTIAL PLAN

SCALE: ¼" = 1'-0"

NOTES:

1. MSE WALL PANELS SHALL HAVE A FRACTURED FINISH UNLESS OTHERWISE NOTED. ELIMINATE FRACTURED FINISH ON MSE WALL PANELS BEHIND THE CRASH WALL UP TO 12" ABOVE TOP OF CRASH WALL.
2. SEE SHEET 21 OF 47 FOR ADDITIONAL MSE WALL NOTES.
3. COORDINATE WATER LINE SUPPORT WITH MSE WALL COPING AND CHAIN LINE FENCE.

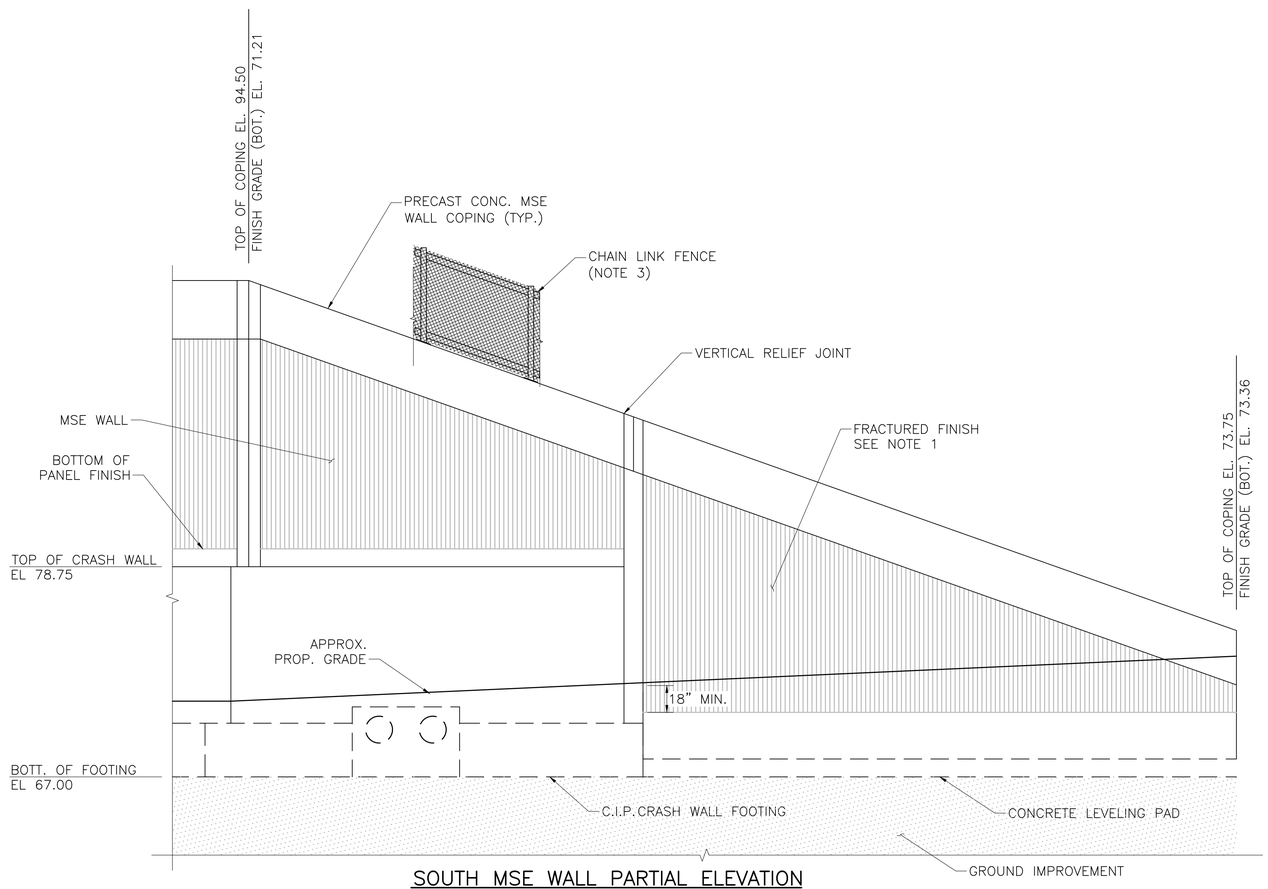

SOUTH MSE WALL PARTIAL ELEVATION

SCALE: ¼" = 1'-0"

MONTH DD, YYYY	ISSUED FOR CONSTRUCTION
DATE	DESCRIPTION
USE ONLY PRINTS OF LATEST DATE	

PROGRESS PRINT - NOT FOR CONSTRUCTION

\\VHB\GBL\PROJ\WAT-TE\08363.27\CADTE\604996\BR\DWG\604996_BR(SOUTH_MSE).DWG
604996_BR(SOUTH_MSE).DWG Plotted on 3-Aug-2020 3:30 PM
Second Structural Submittal (S2) 3-August-2020

WOBURN
NEW BOSTON STREET

STATE	FED. AID PROJ. NO.	SHEET NO.	TOTAL SHEETS
MA	–	102	147
PROJECT FILE NO. 604996			

SOUTH MSE WALL PLAN AND ELEVATION (2 OF 5)

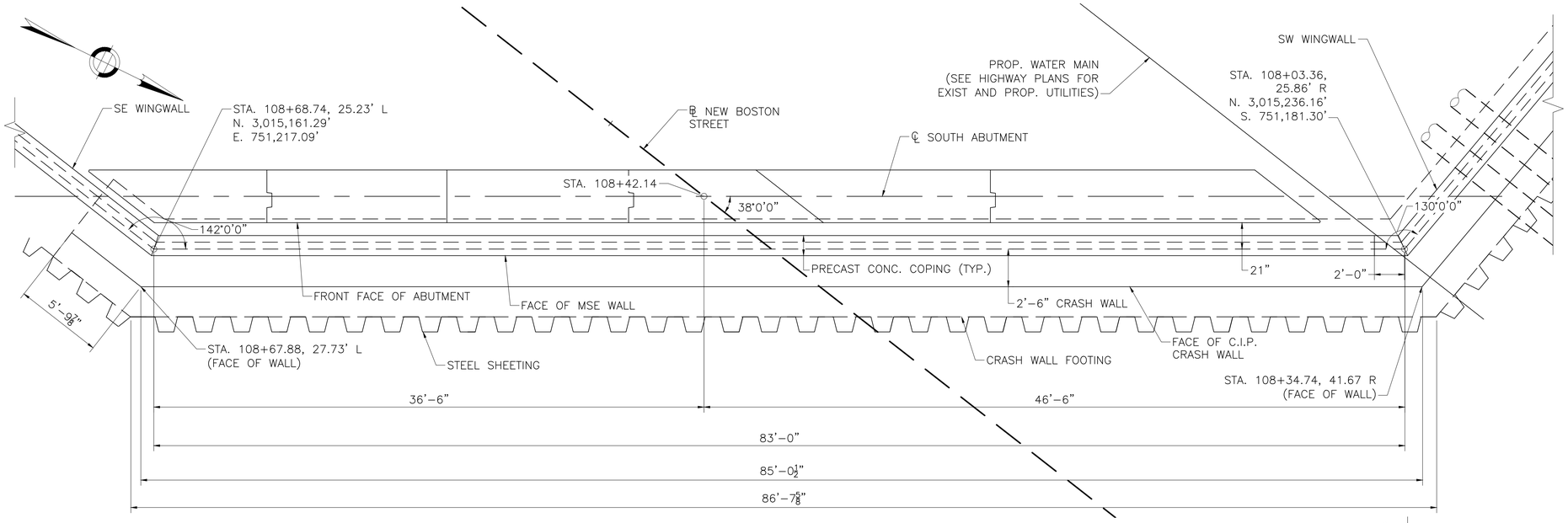

SOUTH MSE WALL AND CRASH WALL PARTIAL PLAN

SCALE: ¼" = 1'–0"

NOTES:

1. SEE SHEET 18 OF 47 FOR SOUTH INTEGRAL ABUTMENT PLAN AND SECTIONS.
2. SEE SHEET 27 OF 47 FOR TYPICAL MSE WALL SECTION.
3. MSE WALL PANELS SHALL HAVE A FRACTURED FINISH UNLESS OTHERWISE NOTED. ELIMINATE FRACTURED FINISH ON MSE WALL PANELS BEHIND THE CRASH WALL UP TO 12" ABOVE TOP OF CRASH WALL.
4. LEVELING PAD ELEVATION TO BE DETERMINED BY MSE WALL MANUFACTURER.
5. SEE SHEET 27 OF 47 FOR CRASH WALL DETAILS.
6. THE MSE WALLS SHALL BE DESIGNED TO RESIST ADDITIONAL LOADS INDUCED BY ABUTMENT PILES AS SHOWN IN THE DIAGRAM BELOW. THE TRANSVERSE LOADING SHALL EXTEND ALONG THE FACE OF THE MSE WALLS FOR A DISTANCE 3'–0" BEYOND THE PROJECTION OF THE EXTERIOR PILES.
7. COORDINATE WATER LINE SUPPORT WITH MSE WALL COPING AND CHAIN LINE FENCE.

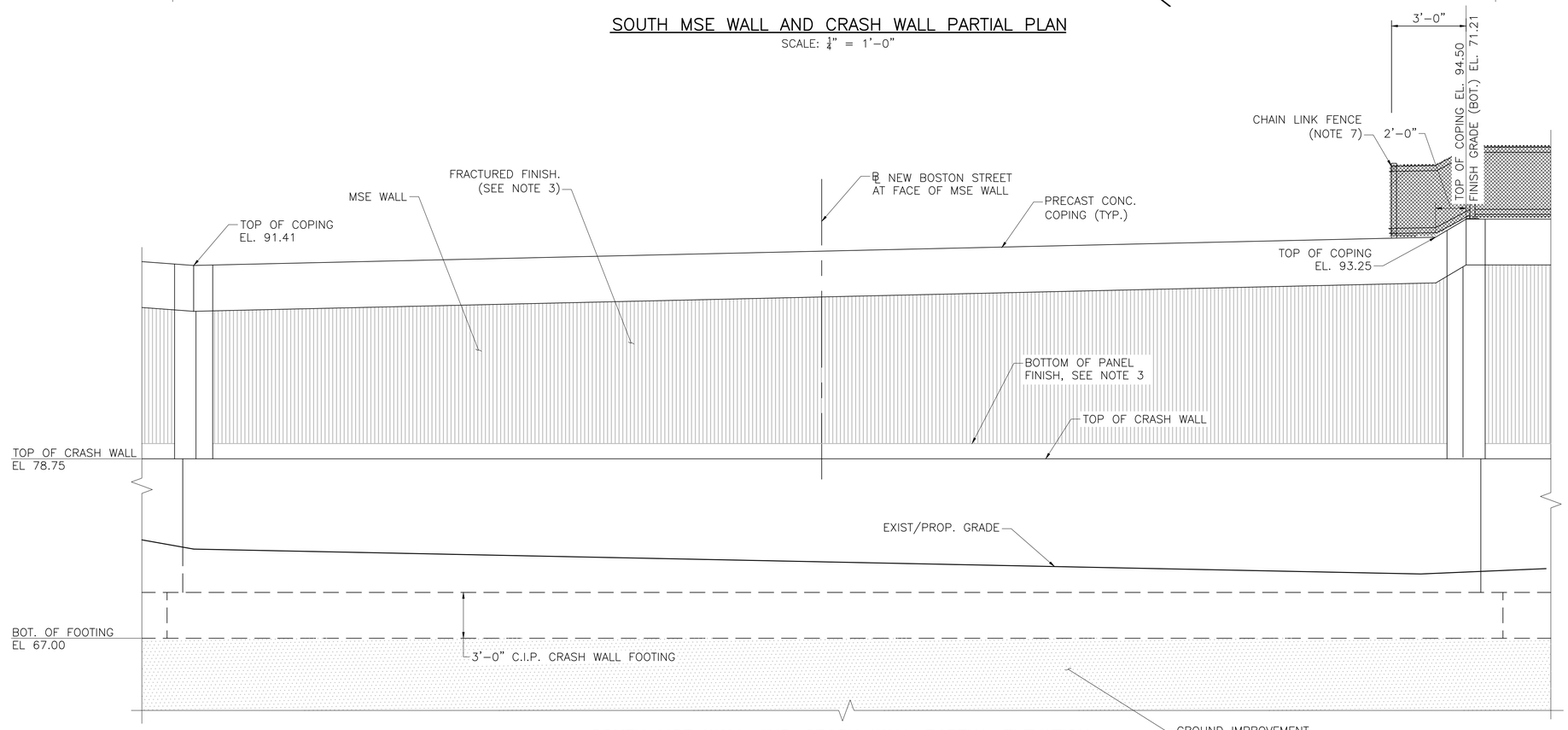

SOUTH MSE WALL AND CRASH WALL PARTIAL ELEVATION

SCALE: ¼" = 1'–0"

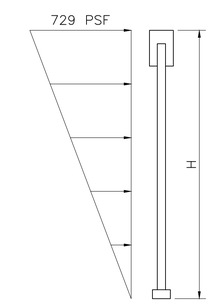

H – HEIGHT OF MSE WALL FROM LEVELING PAD TO PROPOSED GRADE.

FACTORED MSE WALL SUPPLEMENTAL LOADING

N.T.S.

MONTH DD, YYYY	ISSUED FOR CONSTRUCTION
DATE	DESCRIPTION
USE ONLY PRINTS OF LATEST DATE	

SHEET 21 OF 47 SHEETS BRIDGE NO. W–43–017 (BB4)

PROGRESS PRINT - NOT FOR CONSTRUCTION

\\WHBGBL\PROJ\WAT-TE08363.27\CAD\TE604996\BR\DWG\604996_BR(SOUTH_MSE).DWG
604996_BR(SOUTH_MSE).DWG Plotted on 3-Aug-2020 3:31 PM
Second Structural Submittal (S2) 3-August-2020

WOBURN
NEW BOSTON STREET

STATE	FED. AID PROJ. NO.	SHEET NO.	TOTAL SHEETS
MA	–	103	147
PROJECT FILE NO. 604996			

SOUTH MSE WALL PLAN AND ELEVATION (3 OF 5)

NOTES:

1. MSE WALL PANELS SHALL HAVE A FRACTURED FINISH UNLESS OTHERWISE NOTED. ELIMINATE FRACTURED FINISH ON MSE WALL PANELS BEHIND THE CRASH WALL UP TO 12" ABOVE TOP OF CRASH WALL.
2. SEE SHEET 21 OF 47 FOR ADDITIONAL MSE WALL NOTES.

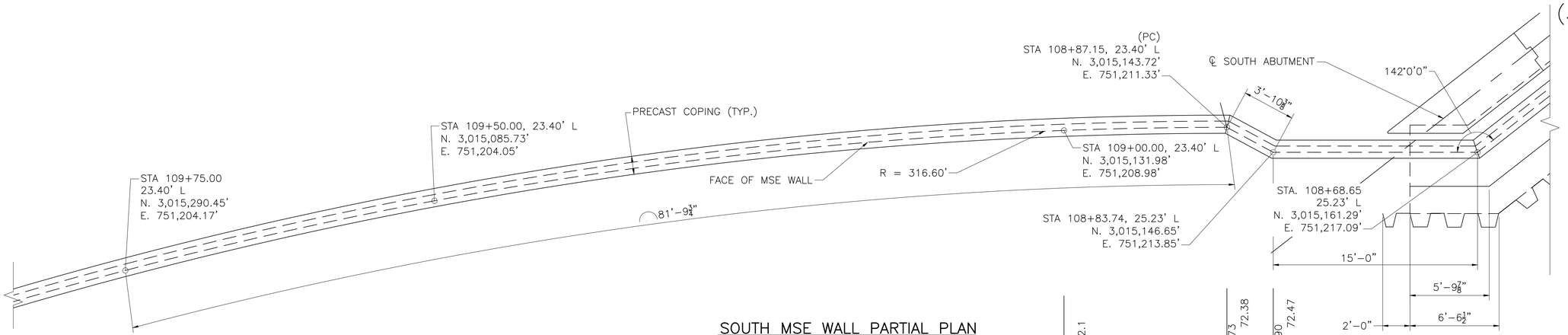

SOUTH MSE WALL PARTIAL PLAN

SCALE: ¼" = 1'-0"

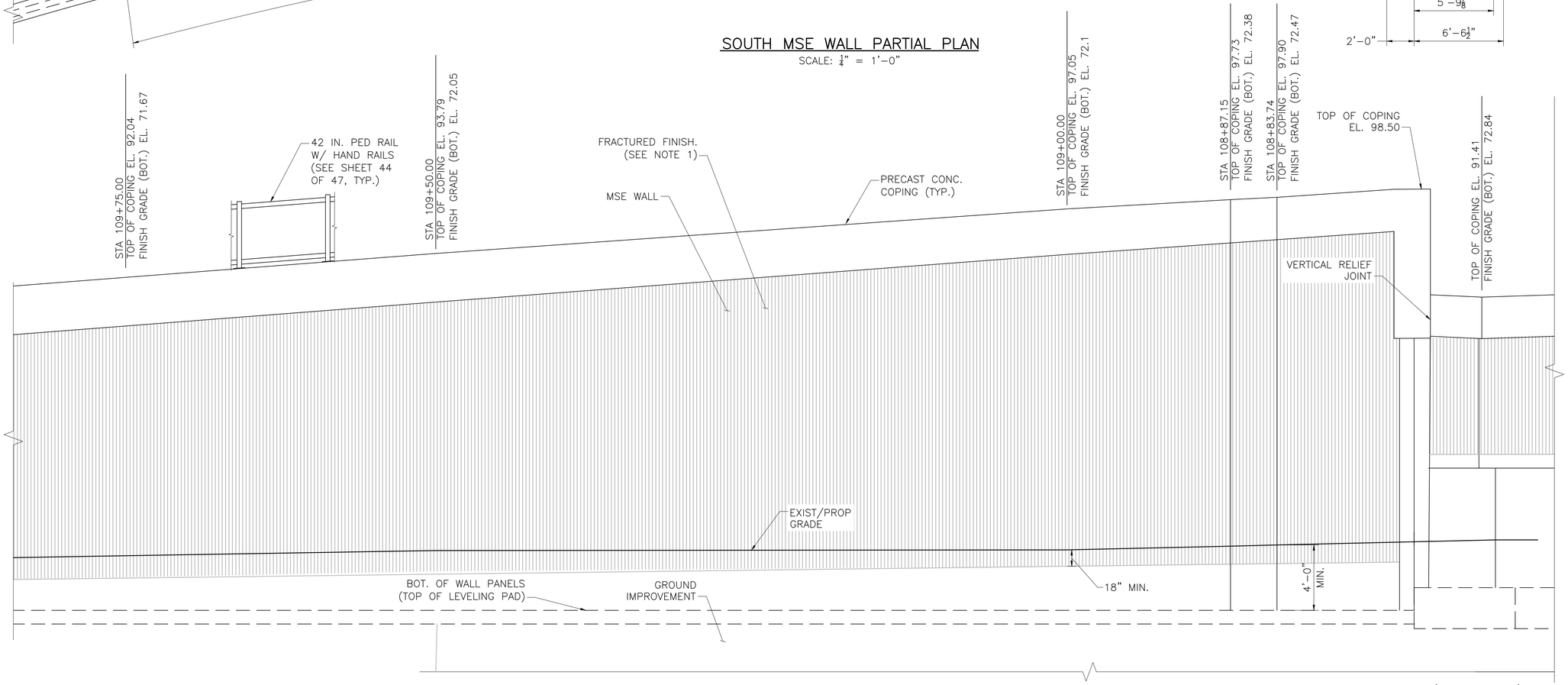

SOUTH MSE WALL PARTIAL ELEVATION

SCALE: ¼" = 1'-0"

MONTH DD, YYYY	ISSUED FOR CONSTRUCTION
DATE	DESCRIPTION
USE ONLY PRINTS OF LATEST DATE	

SHEET 22 OF 47 SHEETS BRIDGE NO. W-43-017 (BB4)

PROGRESS PRINT - NOT FOR CONSTRUCTION

\\VHBGBL\PROJ\WAT-TE08363.27\CADTE\604996\BR\DWG\604996_BR(SOUTH_MSE).DWG

604996_BR(SOUTH_MSE).DWG Plotted on 3-Aug-2020 1:32 PM

Second Structural Submittal (S2) 3-August-2020

WOBURN
NEW BOSTON STREET

STATE	FED. AID PROJ. NO.	SHEET NO.	TOTAL SHEETS
MA	–	104	147
PROJECT FILE NO. 604996			

SOUTH MSE WALL PLAN AND ELEVATION (4 OF 5)

NOTES:

1. MSE WALL PANELS SHALL HAVE A FRACTURED FINISH UNLESS OTHERWISE NOTED.
2. SEE SHEET 21 OF 47 FOR ADDITIONAL MSE WALL NOTES.

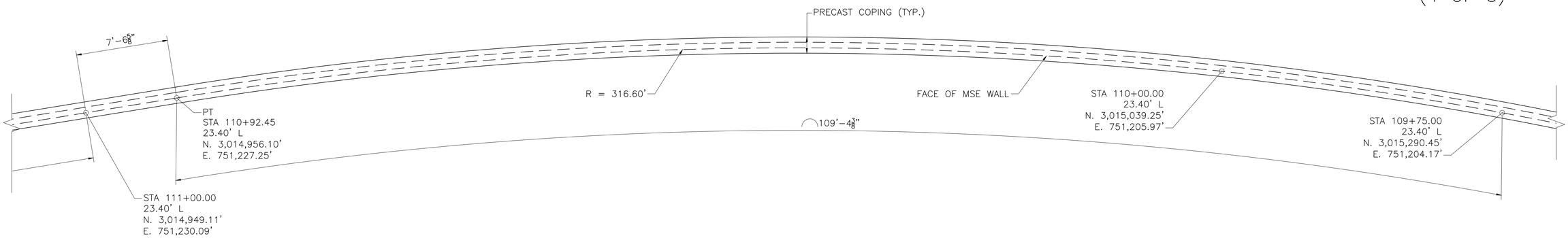

SOUTH MSE WALL PARTIAL PLAN

SCALE: 1/4" = 1'–0"

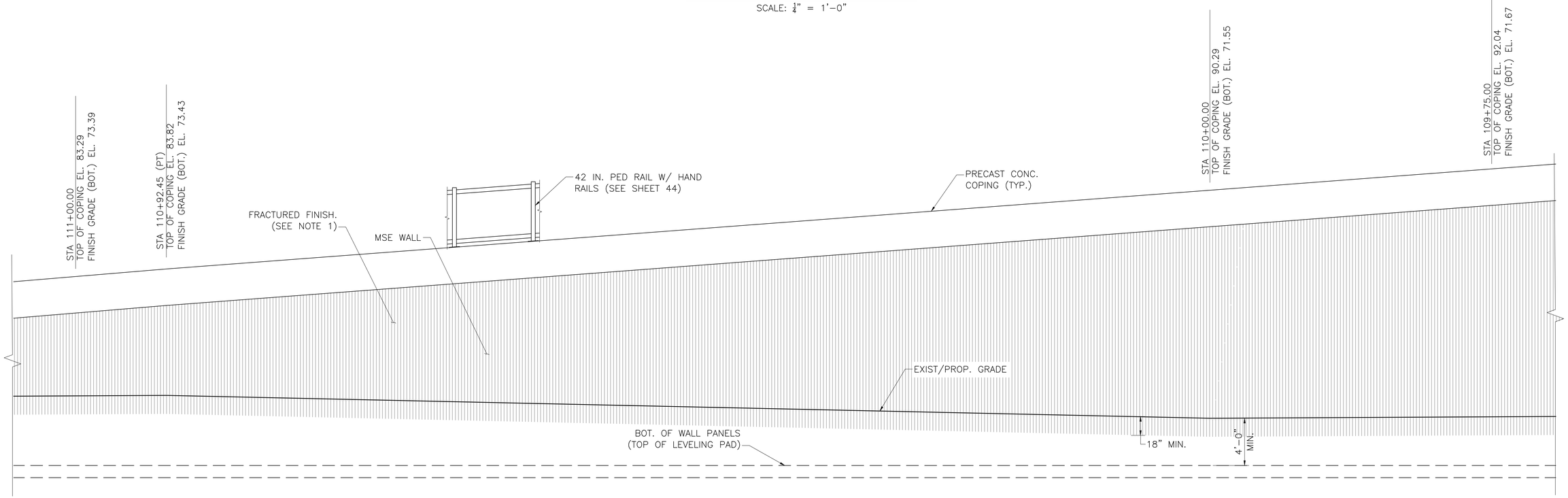

SOUTH MSE WALL PARTIAL ELEVATION

SCALE: 1/4" = 1'–0"

MONTH DD, YYYY	ISSUED FOR CONSTRUCTION
DATE	DESCRIPTION
USE ONLY PRINTS OF LATEST DATE	

PROGRESS PRINT - NOT FOR CONSTRUCTION

\\VHB\GBL\PROJ\WAT-TE\08383.27\CAD\TE\604996\BR\DWG\604996_BR(SOUTH_MSE).DWG
604996_BR(SOUTH_MSE).DWG Plotted on 3-Aug-2020 1:32 PM
Second Structural Submittal (S2) 3-August-2020

WOBURN
NEW BOSTON STREET

STATE	FED. AID PROJ. NO.	SHEET NO.	TOTAL SHEETS
MA	–	105	147
PROJECT FILE NO. 604996			

SOUTH MSE WALL PLAN AND ELEVATION (5 OF 5)

NOTES:

1. MSE WALL PANELS SHALL HAVE A FRACTURED FINISH UNLESS OTHERWISE NOTED.
2. SEE SHEET 21 OF 47 FOR ADDITIONAL MSE WALL NOTES.

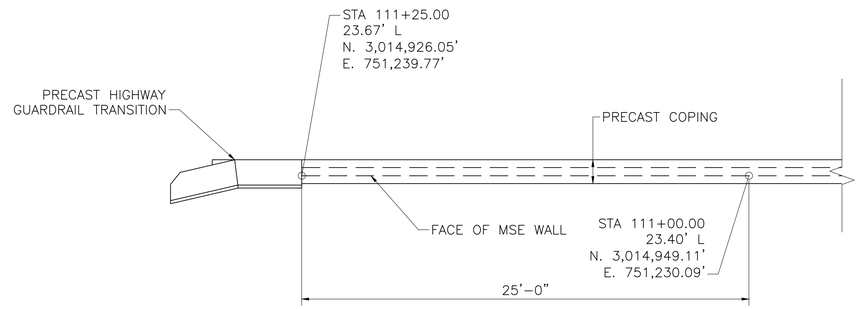

SOUTH MSE WALL PARTIAL PLAN

SCALE: ¼" = 1'–0"

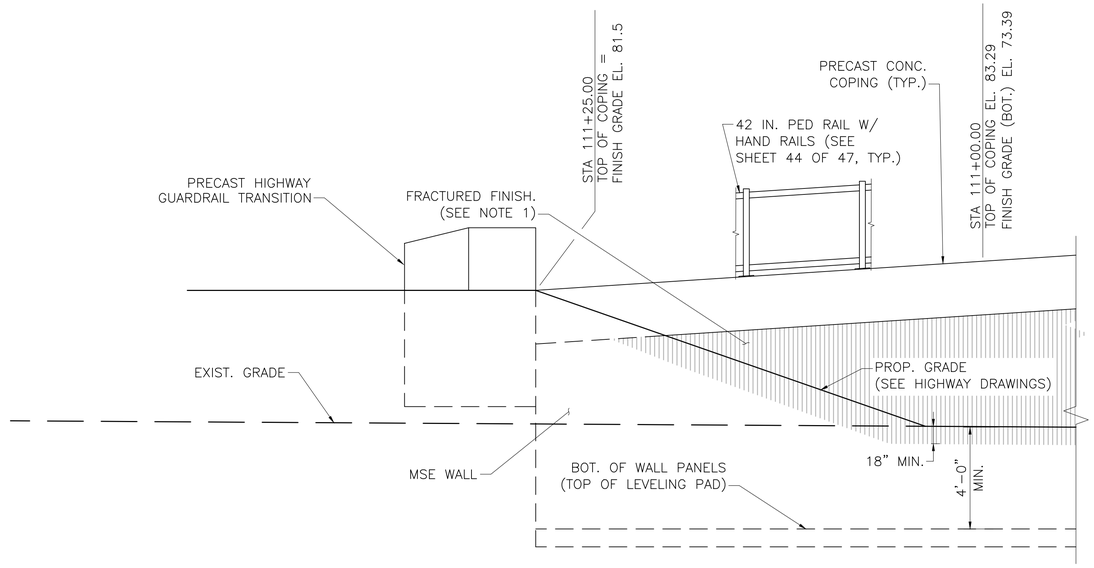

SOUTH MSE WALL PARTIAL ELEVATION

SCALE: ¼" = 1'–0"

MONTH DD, YYYY	ISSUED FOR CONSTRUCTION
DATE	DESCRIPTION
USE ONLY PRINTS OF LATEST DATE	

PROGRESS PRINT - NOT FOR CONSTRUCTION

\\FHBIGBL\PROJ\WAT-TE\08363.27\CAD\TE\604996\BR\DWG\604996_BR(SOUTH_MSE).DWG
604996_BR(SOUTH_MSE).DWG Plotted on 3-Aug-2020 1:32 PM
Second Structural Submittal (S2) 3-August-2020

WOBURN
NEW BOSTON STREET

STATE	FED. AID PROJ. NO.	SHEET NO.	TOTAL SHEETS
MA	–	106	147
PROJECT FILE NO. 604996			

ABUTMENT DETAILS (1 OF 2)

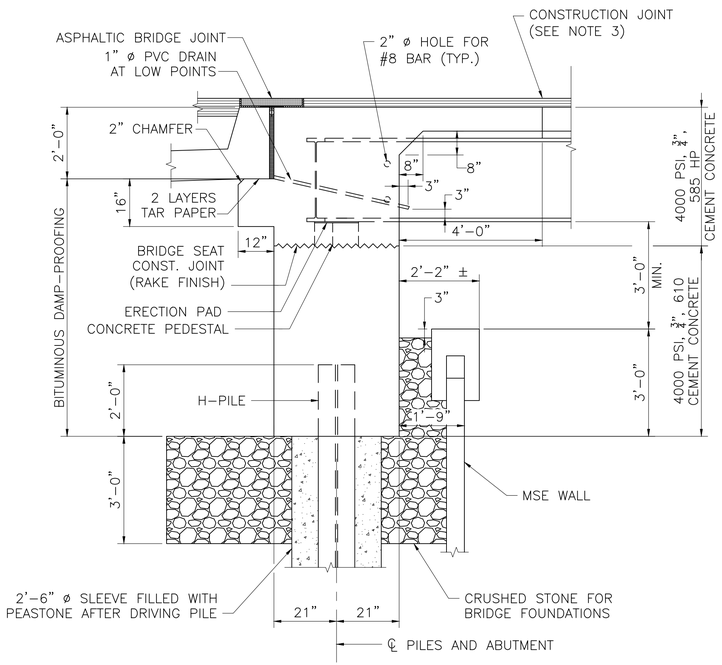

TYPICAL INTEGRAL ABUTMENT SECTION

SCALE: 1/2" = 1'-0"

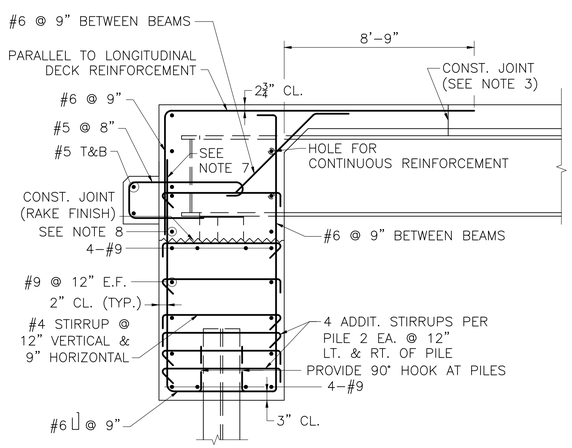

TYPICAL INTEGRAL ABUTMENT REINFORCEMENT

SCALE: 1/2" = 1'-0"

CONSTRUCTION NOTES:

1. ALL REINFORCEMENT SHALL BE COATED.
2. DECK SLAB REINFORCEMENT NOT SHOWN FOR CLARITY. CONTINUE DECK SLAB REINFORCEMENT TO BACK OF ABUTMENT.
3. THE CONTRACTOR SHALL FOLLOW THE DECK PLACEMENT SEQUENCE AS SHOWN ON THESE CONSTRUCTION DRAWINGS.
4. ALL CONCRETE SHALL CONTAIN SUPERPLASTICIZER TO ENSURE ADEQUATE CONSOLIDATION.
5. BOTH ABUTMENTS SHALL BE BACKFILLED SIMULTANEOUSLY. NO MORE THAN TWO (2) FEET OF DIFFERENTIAL BACKFILL HEIGHT SHALL BE PERMITTED. BACKFILLING SHALL NOT BEGIN UNTIL THE ABUTMENT AND DECK CONSTRUCTION IS COMPLETE.
6. ALL UNPAINTED WEATHERING STEEL EMBEDDED IN THE ABUTMENT AND WITHIN 12" OF THE ABUTMENT FACE SHALL BE PAINTED. THE FINISH COAT COLOR SHALL MATCH COLOR CHIP NO. 30045 OF FEDERAL STANDARD 595B.
7. MECHANICAL REINFORCING BAR SPLICERS SHALL BE INSTALLED TO MAKE THIS REINFORCEMENT CONTINUOUS.
8. MECHANICAL REINFORCING BAR SPLICERS SHALL BE INSTALLED AT STAGE CONSTRUCTION JOINTS FOR ALL TRANSVERSE REINFORCEMENT.
9. THE TOP OF THE APPROACH SLAB SHALL MATCH THE TOP OF THE ABUTMENT DIAPHRAGM.

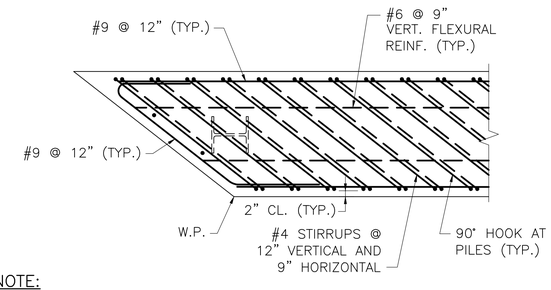

NOTE:
SECTION IS TAKEN BELOW CAP TOP LONGITUDINAL REINFORCEMENT AT BRIDGE SEAT CONSTRUCTION JOINT.

HORIZONTAL SECTION – SKEWED ABUTMENT ENDS

SCALE: 1/2" = 1'-0"

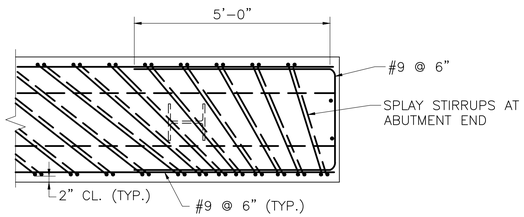

NOTE:
SECTION IS TAKEN BELOW CAP TOP LONGITUDINAL REINFORCEMENT AT BRIDGE SEAT CONSTRUCTION JOINT.

HORIZONTAL SECTION – SQUARE ABUTMENT ENDS

SCALE: 1/2" = 1'-0"

MONTH DD, YYYY	ISSUED FOR CONSTRUCTION
DATE	DESCRIPTION
USE ONLY PRINTS OF LATEST DATE	

SHEET 25 OF 47 SHEETS BRIDGE NO. W-43-017 (BB4)

PROGRESS PRINT - NOT FOR CONSTRUCTION

\\VHB\GBL\PROJ\WAT-TE\08363.27\CAD\TE604996\BR\DWG\604996_BR(ABUT_DET).DWG
604996_BR(ABUT_DET).DWG Plotted on 2-Aug-2020 8:07 PM
Second Structural Submittal (S2) 3-August-2020

WOBURN
NEW BOSTON STREET

STATE	FED. AID PROJ. NO.	SHEET NO.	TOTAL SHEETS
MA	–	107	147
PROJECT FILE NO. 604996			

ABUTMENT DETAILS (2 OF 2)

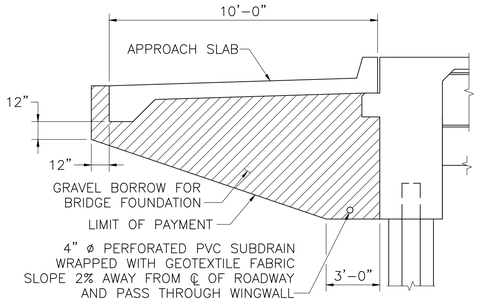

INTEGRAL ABUTMENT BACKFILL

SCALE: $\frac{1}{4}$" = 1'–0"

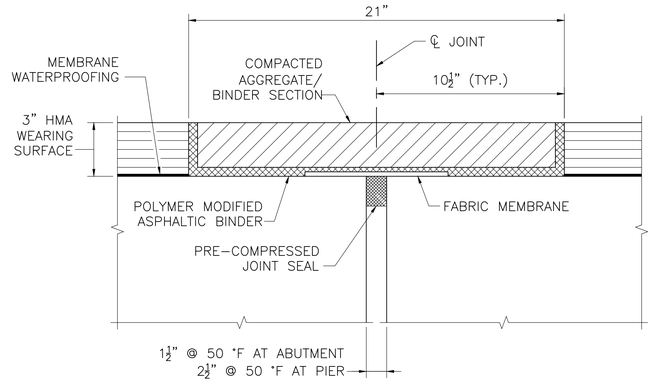

ASPHALTIC BRIDGE JOINT DETAIL

SCALE: 3" = 1'–0"

CONSTRUCTION SEQUENCE NOTES:

1. CENTER 19" WIDE STRIP OF ROOFING FELT OVER THE JOINT LOCATION.
2. PLACE WATERPROOFING MEMBRANE AND HMA WEARING SURFACE UNIFORMLY ACROSS THE DECK AND JOINT LOCATIONS.
3. SAW CUT AND REMOVE THE HMA WEARING SURFACE AND MEMBRANE WATERPROOFING TO THE LIMITS REQUIRED.
4. PLACE PRE–COMPRESSED JOINT SEAL, POLYMER MODIFIED BINDER AND FABRIC MEMBRANE.
5. COAT THE SURFACES OF THE BLOCK–OUT WITH THE POLYMER MODIFIED ASPHALTIC BINDER.
6. PLACE COMPACTED AGGREGATE/BINDER TO FILL ALL VOIDS AND OBTAIN A FINAL AND EVEN SURFACE WITH THE ADJACENT WEARING SURFACE.
7. IT IS NOT NECESSARY TO CONSTRUCT THE JOINT AT MEAN TEMPERATURE, HOWEVER, THE MANUFACTURER SHOULD BE CONSULTED FOR INSTALLATION GUIDELINES FOR EXTREME CLIMATE CONDITIONS.

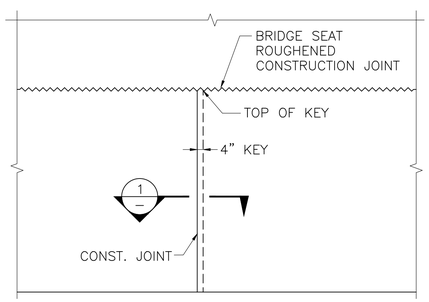

ELEVATION OF ABUTMENT

SCALE: $\frac{1}{4}$" = 1'–0"

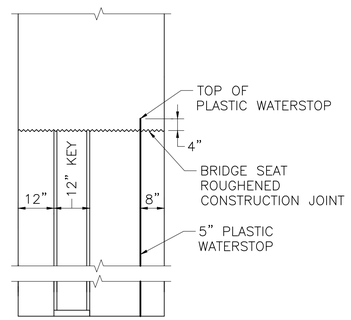

NOTE:
REINFORCEMENT SHALL BE CONTINUOUS THRU CONSTRUCTION JOINTS.

VERTICAL SECTION THRU CONSTRUCTION JOINT

SCALE: $\frac{1}{2}$" = 1'–0"

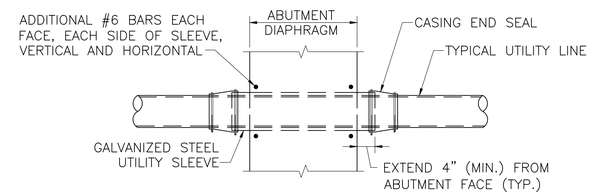

NOTE:

1. UTILITY SLEEVES SHALL BE STEEL PIPE CONFORMING TO ASTM A–53, TYPE S, GRADE B, STANDARD WEIGHT, PLAIN ENDS, HOT–DIP GALVANIZED AND SHALL BE SET IN THE FORMS PRIOR TO PLACING ABUTMENT DIAPHRAGM CONCRETE.

UTILITY DETAILS AT ABUTMENT – LONGITUDINAL SECTION

SCALE: $\frac{1}{2}$" = 1'–0"

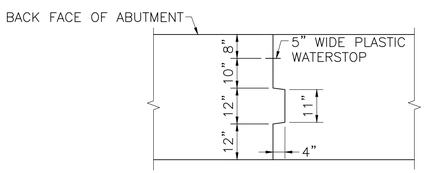

SECTION 1

SCALE: $\frac{1}{2}$" = 1'–0"

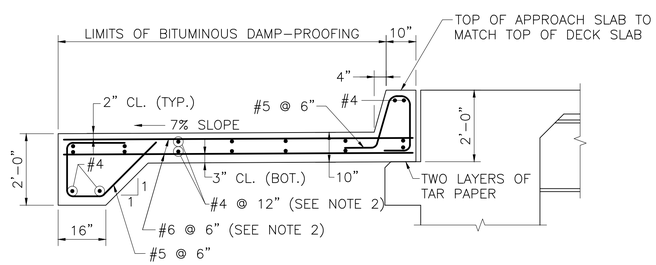

NOTES:

1. APPROACH SLAB TO BE EITHER 4000 PSI, $\frac{3}{4}$ IN, 610 CEMENT CONCRETE OR 4000 PSI, $1\frac{1}{2}$ IN, 565 CEMENT CONCRETE.
2. PLACE LONGITUDINAL REINFORCEMENT PERPENDICULAR TO ABUTMENT PLACE TRANSVERSE REINFORCEMENT PARALLEL TO ABUTMENT.

APPROACH SLAB DETAILS

SCALE: $\frac{1}{2}$" = 1'–0"

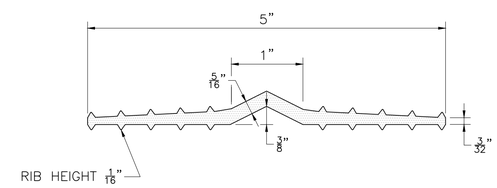

5" WATERSTOP

NOT TO SCALE

MONTH DD, YYYY	ISSUED FOR CONSTRUCTION
DATE	DESCRIPTION
USE ONLY PRINTS OF LATEST DATE	

SHEET 26 OF 47 SHEETS BRIDGE NO. W–43–017 (BB4)

PROGRESS PRINT - NOT FOR CONSTRUCTION

\\WHBGBL\PROJ\WAT-TE\08363.27\CAD\TE604996\BR\DWG\604996_BR(ABUT_DET).DWG
604996_BR(ABUT_DET).DWG Plotted on 2-Aug-2020 8:07 PM
Second Structural Submittal (S2) 3-August-2020

WOBURN
NEW BOSTON STREET

STATE	FED. AID PROJ. NO.	SHEET NO.	TOTAL SHEETS
MA	–	108	147
PROJECT FILE NO. 604996			

MSE WALL DETAILS

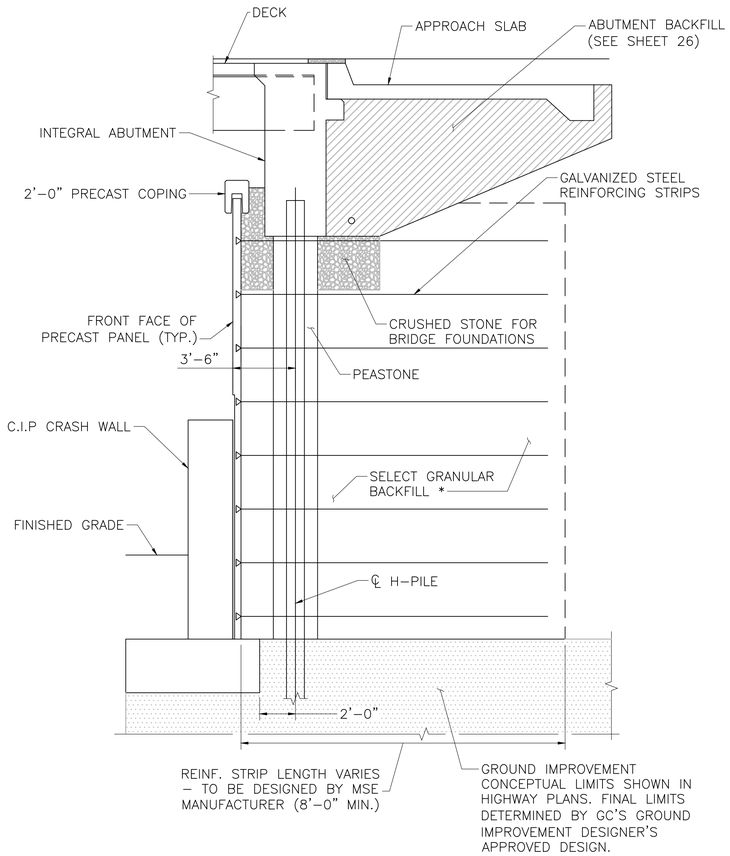

NOTE: SOUTH ABUTMENT SHOWN, NORTH ABUTMENT SIMILAR (WITHOUT THE CRASH WALL).

TYPICAL SECTION THROUGH SOUTH ABUTMENT

SCALE: $\frac{1}{4}$" = 1'–0"

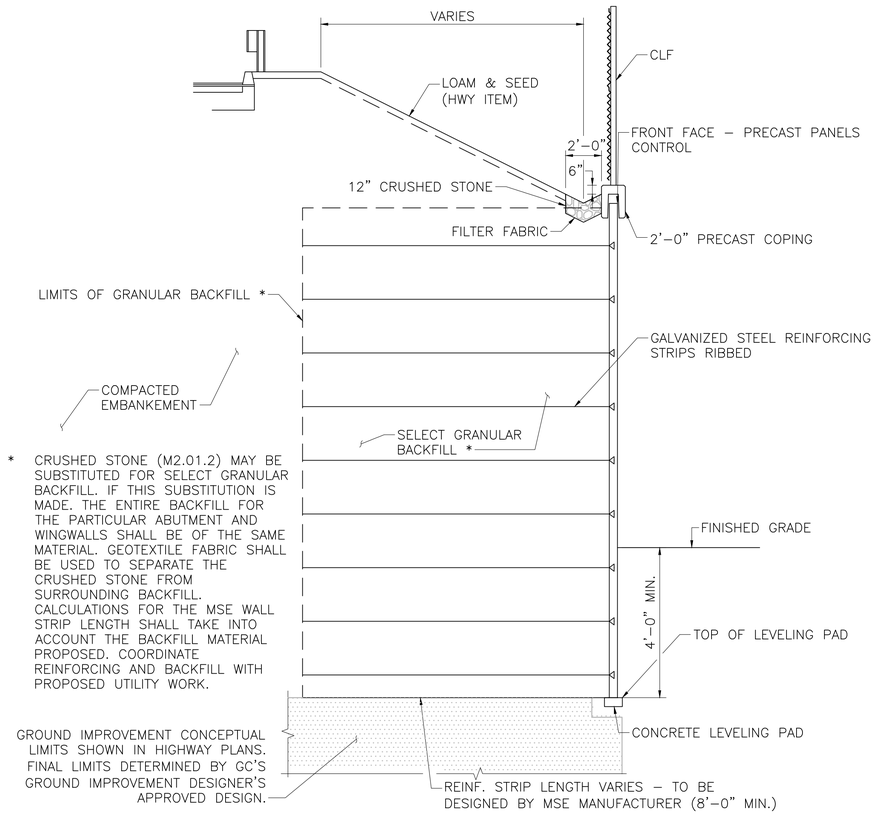

* CRUSHED STONE (M2.01.2) MAY BE SUBSTITUTED FOR SELECT GRANULAR BACKFILL. IF THIS SUBSTITUTION IS MADE. THE ENTIRE BACKFILL FOR THE PARTICULAR ABUTMENT AND WINGWALLS SHALL BE OF THE SAME MATERIAL. GEOTEXTILE FABRIC SHALL BE USED TO SEPARATE THE CRUSHED STONE FROM SURROUNDING BACKFILL. CALCULATIONS FOR THE MSE WALL STRIP LENGTH SHALL TAKE INTO ACCOUNT THE BACKFILL MATERIAL PROPOSED. COORDINATE REINFORCING AND BACKFILL WITH PROPOSED UTILITY WORK.

TYPICAL SECTION AT WINGWALLS

SCALE: $\frac{1}{4}$" = 1'–0"

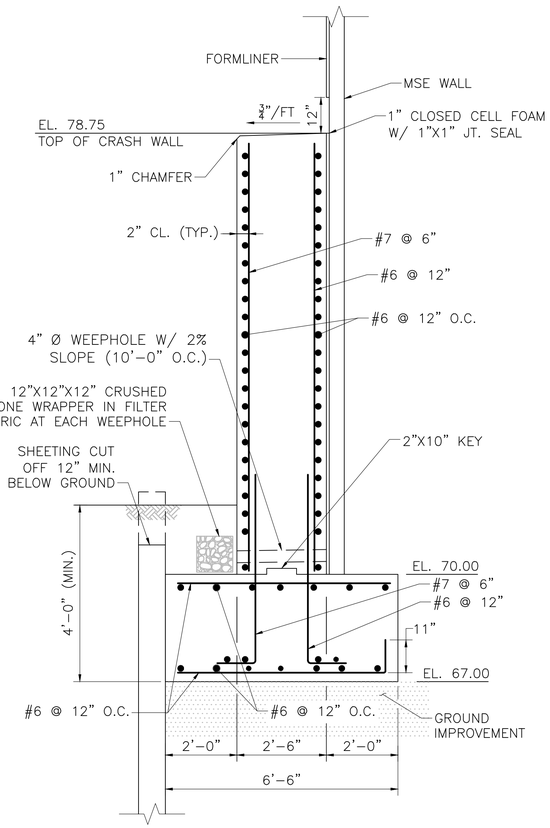

CRASH WALL AND MSE WALL FOUNDATION NOTES:

1. THE CRASH WALL FACTORED BEARING PRESSURE = 2 KSF AS PER AASHTO LRFD BRIDGE DESIGN SPECIFICATIONS EXTREME EVENT LIMIT STATE.
2. THE CRASH WALL FACTORED BEARING RESISTANCE = 10.8 KSF. FACTORED BEARING RESISTANCE IS THE PRODUCT OF THE NOMINAL BEARING RESISTANCE AND A RESISTANCE FACTOR OF 0.9 (DESIGNED FOR EXTREME EVENT LIMIT STATE).
3. THE MSE WALL BEARING PRESSURE SHALL BE DETERMINED BY THE WALL MANUFACTURER/DESIGNER.
4. THE MSE WALL FACTORED BEARING RESISTANCE – 5.5 KSF. THE FACTORED BEARING RESISTANCE IS THE PRODUCT OF THE NOMINAL BEARING RESISTANCE AND A RESISTANCE FACTOR OF 0.65 (STRENGTH LIMIT STATE).
5. SEE GEOTECHNICAL REPORT AND SPECIAL PROVISIONS FOR GROUND IMPROVEMENT REQUIREMENTS.

CRASH WALL SECTION

SCALE: $\frac{1}{2}$" = 1'–0"

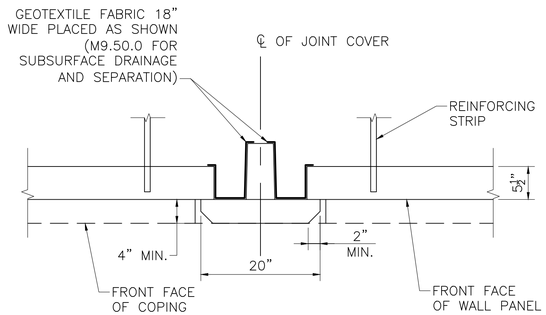

VERTICAL RELIEF JOINT AT MSE WALLS

N.T.S.

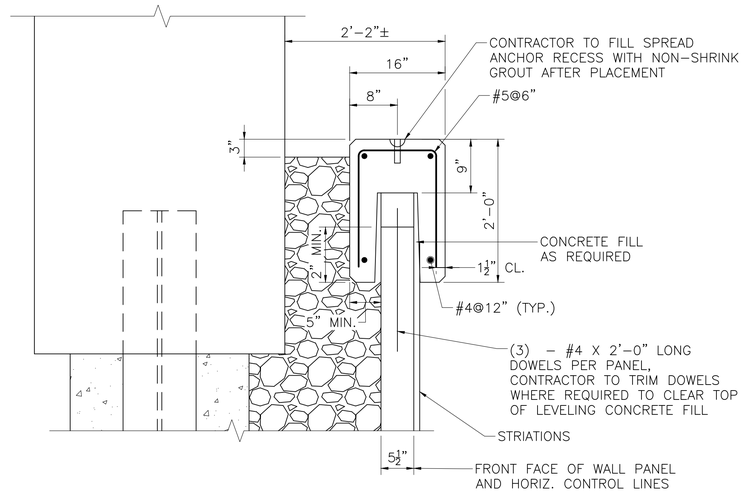

NOTES:

1. STANDARD COPING UNIT IS 10 FEET LONG WITH SQUARE ENDS.
2. CHAIN LINK FENCE NOT SHOWN FOR CLARITY.

PRECAST COPING SECTION AT FACE OF ABUTMENT

SCALE: 1" = 1'–0"

MONTH DD, YYYY	ISSUED FOR CONSTRUCTION
DATE	DESCRIPTION
USE ONLY PRINTS OF LATEST DATE	

SHEET 27 OF 47 SHEETS BRIDGE NO. W–43–017 (BB4)

PROGRESS PRINT - NOT FOR CONSTRUCTION

\\VHB\GBL\PROJ\WAT-TE\08363.27\CAD\TE\604996\BR\DWG\604996_BR(MSE_DET).DWG
604996_BR(MSE_DET).DWG Plotted on 3-Aug-2020 1:32 PM
Second Structural Submittal (S2) 3-August-2020

WOBURN
NEW BOSTON STREET

STATE	FED. AID PROJ. NO.	SHEET NO.	TOTAL SHEETS
MA	–	109	147
PROJECT FILE NO. 604996			

PIER 1 PLAN AND ELEVATION

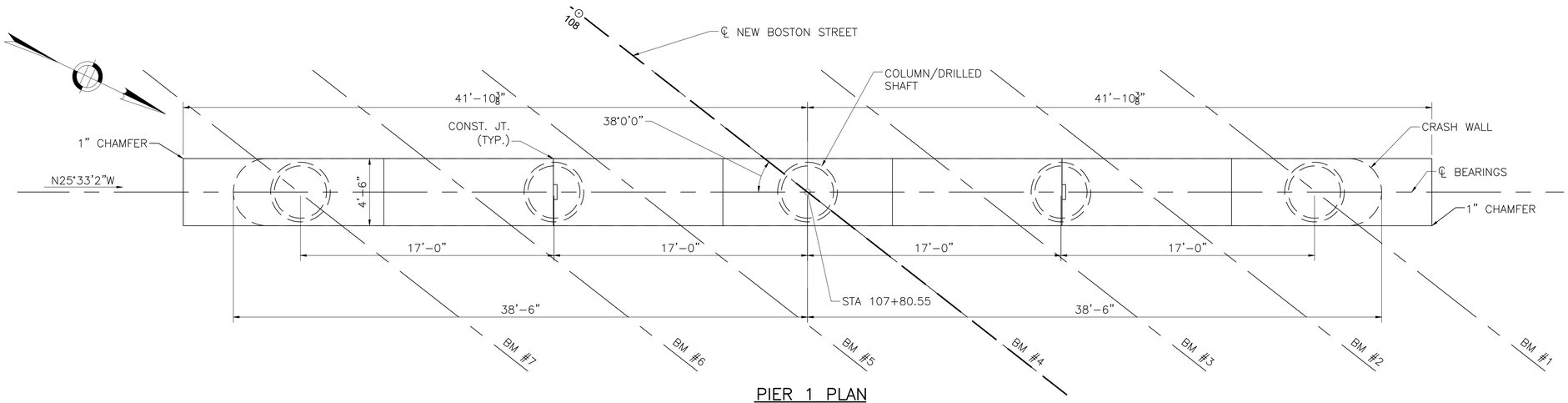

PIER 1 PLAN
SCALE: 1/4" = 1'–0"

NOTES:

1. STEEL SHEETING AT CRASH WALL OMITTED FOR CLARITY.

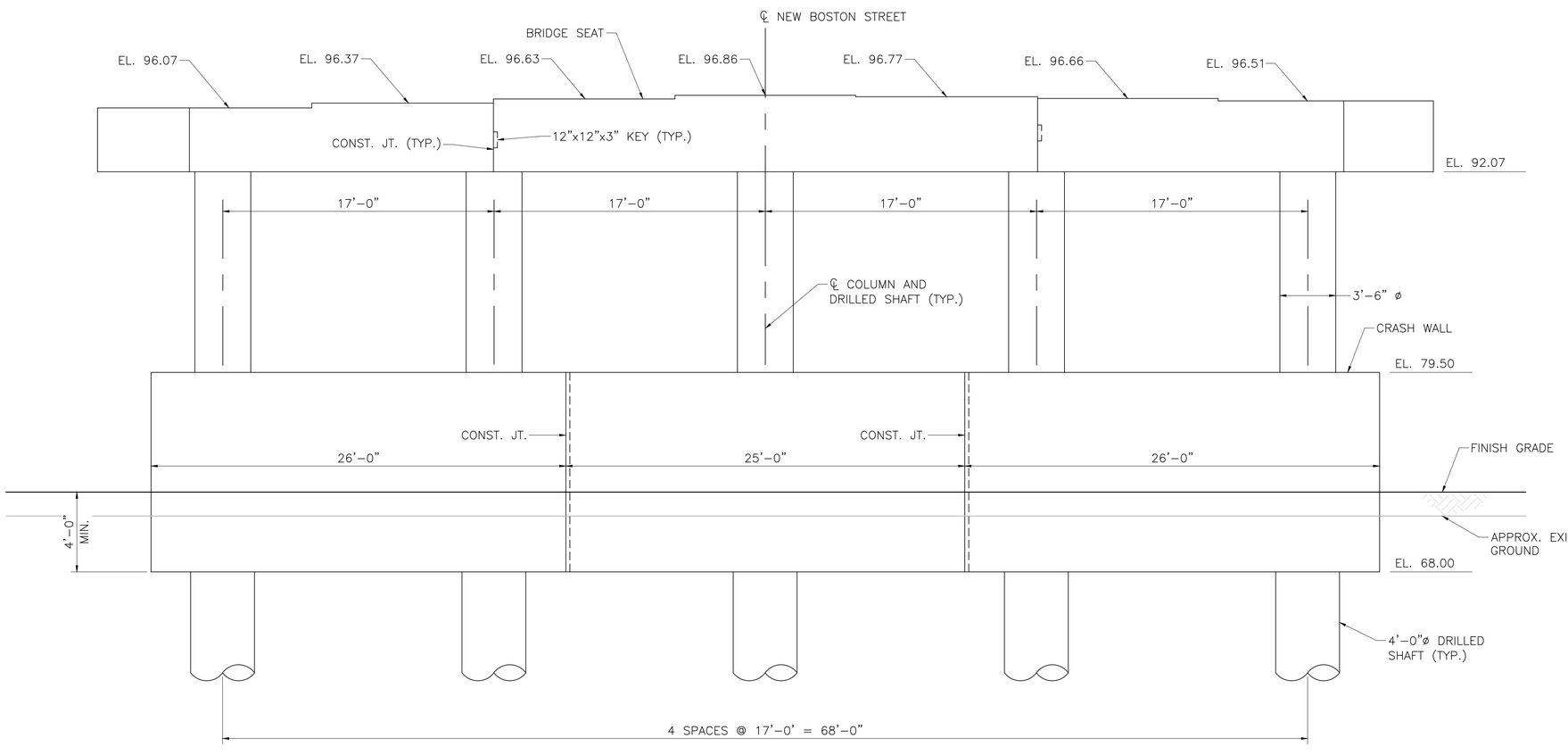

PIER 1 ELEVATION
SCALE: 1/4" = 1'–0"

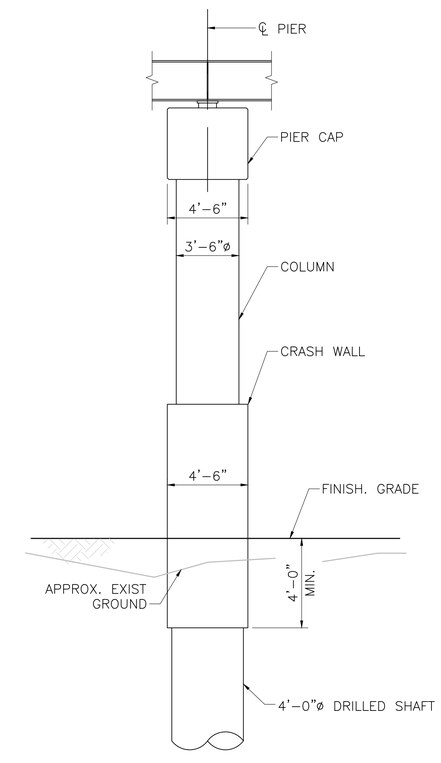

TYPICAL PIER SECTION
SCALE: 1/4" = 1'–0"

MONTH DD, YYYY	ISSUED FOR CONSTRUCTION
DATE	DESCRIPTION
USE ONLY PRINTS OF LATEST DATE	

SHEET 28 OF 47 SHEETS BRIDGE NO. W–43–017 (BB4)

PROGRESS PRINT - NOT FOR CONSTRUCTION

\\VHBIGBL\PROJ\WAT-TE\08363.27\CADTE\604996\BR\DWG\604996_BR(SOUTH_PIER).DWG

604996_BR(SOUTH_PIER).DWG Plotted on 2-Aug-2020 8:08 PM

Second Structural Submittal (S2) 3-August-2020

WOBURN
NEW BOSTON STREET

STATE	FED. AID PROJ. NO.	SHEET NO.	TOTAL SHEETS
MA	–	110	147
PROJECT FILE NO. 604996			

PIER 2 PLAN AND ELEVATION

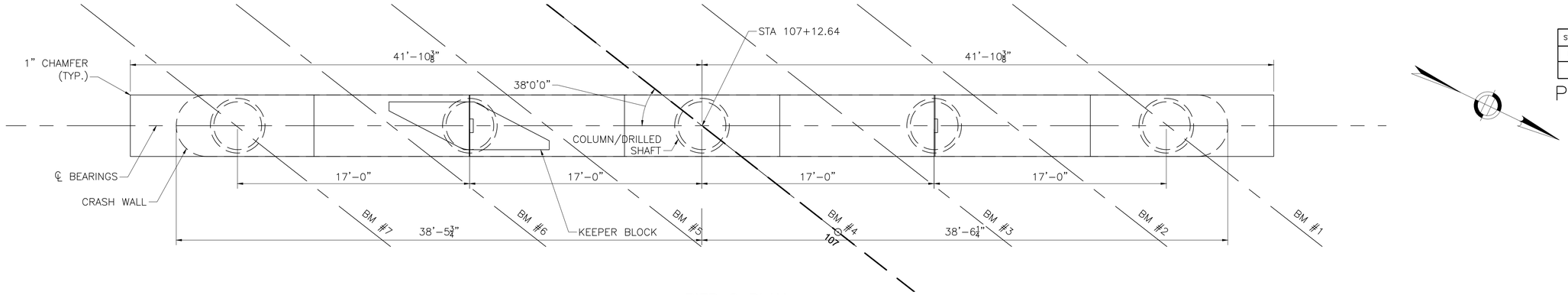

PIER 2 PLAN
SCALE: ¼" = 1'–0"

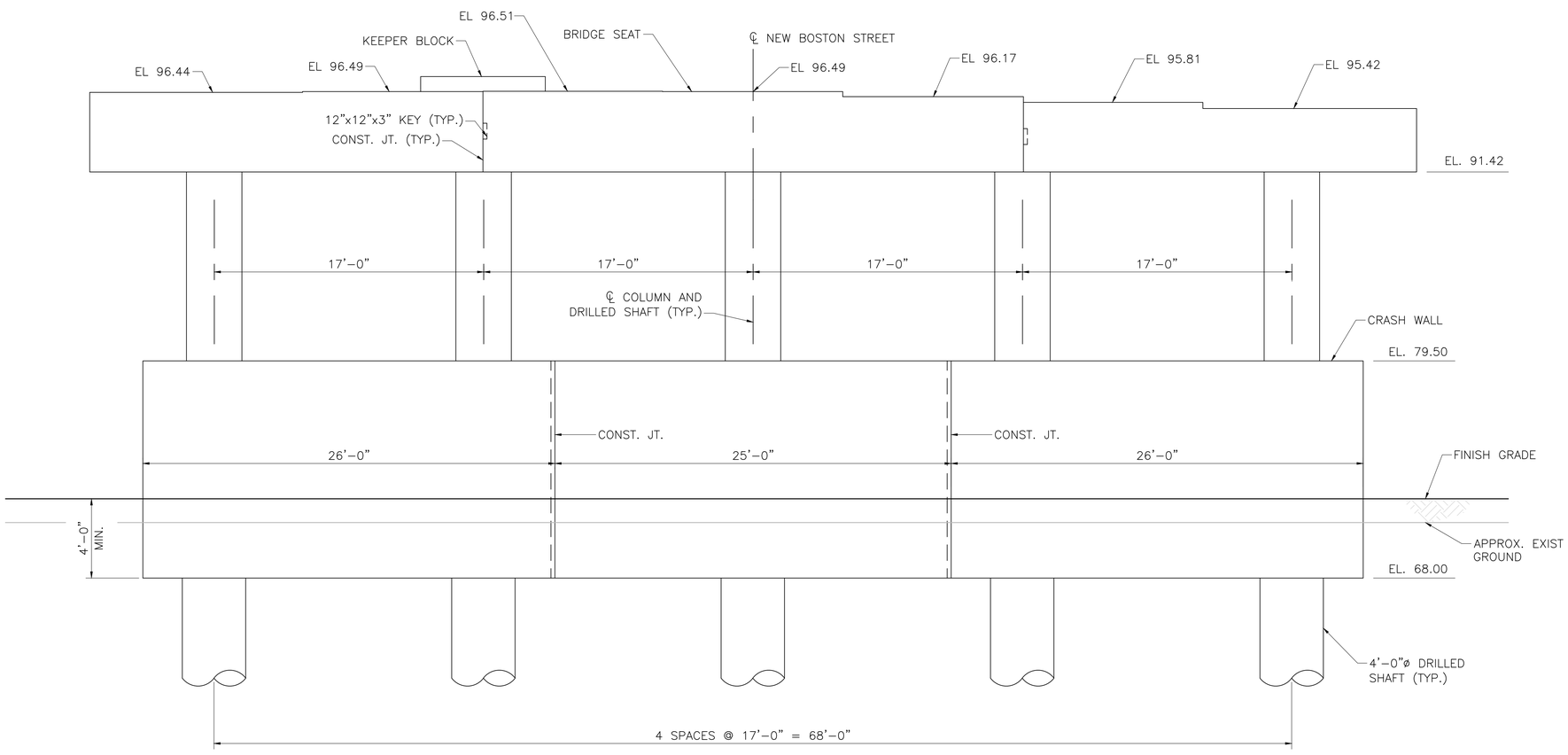

PIER 2 ELEVATION
SCALE: ¼" = 1'–0"

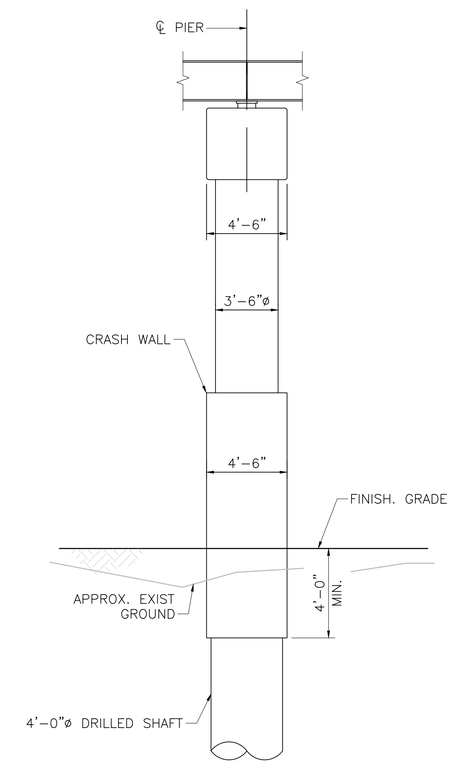

TYPICAL PIER SECTION
SCALE: ¼" = 1'–0"

MONTH DD, YYYY	ISSUED FOR CONSTRUCTION
DATE	DESCRIPTION
USE ONLY PRINTS OF LATEST DATE	

PROGRESS PRINT - NOT FOR CONSTRUCTION

\\VHB\GBL\PROJ\WAT-TE\08363.27\CADTE\604996\BR\DWG\604996_BR(NORTH_PIER).DWG
604996_BR(NORTH_PIER).DWG Plotted on 2-Aug-2020 8:09 PM
Second Structural Submittal (S2) 3-August-2020

WOBURN
NEW BOSTON STREET

STATE	FED. AID PROJ. NO.	SHEET NO.	TOTAL SHEETS
MA	–	111	147
PROJECT FILE NO. 604996			

PIER DETAILS (1 OF 2)

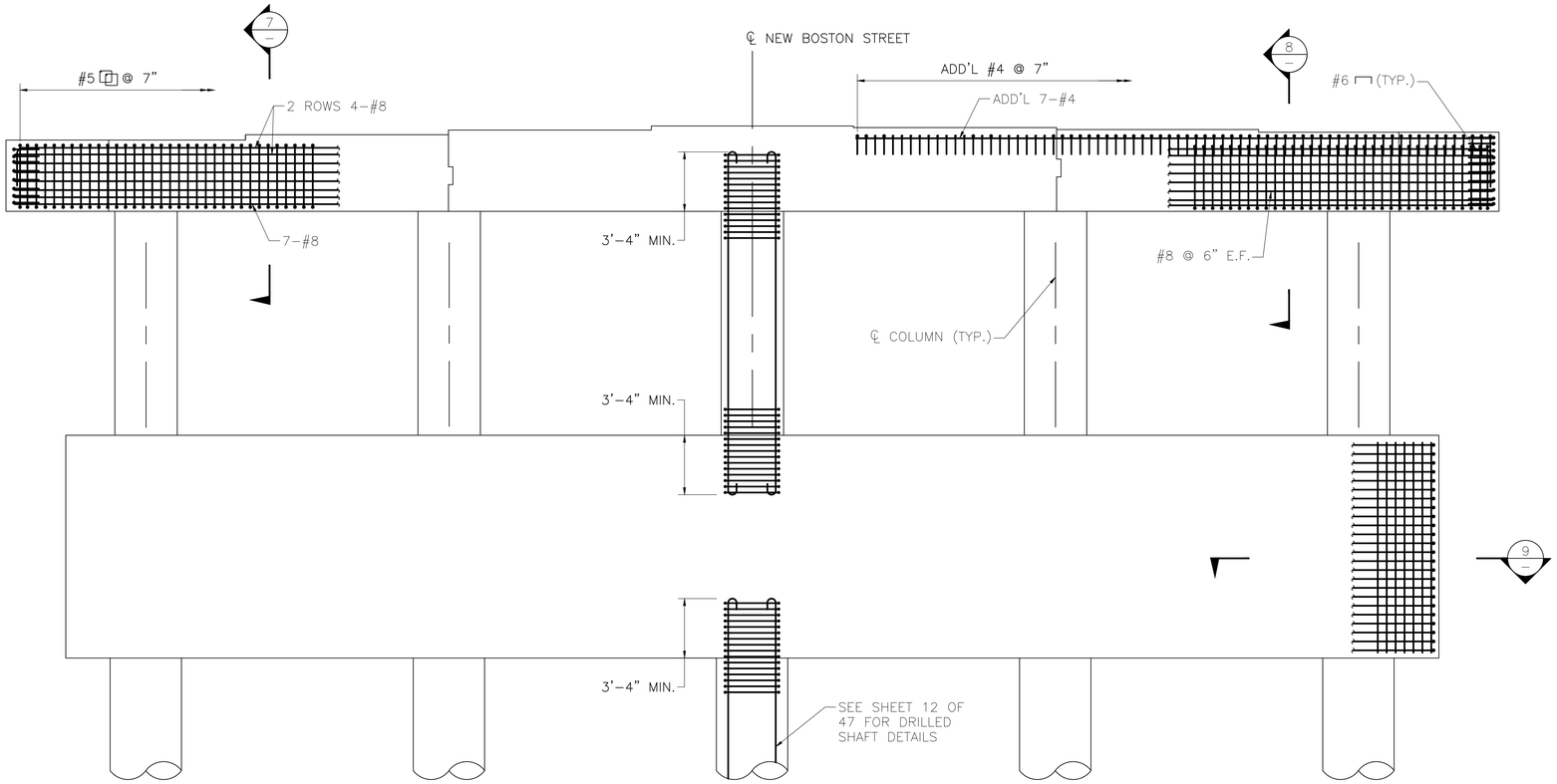

TYPICAL PIER ELEVATION
SCALE: $\frac{1}{4}$" = 1'–0"

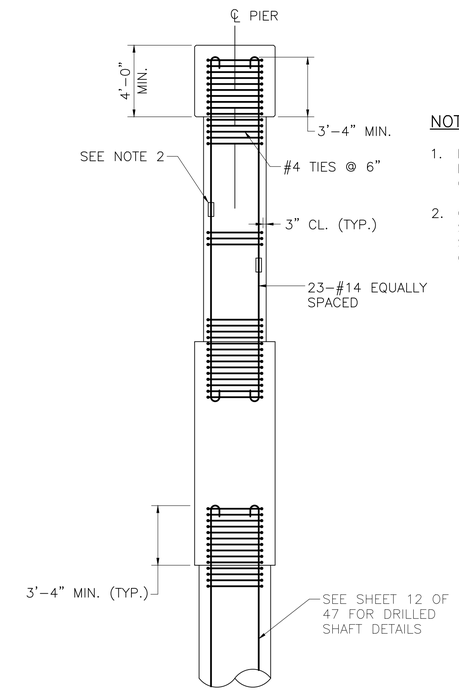

TYPICAL REINFORCEMENT
SCALE: $\frac{1}{4}$" = 1'–0"

NOTES:

1. PIER CAP AND CRASH WALL REINFORCEMENT OMITTED FOR CLARITY.
2. OPTIONAL STAGGERED MECH. SPLICERS CONFORMING TO MASSDOT SPECIFICATIONS ALLOWED WITHIN CENTER HALF OF THE COLUMN.

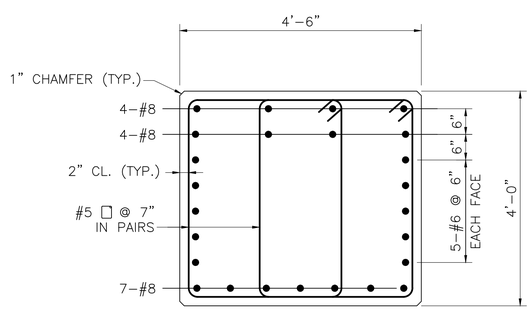

SECTION 7
SCALE: $\frac{3}{4}$" = 1'–0"

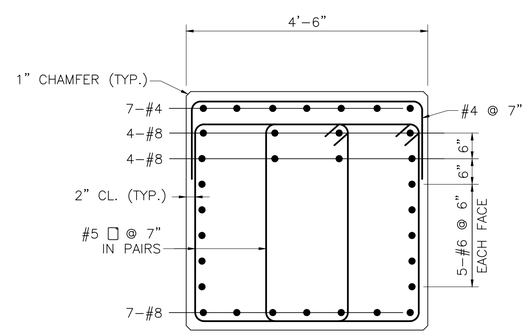

SECTION 8
SCALE: $\frac{3}{4}$" = 1'–0"

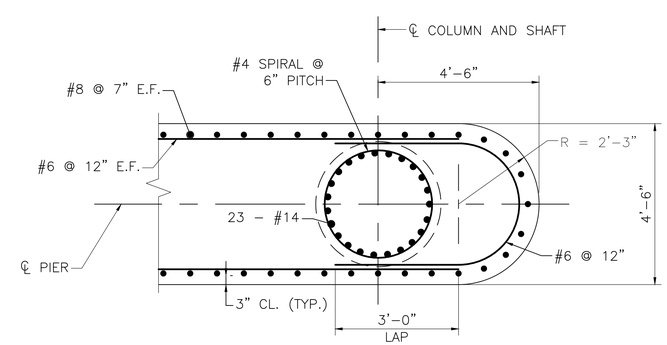

SECTION 9
SCALE: $\frac{1}{2}$" = 1'–0"

MONTH DD, YYYY	ISSUED FOR CONSTRUCTION
DATE	DESCRIPTION
USE ONLY PRINTS OF LATEST DATE	

SHEET 30 OF 47 SHEETS BRIDGE NO. W–43–017 (BB4)

PROGRESS PRINT - NOT FOR CONSTRUCTION

\\FHBGBL\PROJ\WAT-TE\08363.27\CAD\TE604996\BR\DWG\604996_BR(SOUTH_PIER).DWG

604996_BR(SOUTH_PIER).DWG Plotted on 2-Aug-2020 8:11 PM

Second Structural Submittal (S2) 3-August-2020

WOBURN
NEW BOSTON STREET

STATE	FED. AID PROJ. NO.	SHEET NO.	TOTAL SHEETS
MA	–	112	147
PROJECT FILE NO. 604996			

PIER DETAILS (2 OF 2)

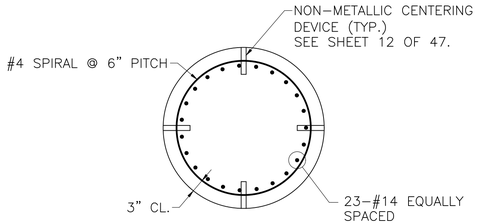

NOTE:

NON–METALLIC CENTERING DEVICES TO BE PLACED AT 1/4 POINTS IN COLUMN. DETAILS OF ALTERNATIVE CENTERING DEVICES MUST BE SUBMITTED TO AND APPROVED BY THE DIRECTOR OF BRIDGES AND STRUCTURES.

TYPICAL COLUMN REINFORCEMENT

SCALE: $\frac{3}{4}$" = 1'–0"

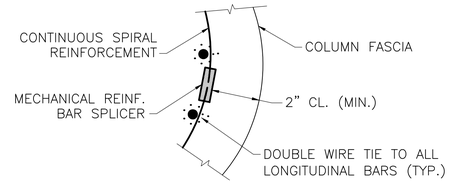

SPIRAL REINFORCEMENT SPLICE DETAIL

NOT TO SCALE

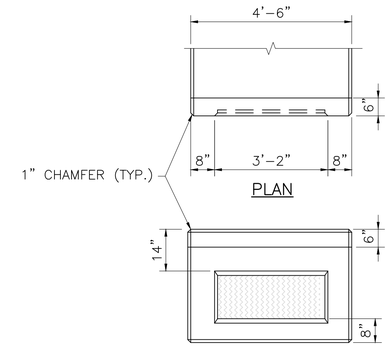

PLAN

ELEVATION

PIER CAP ENDS

SCALE: $\frac{1}{2}$" = 1'–0"

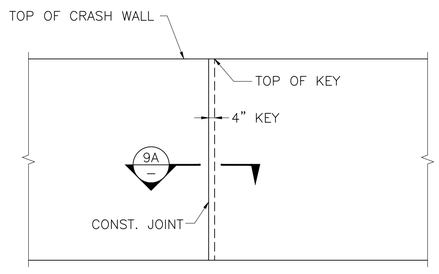

ELEVATION OF CRASH WALL

SCALE: $\frac{1}{4}$" = 1'–0"

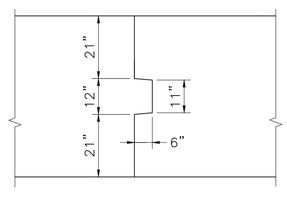

SECTION 9A

SCALE: $\frac{1}{2}$" = 1'–0"

MONTH DD, YYYY	ISSUED FOR CONSTRUCTION
DATE	DESCRIPTION
USE ONLY PRINTS OF LATEST DATE	

PROGRESS PRINT - NOT FOR CONSTRUCTION

\\VHB\GBL\PROJ\WAT-TE\08363.27\CADTE\604996\BRDWG\604996_BR(NORTH_PIER).DWG
604996_BR(NORTH_PIER).DWG Plotted on 2-Aug-2020 8:12 PM
Second Structural Submittal (S2) 3-August-2020

WOBURN
NEW BOSTON STREET

STATE	FED. AID PROJ. NO.	SHEET NO.	TOTAL SHEETS
MA	–	113	147
PROJECT FILE NO. 604996			

KEEPER BLOCK DETAILS

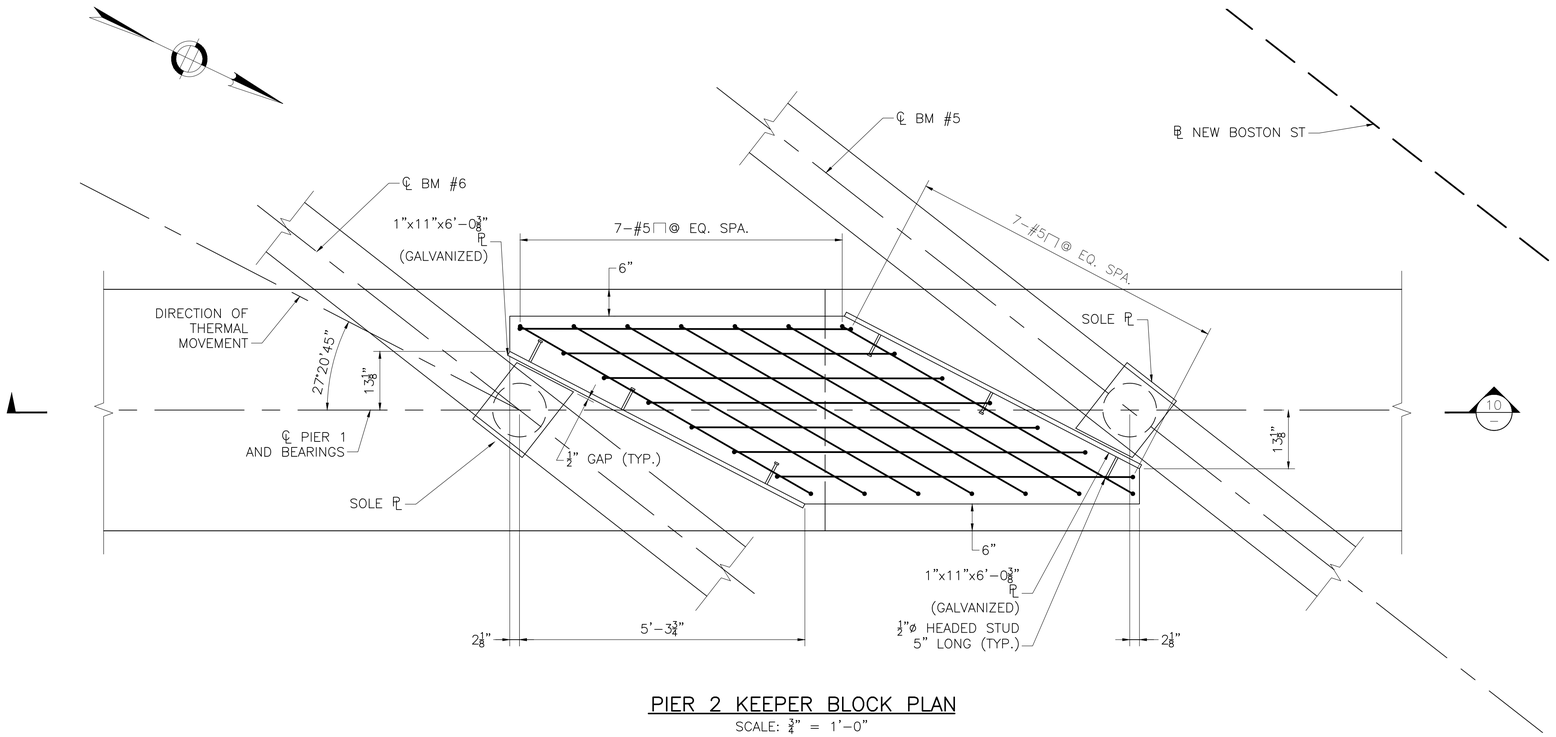

PIER 2 KEEPER BLOCK PLAN
SCALE: ¾" = 1'-0"

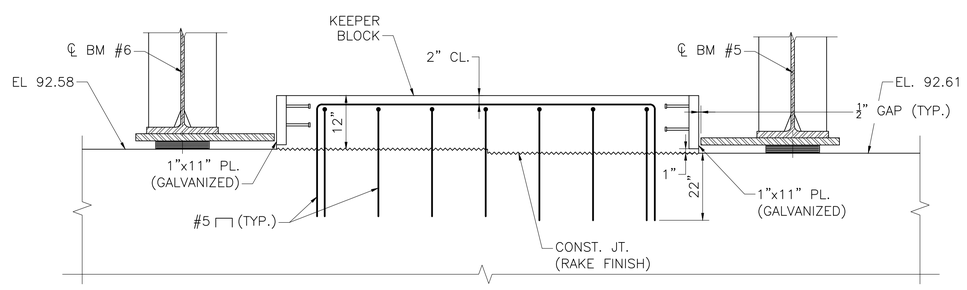

SECTION 10
SCALE: ¾" = 1'-0"

MONTH DD, YYYY	ISSUED FOR CONSTRUCTION
DATE	DESCRIPTION
USE ONLY PRINTS OF LATEST DATE	

SHEET 32 OF 47 SHEETS BRIDGE NO. W-43-017 (BB4)

PROGRESS PRINT - NOT FOR CONSTRUCTION

\\WHBGBL\PROJ\WAT-TE\08363.27\CAD\TE\604996\BR\DWG\604996_BR(KEEPER_BL).DWG

604996_BR(KEEPER_BL).DWG Plotted on 2-Aug-2020 8:12 PM

Second Structural Submittal (S2) 3-August-2020

WOBURN
NEW BOSTON STREET

STATE	FED. AID PROJ. NO.	SHEET NO.	TOTAL SHEETS
MA	–	114	147
PROJECT FILE NO. 604996			

FRAMING PLAN

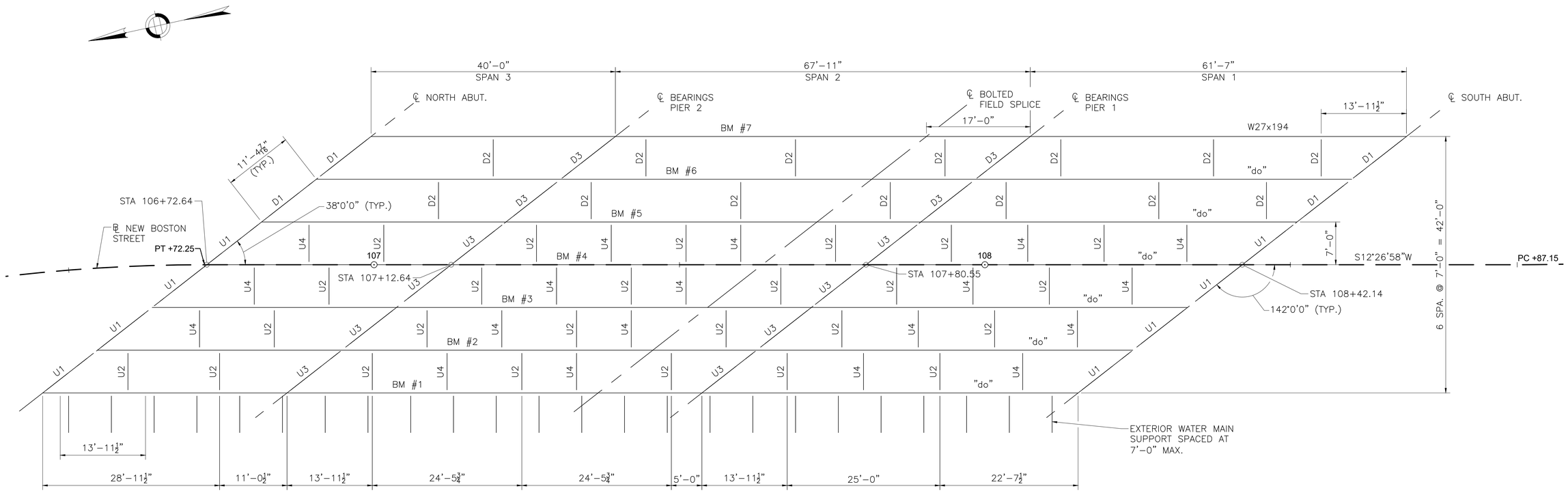

FRAMING PLAN

SCALE: ⅛" = 1'–0"

NOTES:

1. D1, D2, D3 = MC18x42.7
   U1, U2, U3 = W21x73
   U4 = W4x13
2. SEE SEPARATE SHEET FOR DIAPHRAGM DETAILS.
3. THE MAIN LOAD CARRYING MEMBERS ARE BM #1 THRU BM #7, D1 THRU D3, AND U1 THRU U3.
4. ALL STEEL SHALL CONFORM TO AASHTO M270 GRADE 50W.

MONTH DD, YYYY	ISSUED FOR CONSTRUCTION
DATE	DESCRIPTION
USE ONLY PRINTS OF LATEST DATE	

PROGRESS PRINT - NOT FOR CONSTRUCTION

\\VHBGBL\PROJ\WAT-TE\98363.27\CAD\TE\604996\BR\DWG\604996_BR(FRAMING).DWG
604996_BR(FRAMING).DWG Plotted on 2-Aug-2020 8:12 PM
Second Structural Submittal (S2) 3-August-2020

WOBURN
NEW BOSTON STREET

STATE	FED. AID PROJ. NO.	SHEET NO.	TOTAL SHEETS
MA	–	115	147
PROJECT FILE NO. 604996			

BEAM DETAILS

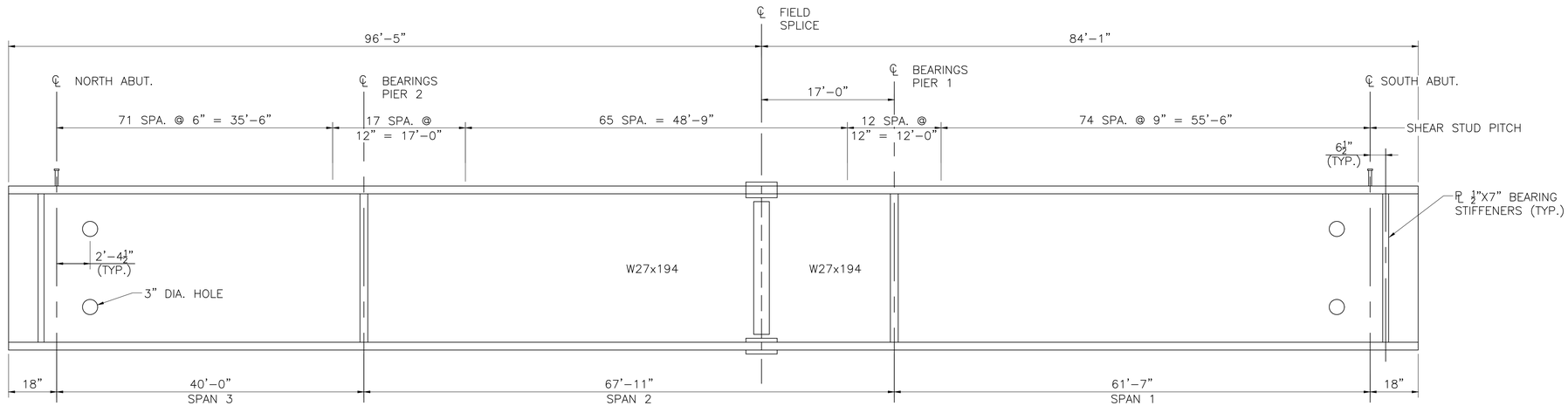

GIRDER ELEVATION

NOT TO SCALE

NOTES:

1. ALL BEARING STIFFENERS SHALL BE PLUMB.
2. END OF BEAMS SHALL BE FABRICATED SO THAT UNDER FULL DEAD LOAD THE ENDS WILL BE PLUMB.
3. CAMBER IS MEASURED FROM A STRAIGHT REFERENCE LINE THAT RUNS FROM THE TOP OF STRINGER AT CL OF THE DOWNSTATION SUPPORT TO TOP OF THE STRINGER AT CL OF THE UPSTATION SUPPORT IN EACH SPAN.
4. ALL VALUES OF CAMBER DISPLAYED IN INCHES.
5. SEE CLIP DETAIL ON SHEET 35 OF 47.
6. SEE SHEETS 35 AND 36 OF 47 FOR DIAPHRAGM AND STUD CONNECTOR DETAILS.

BEAM CAMBER TABLE

BM. NO.		N. ABUT.	SPAN 3									PIER 2	SPAN 2									PIER 1	SPAN 1									S. ABUT
			0.1L	0.2L	0.3L	0.4L	0.5L	0.6L	0.7L	0.8L	0.9L		0.1L	0.2L	0.3L	0.4L	0.5L	0.6L	0.7L	0.8L	0.9L		0.1L	0.2L	0.3L	0.4L	0.5L	0.6L	0.7L	0.8L	0.9L	
(EXT.) BM 1	STEEL DL DEFLECTION	0	0.00	0.01	0.01	0.01	0.01	0.00	0.00	0.00	0.00	0	0.02	0.05	0.07	0.08	0.09	0.09	0.07	0.05	0.01	0	0.01	0.04	0.07	0.09	0.10	0.12	0.11	0.09	0.05	0
	CONC. DL DEFLECTION	0	0.02	0.03	0.03	0.03	0.03	0.02	0.00	-0.01	-0.01	0	0.06	0.17	0.23	0.27	0.29	0.29	0.24	0.16	0.05	0	0.04	0.14	0.23	0.30	0.35	0.41	0.39	0.30	0.17	0
	S.D.L. DEFLECTION	0	0.01	0.02	0.02	0.02	0.02	0.01	0.00	-0.01	0.00	0	0.05	0.13	0.18	0.21	0.23	0.23	0.19	0.13	0.04	0	0.03	0.10	0.17	0.21	0.26	0.30	0.29	0.22	0.13	0
	VERT. CURVE CAMBER	0	0.03	0.05	0.06	0.07	0.08	0.07	0.06	0.05	0.03	0	0.08	0.15	0.19	0.22	0.23	0.22	0.19	0.15	0.08	0	0.07	0.12	0.16	0.18	0.19	0.18	0.16	0.12	0.07	0
	ADDITIONAL CAMBER	0	0.00	0.00	0.00	0.00	0.00	0.00	0.00	0.00	0.00	0	0.00	0.00	0.00	0.00	0.00	0.00	0.00	0.00	0.00	0	0.00	0.00	0.00	0.00	0.00	0.00	0.00	0.00	0.00	0
	TOTAL CAMBER	0	0.06	0.11	0.12	0.13	0.14	0.10	0.06	0.03	0.02	0	0.21	0.50	0.67	0.78	0.84	0.83	0.69	0.49	0.18	0	0.15	0.40	0.63	0.78	0.90	1.01	0.95	0.73	0.42	0
(INT.) BM 2	STEEL DL DEFLECTION	0	0.00	0.01	0.01	0.01	0.01	0.00	0.00	0.00	0.00	0	0.02	0.05	0.08	0.09	0.10	0.09	0.07	0.04	0.01	0	0.02	0.05	0.08	0.10	0.12	0.13	0.12	0.09	0.05	0
	CONC. DL DEFLECTION	0	0.02	0.03	0.04	0.03	0.03	0.01	-0.01	-0.01	-0.01	0	0.09	0.21	0.30	0.37	0.40	0.35	0.27	0.15	0.04	0	0.06	0.18	0.31	0.41	0.50	0.53	0.48	0.38	0.22	0
	S.D.L. DEFLECTION	0	0.01	0.01	0.02	0.02	0.01	0.00	0.00	-0.01	-0.01	0	0.04	0.11	0.15	0.19	0.20	0.18	0.14	0.08	0.02	0	0.03	0.09	0.16	0.21	0.25	0.26	0.24	0.19	0.11	0
	VERT. CURVE CAMBER	0	0.03	0.05	0.06	0.07	0.08	0.08	0.07	0.05	0.03	0	0.08	0.15	0.19	0.22	0.23	0.22	0.19	0.15	0.08	0	0.07	0.12	0.16	0.18	0.19	0.18	0.16	0.12	0.07	0
	ADDITIONAL CAMBER	0	0.00	0.00	0.00	0.00	0.00	0.00	0.00	0.00	0.00	0	0.00	0.00	0.00	0.00	0.00	0.00	0.00	0.00	0.00	0	0.00	0.00	0.00	0.00	0.00	0.00	0.00	0.00	0.00	0
	TOTAL CAMBER	0	0.06	0.10	0.13	0.13	0.13	0.09	0.06	0.03	0.01	0	0.23	0.52	0.72	0.87	0.93	0.84	0.67	0.42	0.15	0	0.18	0.44	0.71	0.90	1.06	1.10	1.00	0.78	0.45	0
(INT.) BM 3	STEEL DL DEFLECTION	0	0.00	0.01	0.01	0.01	0.00	0.00	0.00	0.00	0.00	0	0.02	0.05	0.08	0.09	0.10	0.09	0.07	0.04	0.01	0	0.02	0.05	0.08	0.10	0.12	0.13	0.12	0.09	0.05	0
	CONC. DL DEFLECTION	0	0.01	0.02	0.03	0.03	0.02	0.01	-0.01	-0.02	-0.01	0	0.09	0.21	0.31	0.37	0.40	0.35	0.27	0.15	0.04	0	0.06	0.19	0.31	0.41	0.50	0.53	0.48	0.38	0.22	0
	S.D.L. DEFLECTION	0	0.01	0.01	0.01	0.01	0.01	0.00	0.00	-0.01	-0.01	0	0.04	0.09	0.16	0.17	0.15	0.12	0.07	0.07	0.02	0	0.03	0.01	0.14	0.18	0.22	0.23	0.21	0.17	0.10	0
	VERT. CURVE CAMBER	0	0.03	0.05	0.07	0.08	0.08	0.08	0.07	0.05	0.03	0	0.08	0.15	0.19	0.22	0.23	0.22	0.19	0.15	0.08	0	0.07	0.12	0.16	0.18	0.19	0.18	0.16	0.12	0.07	0
	ADDITIONAL CAMBER	0	0.00	0.00	0.00	0.00	0.00	0.00	0.00	0.00	0.00	0	0.00	0.00	0.00	0.00	0.00	0.00	0.00	0.00	0.00	0	0.00	0.00	0.00	0.00	0.00	0.00	0.00	0.00	0.00	0
	TOTAL CAMBER	0	0.05	0.09	0.12	0.13	0.11	0.09	0.06	0.02	0.01	0	0.23	0.50	0.74	0.85	0.88	0.78	0.60	0.41	0.15	0	0.18	0.37	0.69	0.87	1.03	1.07	0.97	0.76	0.44	0
(INT.) BM 4	STEEL DL DEFLECTION	0	0.00	0.01	0.01	0.01	0.01	0.00	0.00	0.00	0.00	0	0.02	0.05	0.08	0.09	0.10	0.09	0.07	0.04	0.01	0	0.02	0.05	0.08	0.10	0.12	0.13	0.12	0.09	0.05	0
	CONC. DL DEFLECTION	0	0.01	0.02	0.03	0.03	0.02	0.01	-0.01	-0.01	-0.01	0	0.09	0.21	0.31	0.37	0.40	0.35	0.27	0.15	0.04	0	0.06	0.19	0.31	0.41	0.50	0.53	0.48	0.38	0.22	0
	S.D.L. DEFLECTION	0	0.01	0.01	0.01	0.01	0.01	0.00	0.00	-0.01	-0.01	0	0.04	0.09	0.13	0.16	0.17	0.15	0.11	0.06	0.02	0	0.03	0.08	0.13	0.18	0.21	0.22	0.20	0.16	0.09	0
	VERT. CURVE CAMBER	0	0.03	0.05	0.07	0.08	0.08	0.08	0.07	0.05	0.03	0	0.08	0.15	0.19	0.22	0.23	0.22	0.19	0.15	0.08	0	0.07	0.12	0.16	0.18	0.19	0.18	0.16	0.12	0.07	0
	ADDITIONAL CAMBER	0	0.00	0.00	0.00	0.00	0.00	0.00	0.00	0.00	0.00	0	0.00	0.00	0.00	0.00	0.00	0.00	0.00	0.00	0.00	0	0.00	0.00	0.00	0.00	0.00	0.00	0.00	0.00	0.00	0
	TOTAL CAMBER	0	0.05	0.09	0.12	0.13	0.12	0.09	0.06	0.03	0.01	0	0.23	0.50	0.71	0.84	0.90	0.81	0.64	0.40	0.15	0	0.18	0.44	0.68	0.87	1.02	1.06	0.96	0.75	0.43	0
(INT.) BM 5&6	STEEL DL DEFLECTION	0	0.00	0.01	0.01	0.01	0.01	0.00	0.00	0.00	0.00	0	0.02	0.05	0.08	0.09	0.10	0.09	0.07	0.04	0.01	0	0.02	0.05	0.08	0.10	0.12	0.13	0.12	0.09	0.05	0
	CONC. DL DEFLECTION	0	0.01	0.02	0.03	0.03	0.02	0.01	-0.01	-0.01	-0.01	0	0.09	0.21	0.31	0.37	0.40	0.36	0.27	0.15	0.04	0	0.06	0.19	0.31	0.42	0.50	0.53	0.48	0.37	0.20	0
	S.D.L. DEFLECTION	0	0.01	0.01	0.01	0.01	0.01	0.01	0.00	-0.01	-0.01	0	0.04	0.10	0.15	0.18	0.20	0.18	0.14	0.08	0.02	0	0.03	0.09	0.15	0.21	0.25	0.27	0.24	0.19	0.10	0
	VERT. CURVE CAMBER	0	0.03	0.05	0.07	0.08	0.08	0.08	0.07	0.05	0.03	0	0.08	0.15	0.19	0.22	0.23	0.22	0.19	0.15	0.08	0	0.07	0.12	0.16	0.18	0.19	0.18	0.16	0.12	0.07	0
	ADDITIONAL CAMBER	0	0.00	0.00	0.00	0.00	0.00	0.00	0.00	0.00	0.00	0	0.00	0.00	0.00	0.00	0.00	0.00	0.00	0.00	0.00	0	0.00	0.00	0.00	0.00	0.00	0.00	0.00	0.00	0.00	0
	TOTAL CAMBER	0	0.05	0.09	0.12	0.13	0.12	0.10	0.06	0.03	0.01	0	0.23	0.51	0.73	0.86	0.93	0.85	0.67	0.42	0.15	0	0.18	0.45	0.70	0.91	1.06	1.11	1.00	0.77	0.42	0
(EXT.) BM 7	STEEL DL DEFLECTION	0	0.00	0.00	0.00	0.00	0.00	0.00	0.00	0.00	0.00	0	0.02	0.04	0.06	0.08	0.09	0.09	0.07	0.04	0.01	0	0.02	0.04	0.06	0.09	0.11	0.13	0.11	0.09	0.05	0
	CONC. DL DEFLECTION	0	0.01	0.01	0.01	0.01	0.01	0.01	0.01	0.01	0.01	0	0.10	0.21	0.31	0.39	0.46	0.42	0.33	0.18	0.06	0	0.07	0.19	0.30	0.42	0.55	0.60	0.54	0.42	0.24	0
	S.D.L. DEFLECTION	0	0.00	0.01	0.01	0.01	0.01	0.01	0.01	0.01	0.00	0	0.05	0.11	0.16	0.21	0.24	0.22	0.17	0.09	0.03	0	0.04	0.11	0.14	0.23	0.30	0.33	0.29	0.22	0.13	0
	VERT. CURVE CAMBER	0	0.03	0.05	0.07	0.08	0.08	0.08	0.07	0.05	0.03	0	0.08	0.15	0.19	0.22	0.23	0.22	0.19	0.15	0.08	0	0.07	0.12	0.16	0.18	0.19	0.18	0.16	0.12	0.07	0
	ADDITIONAL CAMBER	0	0.00	0.00	0.00	0.00	0.00	0.00	0.00	0.00	0.00	0	0.00	0.00	0.00	0.00	0.00	0.00	0.00	0.00	0.00	0	0.00	0.00	0.00	0.00	0.00	0.00	0.00	0.00	0.00	0
	TOTAL CAMBER	0	0.04	0.07	0.09	0.10	0.10	0.10	0.09	0.07	0.04	0	0.25	0.51	0.72	0.90	1.02	0.95	0.76	0.46	0.18	0	0.20	0.46	0.66	0.92	1.15	1.24	1.10	0.85	0.49	0

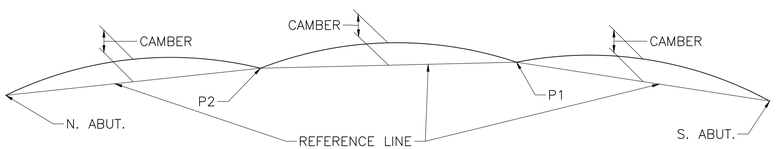

CAMBER DIAGRAM

MONTH DD, YYYY	ISSUED FOR CONSTRUCTION
DATE	DESCRIPTION
USE ONLY PRINTS OF LATEST DATE	

PROGRESS PRINT - NOT FOR CONSTRUCTION

\\VHB\GBL\PROJ\WAT-TE\08383.27\CAD\TE\604996\BR\DWG\604996_BR(BEAM_DET).DWG
604996_BR(BEAM_DET).DWG Plotted on 2-Aug-2020 8:13 PM
Second Structural Submittal (S2) 3-August-2020

WOBURN
NEW BOSTON STREET

STATE	FED. AID PROJ. NO.	SHEET NO.	TOTAL SHEETS
MA	–	116	147
PROJECT FILE NO. 604996			

STEEL DETAILS (1 OF 2)

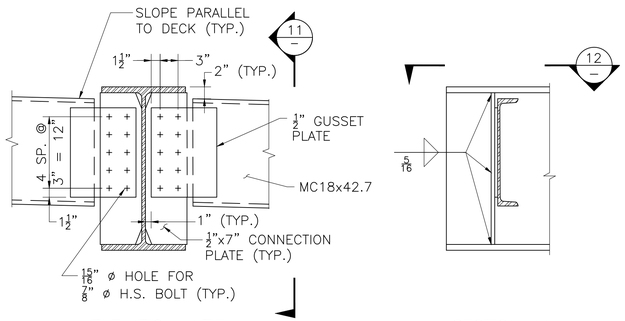

ELEVATION VIEW — SECTION 11

NOTE:
SEE CLIP DETAIL ON THIS SHEET.

D1–END DIAPHRAGM DETAILS
SCALE: 1" = 1'–0"

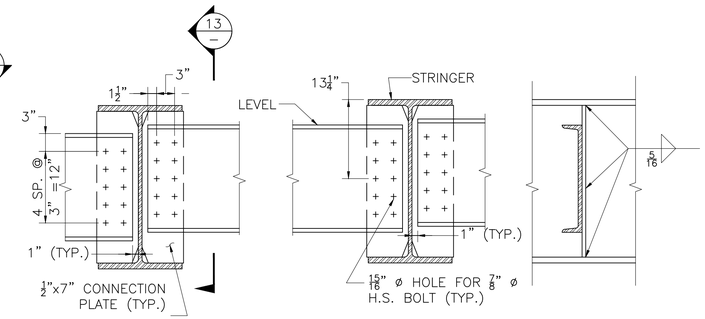

ELEVATION VIEW — SECTION 13

NOTE:
SEE CLIP DETAIL, THIS SHEET.

D2–INTERMEDIATE DIAPHRAGM DETAILS
SCALE: 1" = 1'–0"

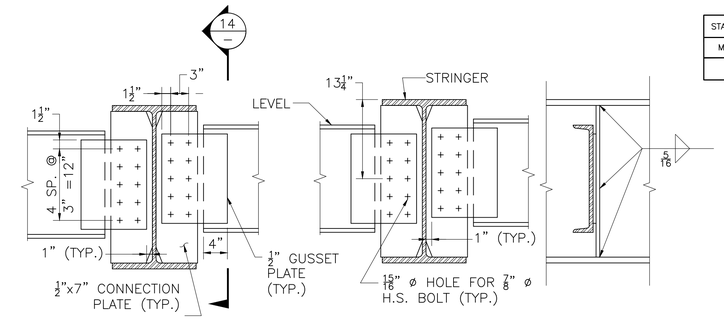

ELEVATION VIEW — SECTION 14

NOTE:
SEE CLIP DETAIL, THIS SHEET.

D3–INTERMEDIATE DIAPHRAGM DETAILS
SCALE: 1" = 1'–0"

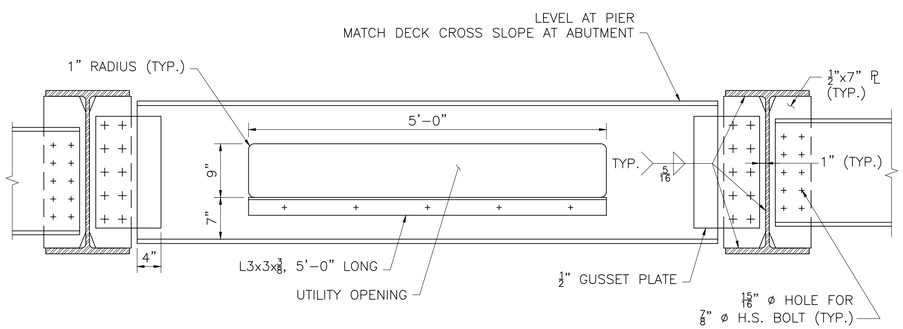

NOTES:

1. SEE DIAPHRAGM CONNECTION PLATE CLIP DETAIL, THIS SHEET.
2. CONTRACTOR TO VERIFY GEOMETRY WITH UTILITY HANGER SUPPLIER.

U1, U3–UTILITY SUPPORT DETAILS AT ABUTMENT AND PIER
SCALE: 1" = 1'–0"

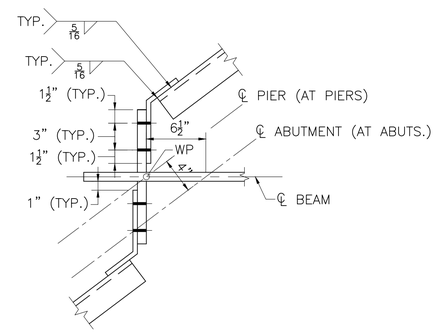

SECTION 12
SCALE: 1½" = 1'–0"

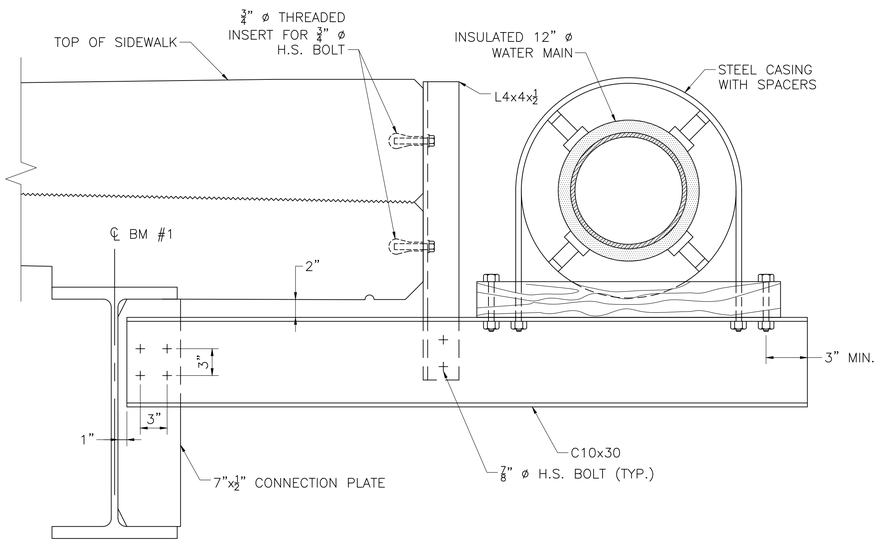

EXTERIOR WATER MAIN SUPPORT
SCALE: 1½" = 1'–0"

NOTES:

1. SUPPORTS SHALL BE SPACED EVERY 7 FEET MAX.
2. ORNAMENTAL RAIL NOT SHOWN FOR CLARITY.
3. THREADED INSERTS SHALL BE SPACED TO AVOID INTERFERENCE WITH ORNAMENTAL RAIL ANCHOR BOLTS.

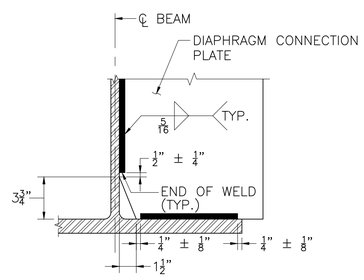

CLIP DETAIL
NOT TO SCALE

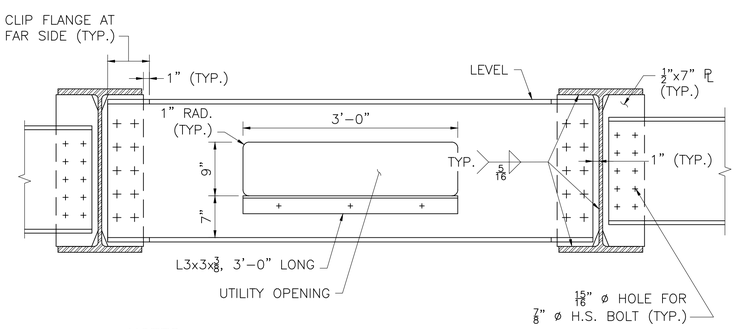

NOTES:

1. SEE DIAPHRAGM CONNECTION PLATE CLIP DETAIL, THIS SHEET.
2. CONTRACTOR TO VERIFY GEOMETRY WITH UTILITY HANGER SUPPLIER.

U2–UTILITY SUPPORT DETAILS AT INTERMEDIATE DIAPHRAGMS LOCATIONS
SCALE: 1" = 1'–0"

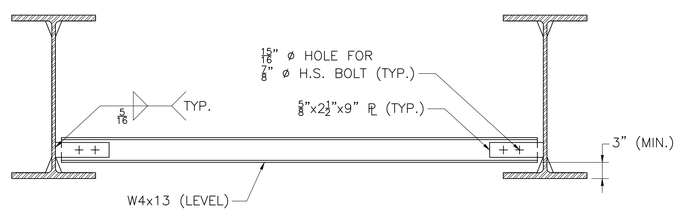

U4–UTILITY SUPPORT DETAILS BETWEEN DIAPHRAGMS
SCALE: 1" = 1'–0"

MONTH DD, YYYY	ISSUED FOR CONSTRUCTION
DATE	DESCRIPTION
USE ONLY PRINTS OF LATEST DATE	

SHEET 35 OF 47 SHEETS BRIDGE NO. W–43–017 (BB4)

PROGRESS PRINT - NOT FOR CONSTRUCTION

\\VHB\GBL\PROJ\WAT-TE\08363.27\CAD\TE604996\BR\DWG\604996_BR(STEEL_DET).DWG
604996_BR(STEEL_DET).DWG Plotted on 2-Aug-2020 8:13 PM
Second Structural Submittal (S2) 3-August-2020

WOBURN
NEW BOSTON STREET

STATE	FED. AID PROJ. NO.	SHEET NO.	TOTAL SHEETS
MA	–	117	147
PROJECT FILE NO. 604996			

STEEL DETAILS (2 OF 2)

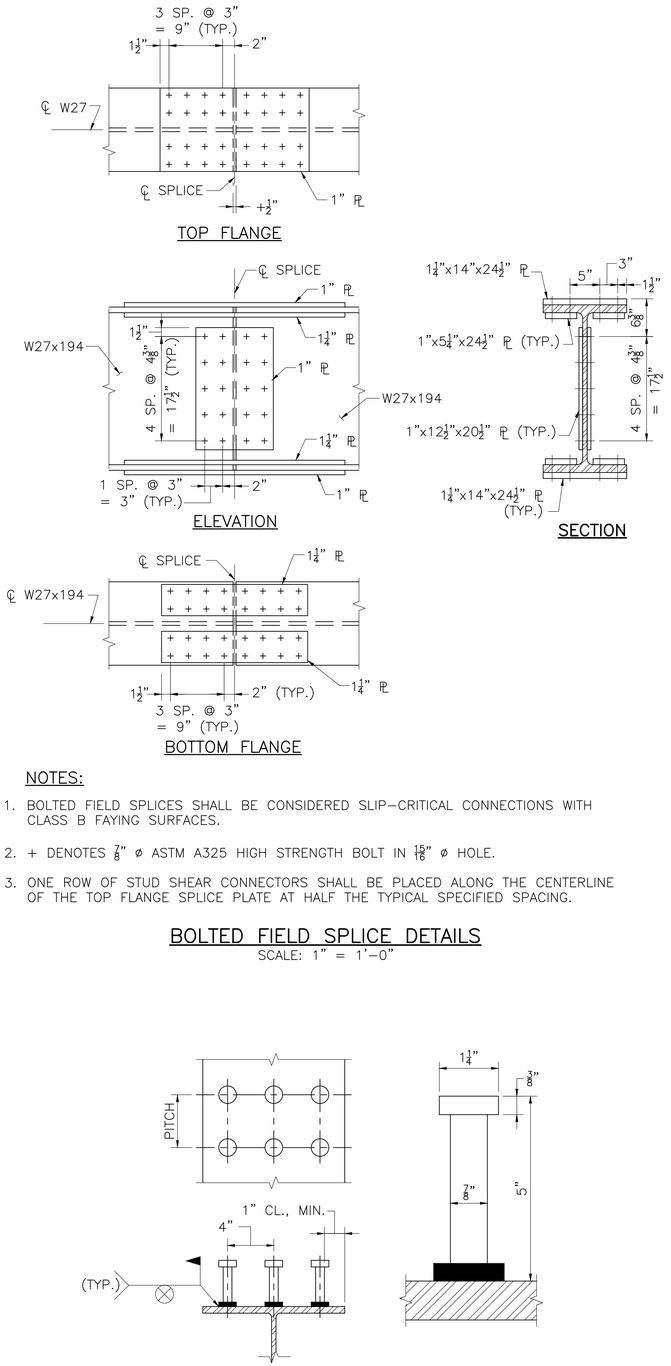

NOTES:

1. BOLTED FIELD SPLICES SHALL BE CONSIDERED SLIP–CRITICAL CONNECTIONS WITH CLASS B FAYING SURFACES.
2. + DENOTES ⅞" ø ASTM A325 HIGH STRENGTH BOLT IN 15/16" ø HOLE.
3. ONE ROW OF STUD SHEAR CONNECTORS SHALL BE PLACED ALONG THE CENTERLINE OF THE TOP FLANGE SPLICE PLATE AT HALF THE TYPICAL SPECIFIED SPACING.

BOLTED FIELD SPLICE DETAILS
SCALE: 1" = 1'–0"

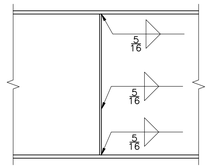

NOTES:

1. SEE CLIP DETAIL ON SHEET 35.
2. AT ABUTMENT BEARING STIFFENER PLATE AT BOTTOM FLANGE AND AT PIERS BEARING STIFFENER PLATE AT TOP FLANGE SHALL BE MILLED FOR TIGHT FIT AND WELDED WITH 5/16" FILLET WELDS BOTH SIDES OF PLATE.

DIAPHRAGM PLATE ATTACHMENT DETAIL
SCALE: ¾" = 1'–0"

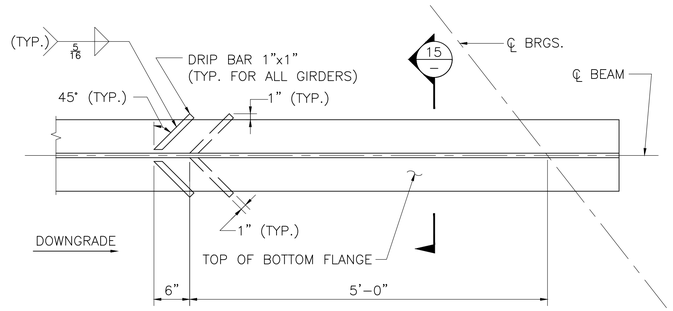

NOTE:

DRIP BARS SHALL BE LOCATED ON THE LOW END OF EACH SPAN FOR ALL BEAMS.

DRIP BAR DETAIL
SCALE: 1" = 1'–0"

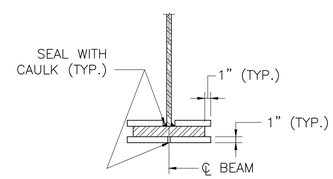

SECTION 15
SCALE: 1" = 1'–0"

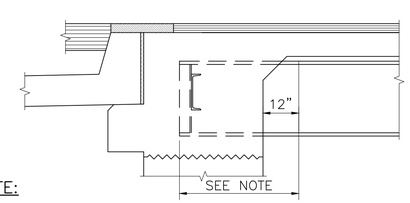

NOTE:

THE UNPAINTED WEATHERING STEEL STRINGER AND ATTACHED PLATES EMBEDDED IN THE ABUTMENT AND WITHIN 12" OF THE ABUTMENT FACE SHALL BE PAINTED IN ACCORDANCE WITH THE STANDARD SPECIFICATIONS. THE FINISH COAT COLOR SHALL MATCH COLOR CHIP NO. 30045 OF FEDERAL STANDARD 595B. THE STEEL DIAPHRAGM SHALL NOT BE PAINTED.

LIMITS OF PAINTED WEATHERING STEEL
SCALE: ½" = 1'–0"

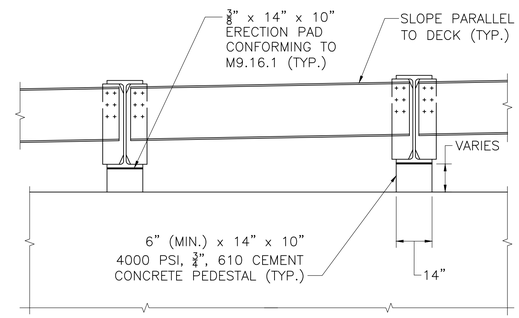

BEAM END DETAILS
SCALE: ½" = 1'–0"

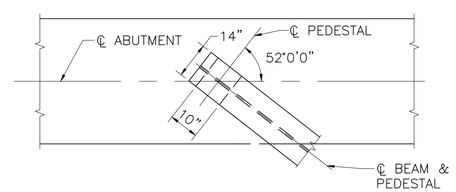

PEDESTAL PLAN
SCALE: ½" = 1'–0"

STUD SHEAR CONNECTORS
NOT TO SCALE

MONTH DD, YYYY	ISSUED FOR CONSTRUCTION
DATE	DESCRIPTION
USE ONLY PRINTS OF LATEST DATE	

SHEET 36 OF 47 SHEETS BRIDGE NO. W–43–017 (BB4)

PROGRESS PRINT - NOT FOR CONSTRUCTION

\\VHB\GBL\PROJ\WAT-TE\08363.27\CAD\TE604996\BR\DWG\604996_BR(STEEL_DET).DWG
604996_BR(STEEL_DET).DWG Plotted on 2-Aug-2020 8:14 PM
Second Structural Submittal (S2) 3-August-2020

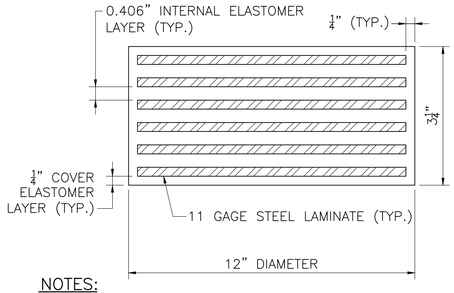

NOTES:

1. ELASTOMER SHALL HAVE A SHEAR MODULUS OF 0.160 KSI.
2. STEEL LAMINATES SHALL CONFORM TO ASTM A 1011 GRADE 36.
3. THE COMPRESSIVE DESIGN LOAD ON THE BEARING PAD IS 229 KIPS. THE COMPRESSIVE DESIGN STRESS IS THE RESULT OF DIVIDING THE COMPRESSIVE DESIGN LOAD BY THE AREA OF THE PAD AND IS EQUAL TO 2.02 KSI.
4. ELASTOMERIC BEARING PAD SHALL NOT BE VULCANIZED TO THE SOLE PLATE.

ELASTOMERIC BEARING PAD

NOT TO SCALE

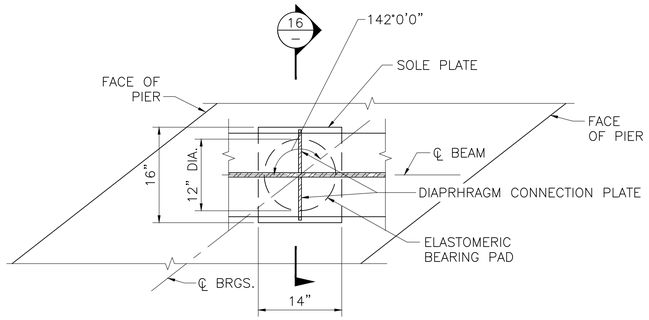

PIER 2 PLAN

SCALE: 1" = 1'-0"

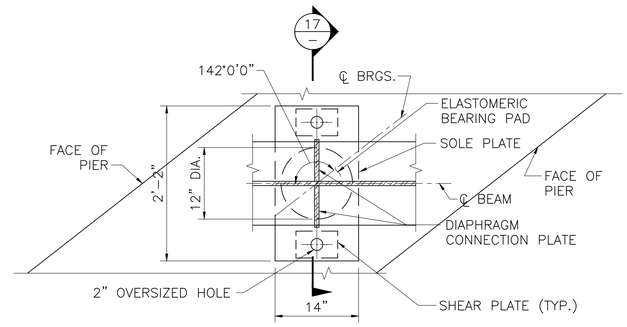

PIER 1 PLAN

SCALE: 1" = 1'-0"

WOBURN
NEW BOSTON STREET

STATE	FED. AID PROJ. NO.	SHEET NO.	TOTAL SHEETS
MA	–	118	147
PROJECT FILE NO. 604996			

BEARING DETAILS

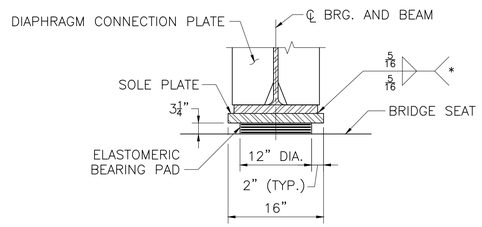

(*) – WELDS SHALL TERMINATE 1/4" FROM EDGE OF PLATE.

SECTION 16

SCALE: 1" = 1'-0"

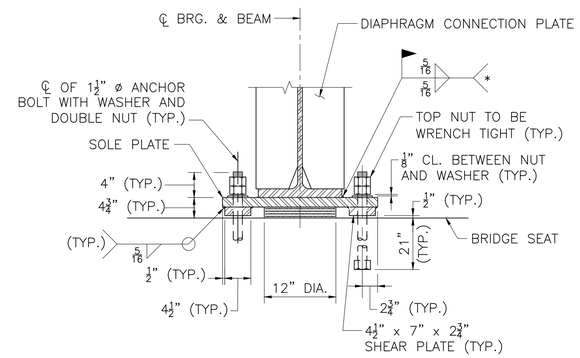

(*) – WELDS SHALL TERMINATE 1/4" FROM EDGE OF PLATE, MASKING AND TOUCH-UP PER STANDARD SPECIFICATIONS.

SECTION 17

SCALE: 1" = 1'-0"

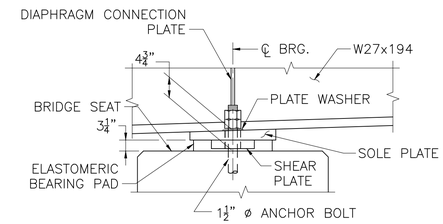

PIER 1 ELEVATION

SCALE: 1" = 1'-0"

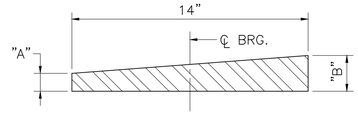

PIER 2 SOLE PLATE DETAIL

SCALE: 3" = 1'-0"

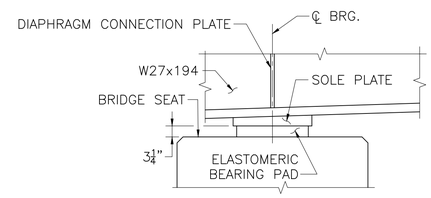

PIER 2 ELEVATION

SCALE: 1" = 1'-0"

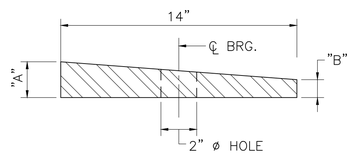

PIER 1 SOLE PLATE DETAIL

SCALE: 3" = 1'-0"

SOLE PLATE DIMENSIONS				
	PIER 2		PIER 1	
BM #	"A"	"B"	"A"	"B"
BM #1	1 5/16"	1 11/16"	1 1/2"	1 1/2"
BM #2	1 5/16"	1 11/16"	1 1/2"	1 1/2"
BM #3	1 5/16"	1 11/16"	1 1/2"	1 1/2"
BM #4	1 3/8"	1 3/8"	1 9/16"	1 9/16"
BM #5	1 3/8"	1 3/8"	1 5/8"	1 3/8"
BM #6	1 7/16"	1 3/8"	1 3/8"	1 3/8"
BM #7	1 1/2"	1 1/2"	1 11/16"	1 5/16"

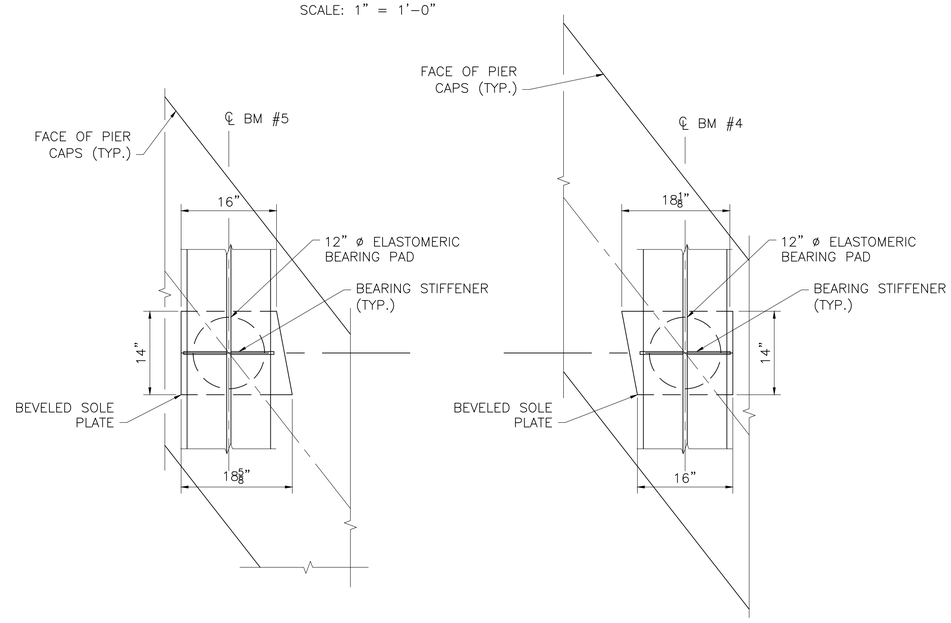

BEVELED SOLE PLATE DETAIL MODIFICATION (PIER 2)

SCALE: 1" = 1'-0"

NOTE: KEEPER BLOCK NOT SHOWN FOR CLARITY.

BEARING NOTES:

1. STEEL SOLE PLATE AND SHEAR PLATES SHALL CONFORM TO AASHTO M 270 GRADE 36 AND SHALL BE HOT-DIP GALVANIZED.
2. PLACE SOLE PLATE ASSEMBLY SO THAT IT IS CENTERED AROUND ANCHOR BOLTS. CENTER THE ELASTOMERIC PAD UNDER THE SOLE PLATE.
3. BEAMS SHALL BE ERECTED WHEN THE AMBIENT TEMPERATURE IS BETWEEN 50 °F AND 77 °F. IF BEAMS ARE ERECTED AT OTHER AMBIENT TEMPERATURES, THEY WILL HAVE TO BE JACKED AND THE SOLE PLATE ASSEMBLY AND ELASTOMERIC BEARINGS RECENTERED WHEN THE TEMPERATURE RETURNS TO THAT RANGE.
4. AFTER THE SOLE PLATE ASSEMBLY IS IN ITS FINAL POSITION, WELD IT TO THE BEAM BOTTOM FLANGE.
5. TEMPERATURE OF STEEL ADJACENT TO ELASTOMER DURING FIELD WELDING SHALL BE KEPT BELOW 250 °F.
6. ANCHOR BOLTS, NUTS, AND WASHERS SHALL CONFORM TO ASTM F 1554 GRADE 105 AND SHALL BE HOT-DIP GALVANIZED IN ACCORDANCE WITH AASHTO M 232.

MONTH DD, YYYY	ISSUED FOR CONSTRUCTION
DATE	DESCRIPTION
USE ONLY PRINTS OF LATEST DATE	

PROGRESS PRINT - NOT FOR CONSTRUCTION

\\WHBIGBLIPROJ\WAT-TE\08363.27\CAD\TE\604996\BR\DWG\604996_BR(BEARING_DET).DWG
604996_BR(BEARING_DET).DWG Plotted on 2-Aug-2020 8:14 PM
Second Structural Submittal (S2) 3-August-2020

WOBURN
NEW BOSTON STREET

STATE	FED. AID PROJ. NO.	SHEET NO.	TOTAL SHEETS
MA	–	119	147
PROJECT FILE NO. 604996			

TYPICAL SECTION

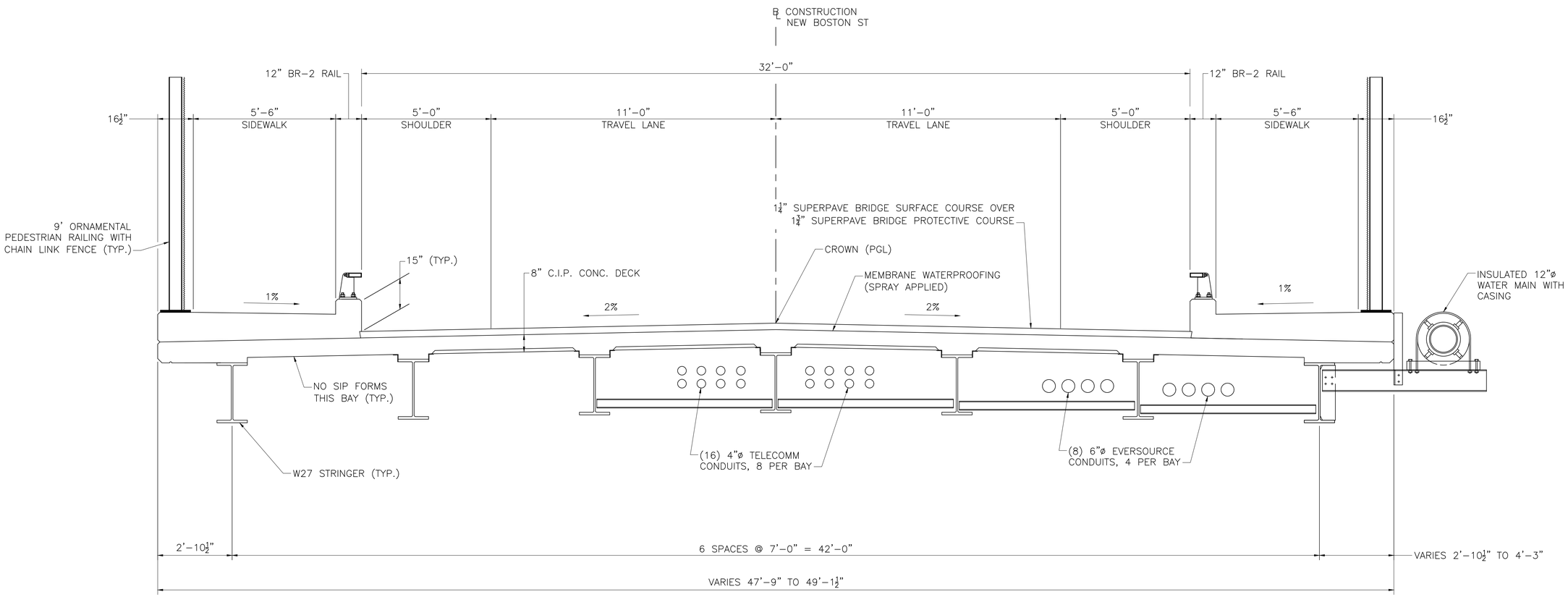

TYPICAL TRANSVERSE SECTION

SCALE: ½" = 1'-0"

MONTH DD, YYYY	ISSUED FOR CONSTRUCTION
DATE	DESCRIPTION
USE ONLY PRINTS OF LATEST DATE	

SHEET 38 OF 47 SHEETS BRIDGE NO. W-43-017 (BB4)

PROGRESS PRINT - NOT FOR CONSTRUCTION

604996_BR(TYP_SECTION).DWG Plotted on 2-Aug-2020 8:14 PM

Second Structural Submittal (S2) 3-August-2020

\\VHBIGBL\PROJ\WAT-TE\08363.27\CADTE\604996\BR\DWG\604996_BR(TYP_SECTION).DWG

WOBURN
NEW BOSTON STREET

STATE	FED. AID PROJ. NO.	SHEET NO.	TOTAL SHEETS
MA	–	120	147
PROJECT FILE NO. 604996			

DECK DETAILS (1 OF 2)

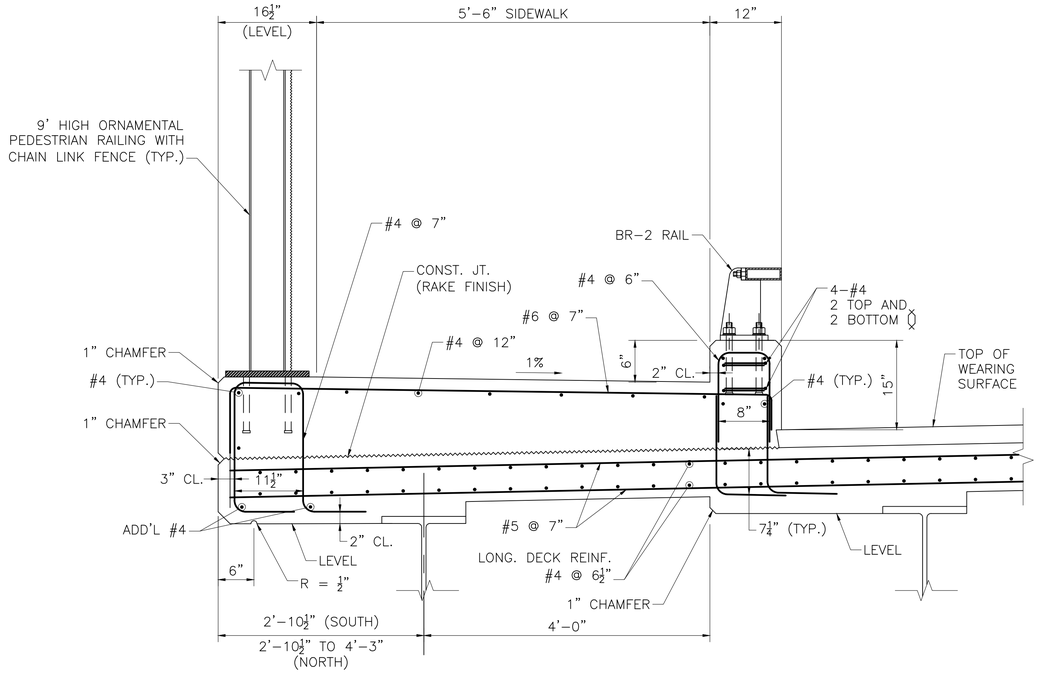

SECTION THRU SIDEWALK
SCALE: 1" = 1'–0"

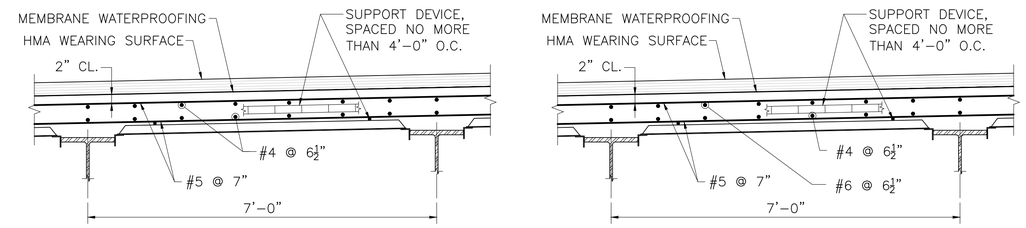

NOTES:

1. ROADWAY DECK SLAB SHALL BE 4000 PSI, ¾ IN, 585 HP CEMENT CONCRETE.
2. LONGITUDINAL REINFORCEMENT SHALL BE PLACED PARALLEL TO THE ℄ OF CONSTRUCTION.
   TRANSVERSE (PRIMARY) REINFORCEMENT SHALL BE PLACED PERPENDICULAR TO THE ℄ OF CONSTRUCTION.
3. ALL REINFORCEMENT AND SUPPORT DEVICES SHALL BE COATED.
4. THE FINISHED SURFACE OF BRIDGE DECK SHALL BE SMOOTH AND WITHOUT ANY PROJECTIONS THAT COULD PUNCTURE THE MEMBRANE WATERPROOFING OR DEPRESSIONS THAT COULD RETAIN WATER.

TYPICAL DECK REINFORCEMENT
SCALE: ¾" = 1'–0"

TYPICAL DECK REINFORCEMENT AT PIERS
SCALE: ¾" = 1'–0"

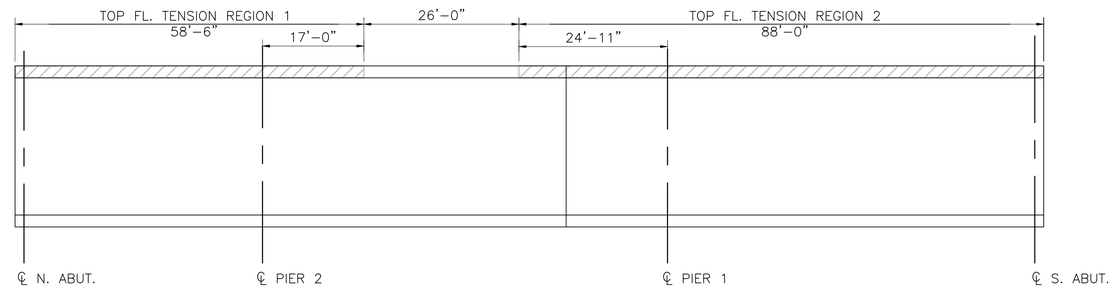

TOP FLANGE TENSION REGIONS
SCALE: N.T.S

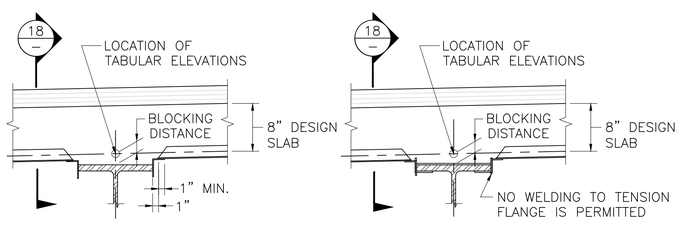

HAUNCH DETAIL AT NON–TENSION FLANGE AREA

HAUNCH DETAIL AT TENSION FLANGE AREA

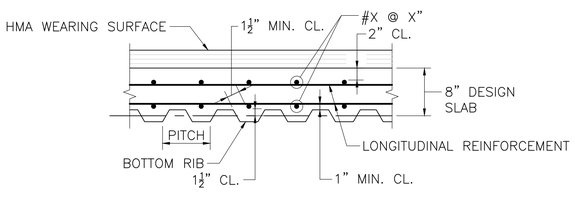

SECTION 18

STAY–IN–PLACE FORM DETAILS
NOT TO SCALE

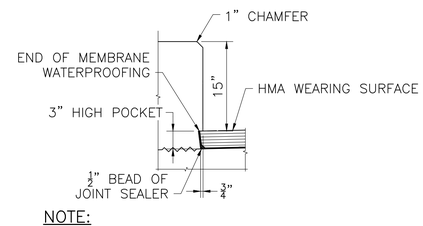

NOTE:
TURN MEMBRANE UP INTO 3" HIGH POCKET

FACE OF SIDEWALK CURB DETAILS
SCALE: 1" = 1'–0"

NOTES:

1. FOR 2" S.I.P. FORM, SET BOTTOM OF FORM 1" BELOW ELEVATION GIVEN IN TABLE. FOR 3" S.I.P. FORM, SET BOTTOM OF FORM 1½" BELOW TABLE ELEVATIONS.
2. FORM ENDS SHALL BE CRIMPED CLOSED IN A TAPERED MANNER. SEPARATE END CLOSURE PIECES WILL NOT BE ALLOWED.
3. SUPPORT ANGLES SHALL BE PLACED IN THE "LEG DOWN" POSITION WHERE POSSIBLE. WHERE "LEG UP" POSITION IS NECESSARY, THE UPPER MOST PORTION OF THE ANGLE SHALL NOT PROJECT MORE THAN 1" ABOVE THE TOP FLANGE OR COVER PLATE. THE CONTRACTOR SHALL HAVE AN ASSORTMENT OF ANGLES OF VARIOUS SIZES AVAILABLE ON THE SITE TO CONFORM TO THIS REQUIREMENT.
4. ALL MAIN STEEL REINFORCEMENT IN THE LOWER MAT SHALL BE CENTERED OVER THE VALLEY OF THE S.I.P. FORM.
5. CONTRACTOR SHALL DESIGN AND DETAIL ALL ELEMENTS OF THE FORMING SYSTEM AND SHALL SUBMIT TO THE ENGINEER FOR APPROVAL.
6. IN CASES WHERE STANDARD 2" OR 3" DEEP S.I.P. FORMS DO NOT SATISFY DESIGN REQUIREMENTS AN ALTERNATIVE FORMING SYSTEM CONSISTING OF DEEPER S.I.P. FORMS OR REMOVABLE FORMS SHALL BE DESIGNED AND DETAILED BY THE CONTRACTOR AND SUBMITTED TO THE ENGINEER FOR APPROVAL. THE DESIGN THICKNESS OF THE SLAB SHALL NOT BE REDUCED.

DATE	DESCRIPTION
MONTH DD, YYYY	ISSUED FOR CONSTRUCTION
USE ONLY PRINTS OF LATEST DATE	

PROGRESS PRINT - NOT FOR CONSTRUCTION

\\VHBGBLPROJ\WAT-TE\08363.27\CAD\TE604996\BR\DWG\604996_BR(DECK_DET).DWG
604996_BR(DECK_DET).DWG Plotted on 3-Aug-2020 1:33 PM
Second Structural Submittal (S2) 3-August-2020

DECK DETAILS (2 OF 2)

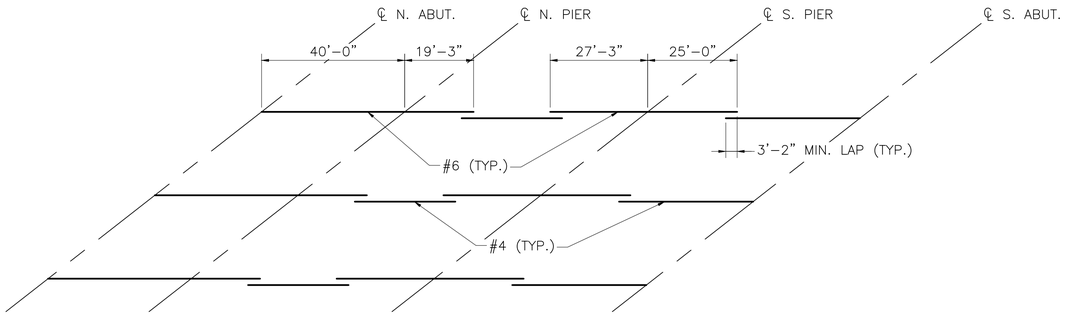

DECK REINFORCING PLAN AT NEGATIVE MOMENT REGIONS

N.T.S.

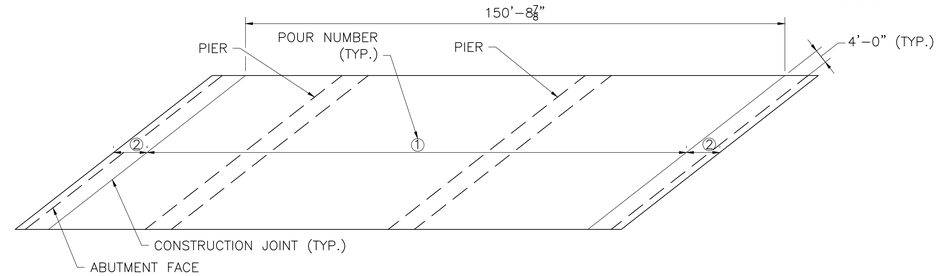

NOTE:

EACH POUR SHALL BE PLACED IN ONE CONTINUOUS POUR WITH THE APPROVAL OF THE ENGINEER PROVIDED THAT THE INITIAL SET (Fc = 500 PSI) OF ALL CONCRETE DOES NOT OCCUR UNTIL AFTER THE COMPLETION OF THE PLACEMENT. AN APPROVED RETARDER MAY BE USED WHEN NECESSARY TO RETAIN THE WORKABILITY OF THE CONCRETE. TRIAL BATCH TESTING MAY BE REQUIRED TO VERIFY THE MIX WILL REMAIN PLASTIC AND MEET SPECIFICATION REQUIREMENTS.

DECK PLACEMENT SEQUENCE

SCALE: 1" = 20'–0"

TOP OF FORM ELEVATIONS FOR DECK SLAB PRIOR TO PLACEMENT OF CONCRETE

BM. NO.	C.L. BRG. N. ABUT.	SPAN 3									C.L. PIER 2	SPAN 2									C.L. PIER 1	SPAN 1									C.L. S. ABUT.
		0.1L	0.2L	0.3L	0.4L	0.5L	0.6L	0.7L	0.8L	0.9L		0.1L	0.2L	0.3L	0.4L	0.5L	0.6L	0.7L	0.8L	0.9L		0.1L	0.2L	0.3L	0.4L	0.5L	0.6L	0.7L	0.8L	0.9L	
1	96.71	96.90	97.08	97.26	97.43	97.60	97.75	97.90	98.04	98.16	98.29	98.48	98.67	98.83	98.97	99.09	99.19	99.27	99.32	99.36	99.38	99.39	99.39	99.38	99.35	99.30	99.24	99.15	99.05	98.92	98.78
2	97.29	97.46	97.62	97.78	97.94	98.08	98.21	98.33	98.45	98.57	98.68	98.85	99.02	99.16	99.28	99.38	99.45	99.50	99.52	99.53	99.53	99.52	99.51	99.48	99.43	99.37	99.28	99.17	99.04	98.88	98.70
3	97.81	97.96	98.11	98.25	98.38	98.51	98.62	98.73	98.84	98.94	99.03	99.19	99.33	99.45	99.54	99.61	99.66	99.68	99.69	99.67	99.64	99.61	99.57	99.52	99.46	99.37	99.26	99.13	98.97	98.80	98.60
4	98.28	98.42	98.55	98.68	98.79	98.90	99.01	99.10	99.19	99.28	99.36	99.49	99.60	99.70	99.77	99.82	99.84	99.84	99.82	99.77	99.72	99.67	99.61	99.54	99.45	99.34	99.21	99.05	98.88	98.68	98.46
5	98.44	98.56	98.68	98.79	98.89	98.99	99.08	99.16	99.24	99.31	99.37	99.48	99.57	99.64	99.69	99.71	99.71	99.68	99.64	99.57	99.49	99.42	99.34	99.24	99.13	99.00	98.85	98.67	98.47	98.25	98.01
6	98.56	98.67	98.78	98.87	98.96	99.04	99.12	99.18	99.25	99.30	99.35	99.44	99.50	99.55	99.57	99.57	99.55	99.50	99.42	99.33	99.23	99.14	99.04	98.92	98.78	98.63	98.46	98.26	98.04	97.79	97.53
7	98.66	98.75	98.84	98.92	98.99	99.06	99.12	99.18	99.23	99.27	99.30	99.36	99.41	99.43	99.43	99.41	99.36	99.28	99.18	99.07	98.94	98.82	98.70	98.56	98.40	98.24	98.04	97.82	97.57	97.30	97.01

NOTE:

AFTER THE BEAMS ARE ERECTED BUT BEFORE THE FORMS ARE BUILT, ELEVATIONS ON TOP OF THE FLANGE OF THE BEAMS ARE TO BE OBTAINED AT THE POINTS INDICATED IN THE TABLE. THE DIFFERENCE BETWEEN THE ELEVATIONS OBTAINED AND THOSE SHOWN IN THE TABLE GIVES THE ACTUAL BLOCKING DISTANCE FROM THE TOP OF BEAM TO THE BOTTOM OF THE SLAB AT CENTER LINE OF BEAM.

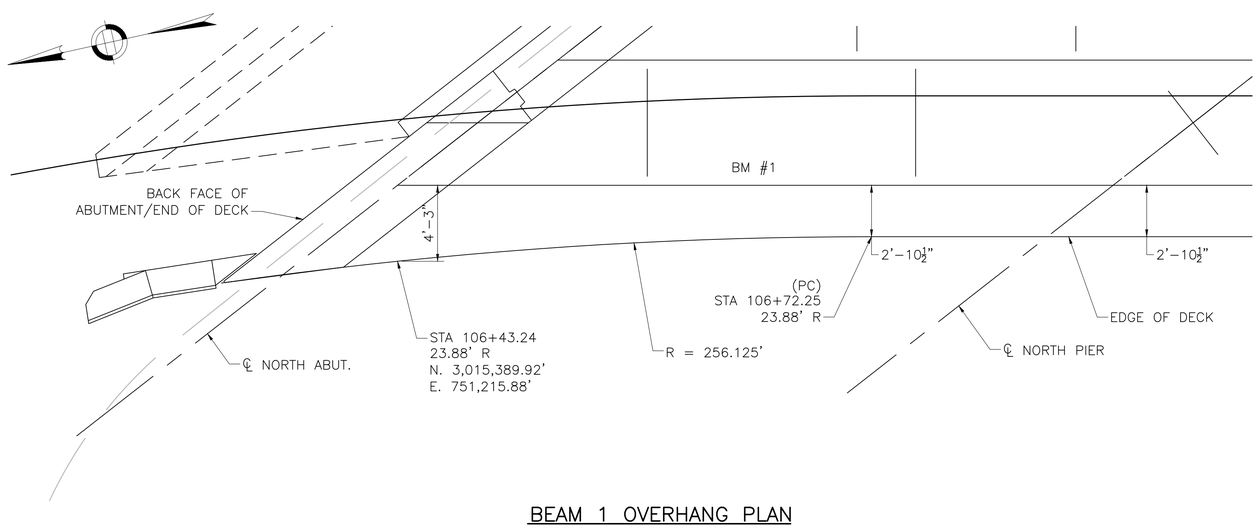

BEAM 1 OVERHANG PLAN

SCALE: ¼" = 1'–0"

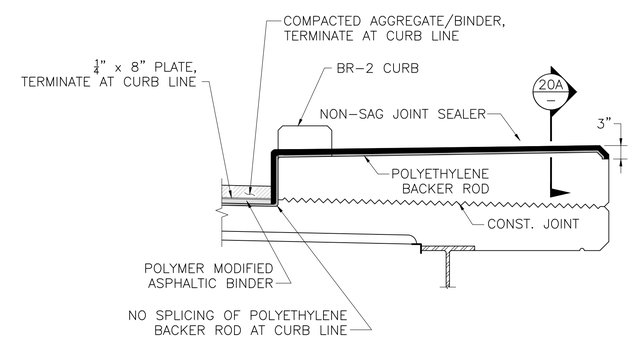

JOINT DETAIL AT SIDEWALK

SCALE: ¾" = 1'–0"

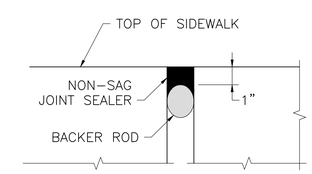

SECTION 20A

SCALE: 3" = 1'–0"

MONTH DD, YYYY	ISSUED FOR CONSTRUCTION
DATE	DESCRIPTION
USE ONLY PRINTS OF LATEST DATE	

PROGRESS PRINT - NOT FOR CONSTRUCTION

\\WHBGBL\PROJ\WAT-TE\08363.27\CAD\TE604996\BR\DWG\604996_BR(DECK_DET).DWG

604996_BR(DECK_DET).DWG Plotted on 2-Aug-2020 8:16 PM

Second Structural Submittal (S2) 3-August-2020

WOBURN
NEW BOSTON STREET

STATE	FED. AID PROJ. NO.	SHEET NO.	TOTAL SHEETS
MA	–	122	147
PROJECT FILE NO. 604996			

RAILING PLAN

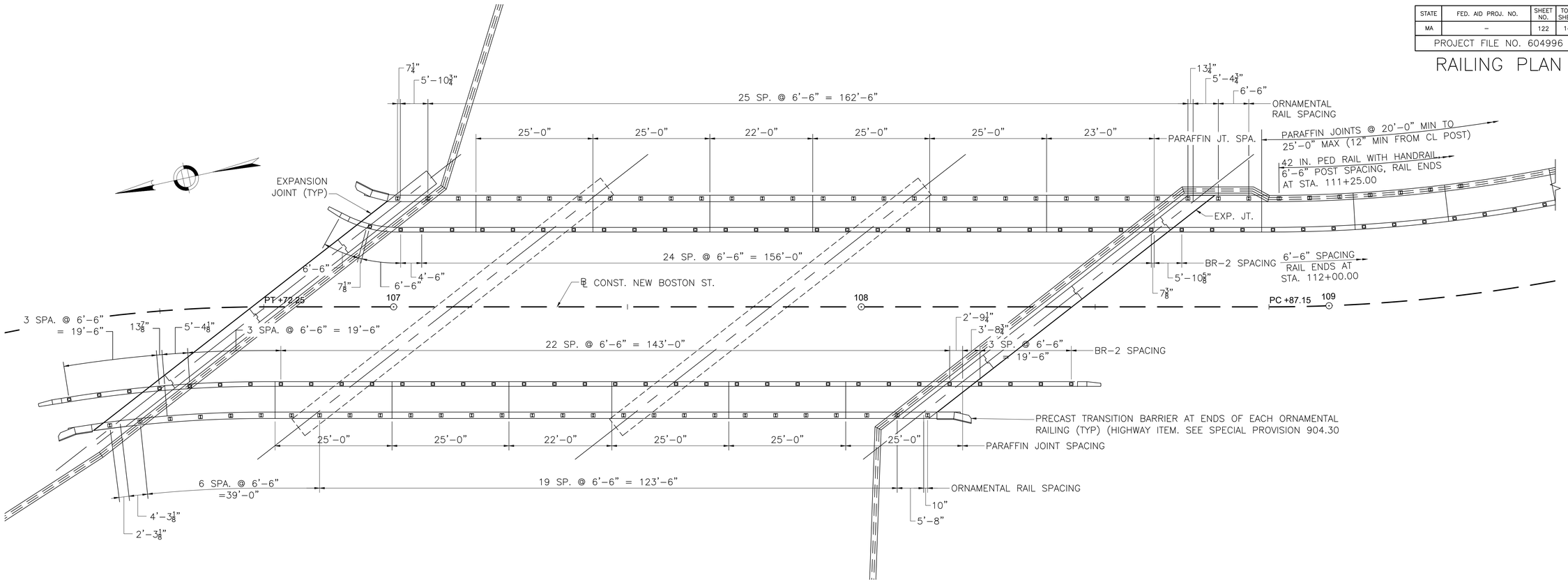

RAILING AND PARAFFIN JOINT PLAN

SCALE: $\frac{3}{32}$" = 1'-0"

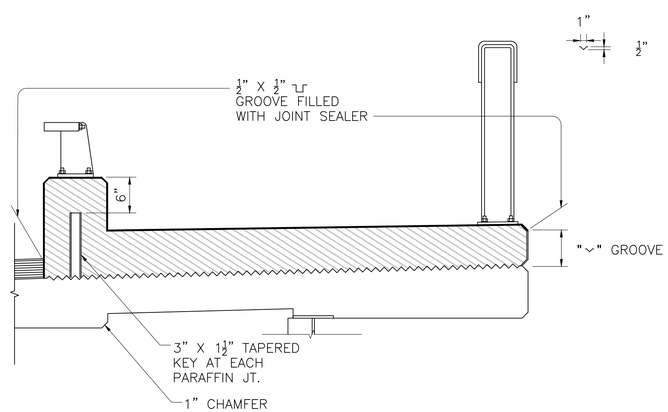

PARAFFIN JOINT DETAILS

SCALE: 1" = 1'-0"

PARAFFIN JOINT NOTES:

1. ALL CONCRETE ABOVE SLAB SHALL BE POURED IN ALTERNATIVE SECTIONS WITH NOT LESS THAN 3 DAYS BETWEEN POURS.
2. DO NOT CARRY LONGITUDINAL BARS THROUGHOUT THE PARAFFIN JOINTS, END THE REINFORCEMENT 2" CLEAR OF JOINT.
3. JOINT SHALL BE SQUARE TO FACE OF CURB.

BR-2 RAILING NOTES:

1. SEE DETAIL SHEET 43 FOR DRAIN BLOCKOUT LOCATIONS.

MONTH DD, YYYY	ISSUED FOR CONSTRUCTION
DATE	DESCRIPTION
USE ONLY PRINTS OF LATEST DATE	

PROGRESS PRINT - NOT FOR CONSTRUCTION

\\VHB\GBL\PROJ\WAT-TE\08363.27\CAD\TE604996\BR\DWG\604996_BR(RAILING_PLAN).DWG
604996_BR(RAILING_PLAN).DWG Plotted on 2-Aug-2020 10:45 PM
Second Structural Submittal (S2) 3-August-2020

WOBURN
NEW BOSTON STREET

STATE	FED. AID PROJ. NO.	SHEET NO.	TOTAL SHEETS
MA	–	123	147
PROJECT FILE NO. 604996			

MOMENT SLAB DETAILS

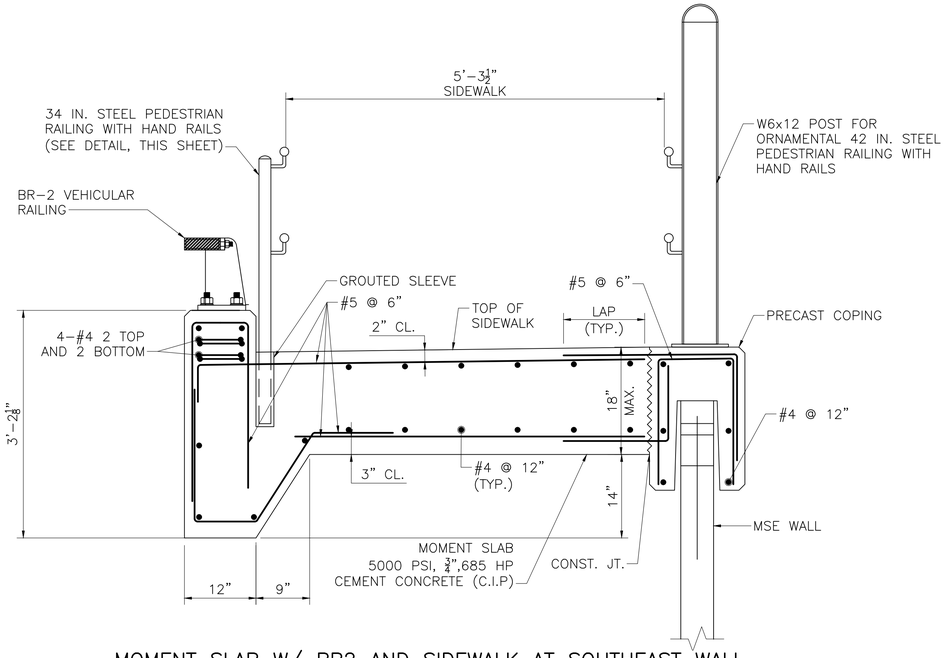

MOMENT SLAB W/ BR2 AND SIDEWALK AT SOUTHEAST WALL

SCALE: 1" = 1'–0"

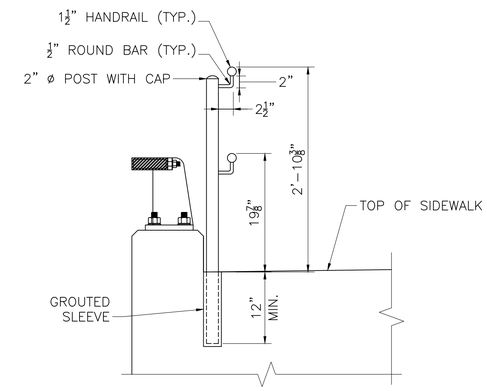

32 IN. PED RAILING EMBEDDED POST DETAIL

SCALE: 1" = 1'–0"

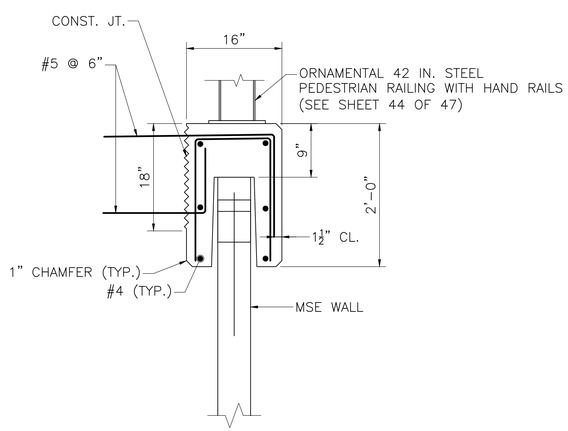

PRECAST COPING DETAIL

SCALE: 1" = 1'–0"

NOTES:

1. ORNAMENTAL RAIL ANCHOR BOLTS NOT SHOWN FOR CLARITY.
2. FOR DETAILS NOT SHOWN, SEE PRECAST COPING SECTION AT FACE OF ABUTMENT ON SHEET 27 OF 47.

DATE	DESCRIPTION
MONTH DD, YYYY	ISSUED FOR CONSTRUCTION
USE ONLY PRINTS OF LATEST DATE	

PROGRESS PRINT - NOT FOR CONSTRUCTION

\\VHB\GBL\PROJ\WAT-TE\08363.27\CAD\TE\604996\BR\DWG\604996_BR(MOM_SLAB).DWG
604996_BR(MOM_SLAB).DWG Plotted on 2-Aug-2020 8:16 PM
Second Structural Submittal (S2) 3-August-2020

WOBURN
NEW BOSTON STREET

STATE	FED. AID PROJ. NO.	SHEET NO.	TOTAL SHEETS
MA	–	124	147
PROJECT FILE NO. 604996			

BR–2 RAILING

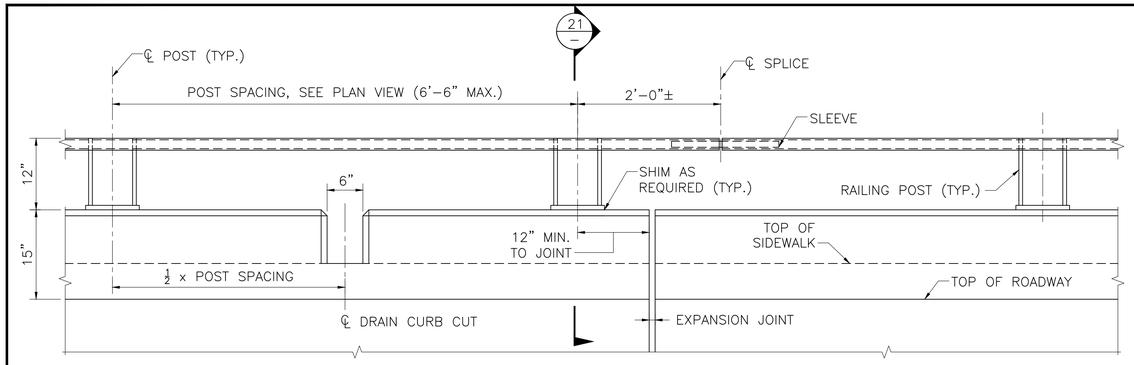

ELEVATION
SCALE: 1" = 1'–0"

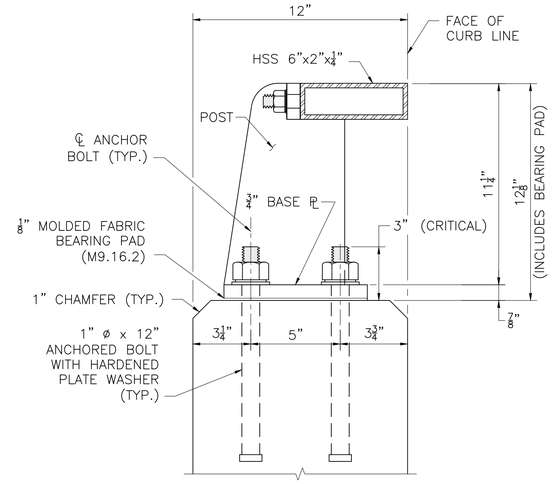

SECTION 21
SCALE: 3" – 1'–0"

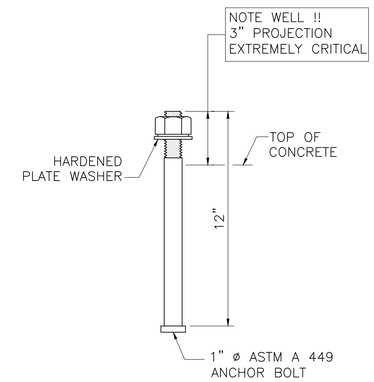

ANCHOR BOLT
SCALE: 3" – 1'–0"

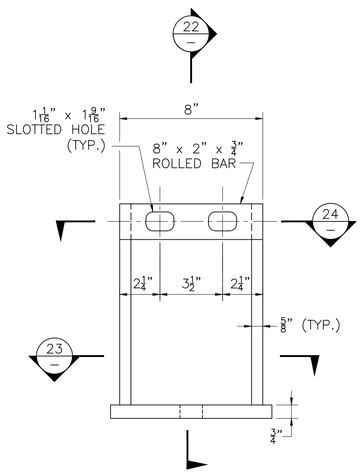

ELEVATION

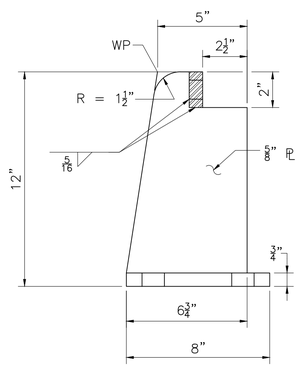

SECTION 22

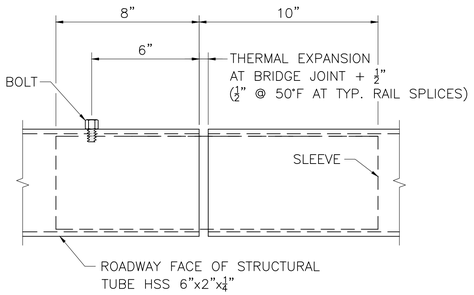

PLAN

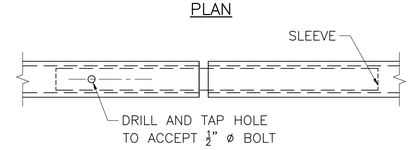

REAR ELEVATION

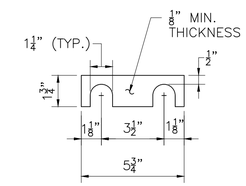

RAILING SHIM DETAIL
SCALE: 3" – 1'–0"

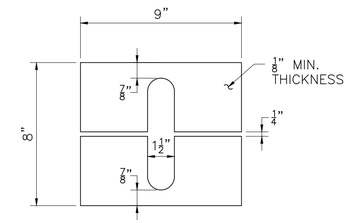

NOTE:
BEVEL SHIM AS REQUIRED TO ENSURE POSTS ARE ERECTED PLUMB.

POST SHIM DETAIL
SCALE: 3" – 1'–0"

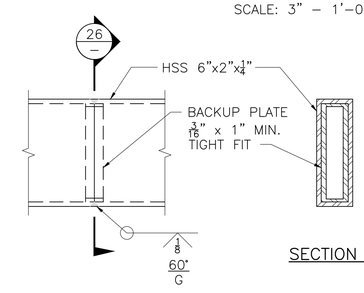

SECTION 26

TUBE–WELDED SPLICE
SCALE: 3" – 1'–0"

FINISH:

POSTS, RAILS, BASE PLATES, AND SPLICE TUBES SHALL RECEIVE GALVANIZED AND PAINTED BLACK FINISH.

MATERIALS:

STRUCTURAL STEEL TUBING	ASTM A 500 GRADE B GALVANIZED
POST AND BASE PLATE	AASHTO M 270 GRADE 36 GALVANIZED
ANCHOR BOLTS	ASTM A 449 GALVANIZED
NUTS, BOLTS, AND WASHER	ASTM A 325 GALVANIZED
STUD	ASTM A 108

GENERAL NOTES:

1. RAILS SHALL BE CONTINUOUS OVER A MINIMUM OF FOUR POSTS, IF POSSIBLE. IF NEEDED, HSS 6"x2"x¼" RAILS MAY BE CONNECTED IN THE SHOP BY USING THE TUBE–WELDED SPLICES, AS SHOWN IN THE PROVIDED DETAIL.
2. RAILS SHALL HAVE A TUBE SPLICE IN THE PANEL OVER A BRIDGE EXPANSION JOINT.
3. ANCHOR BOLTS SHALL BE SET WITH TEMPLATES. THE NUT SECURING THE POST BASE PLATE TO THE CONCRETE SHALL BE TIGHTENED TO A SNUG FIT AND GIVEN AN ADDITIONAL 1/8 TURN AFTER STEEL IS IN PLACE.
4. ALL POSTS TO BE PLUMB WHEN PROFILE GRADE EXCEEDS 1.5%. FOR PROFILE GRADES LESS THAN 1.5%, POSTS SHALL BE SET PERPENDICULAR TO GRADE.
5. WELDING SHALL CONFORM TO THE REQUIREMENTS OF ANSI/AASHTO/AWS D.1.5, EXCEPT THAT WELDING OF THE TUBE–WELDED SPLICE SHALL CONFORM TO THE REQUIREMENTS OF ANSI/AWS D.1.1.
6. CONCRETE CURB CUTS FOR DRAINAGE SHALL BE PROVIDED BETWEEN EVERY OTHER RAIL POST.

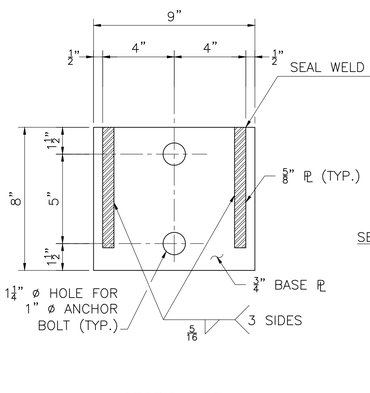

SECTION 23

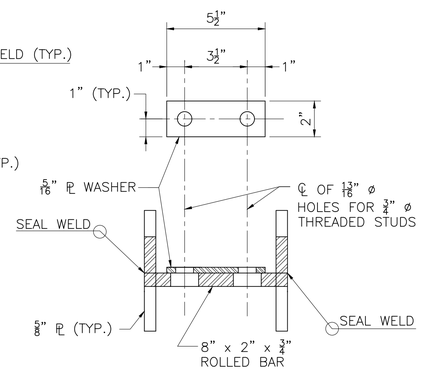

SECTION 24

RAIL POST DETAILS
SCALE: 3" – 1'–0"

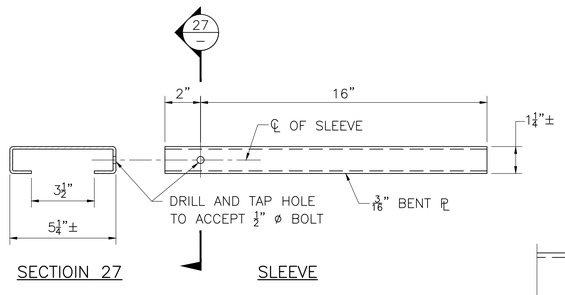

SECTIOIN 27

SLEEVE

TYPICAL SPLICE DETAILS
SCALE: 3" – 1'–0"

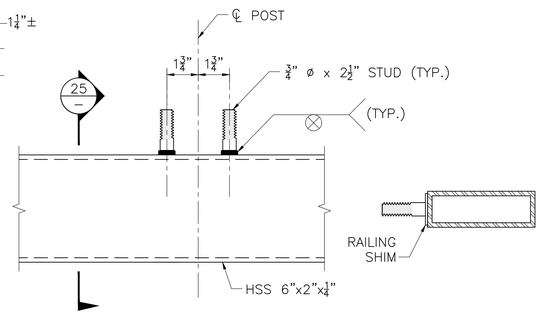

PLAN

SECTION 25

STUD DETAIL
SCALE: 3" – 1'–0"

BR–2 BRIDGE RAILING

MONTH DD, YYYY	ISSUED FOR CONSTRUCTION
DATE	DESCRIPTION
USE ONLY PRINTS OF LATEST DATE	

PROGRESS PRINT - NOT FOR CONSTRUCTION

\\VHBIGBL\PROJ\WAT-TE\08363.27\CAD\TE\604996\BR\DWG\604996_BR(BR2_RAIL).DWG
604996_BR(BR2_RAIL).DWG Plotted on 2-Aug-2020 8:17 PM
Second Structural Submittal (S2) 3-August-2020

WOBURN
NEW BOSTON STREET

STATE	FED. AID PROJ. NO.	SHEET NO.	TOTAL SHEETS
MA	–	125	147
PROJECT FILE NO. 604996			

ORNAMENTAL RAIL DETAILS

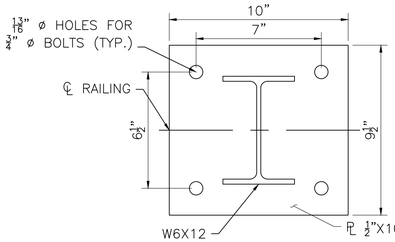

SECTION 30
SCALE: 3" = 1'-0"

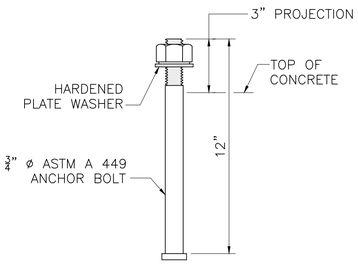

ANCHOR BOLT
SCALE: 3" = 1'-0"

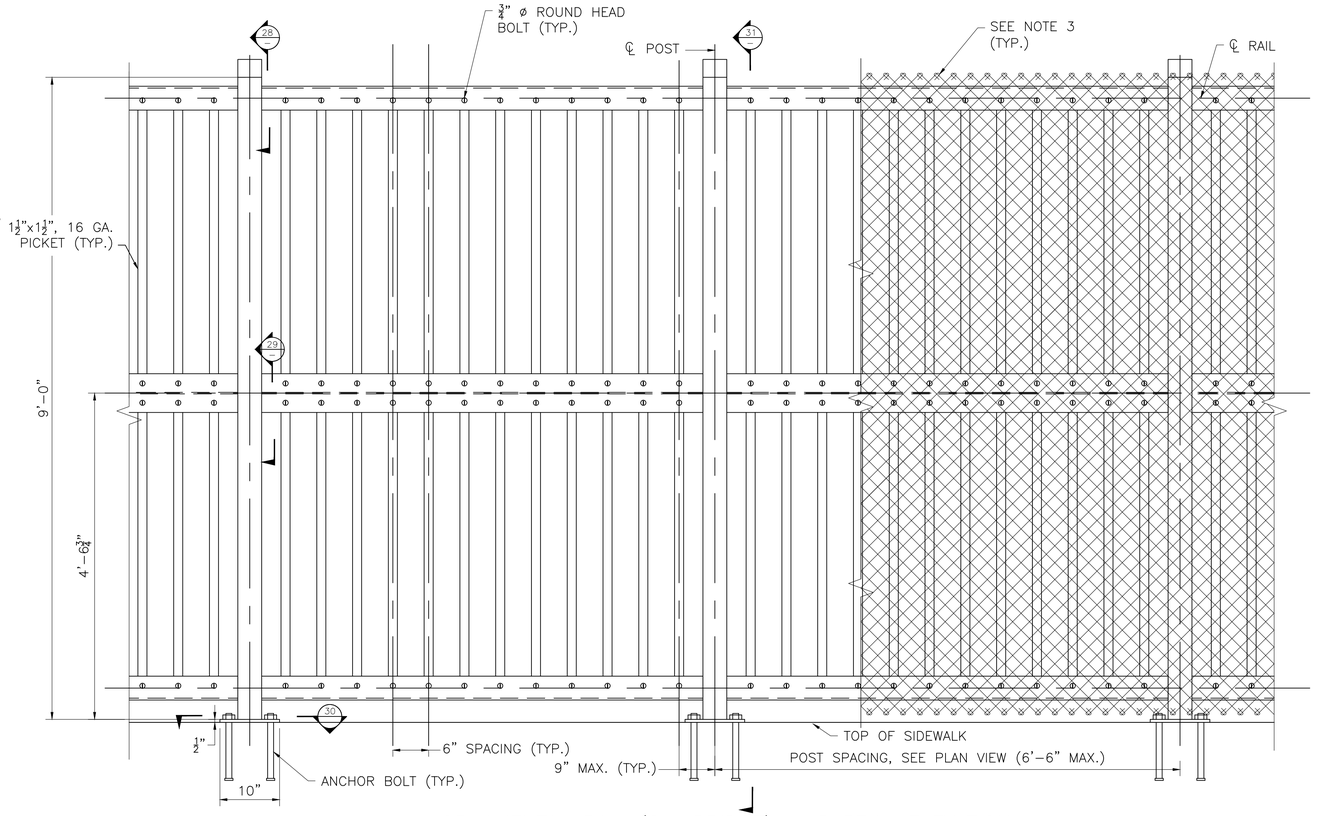

ORNAMENTAL RAIL (ON-BRIDGE) – PARTIAL ELEVATION
SCALE: 1" = 1'-0"

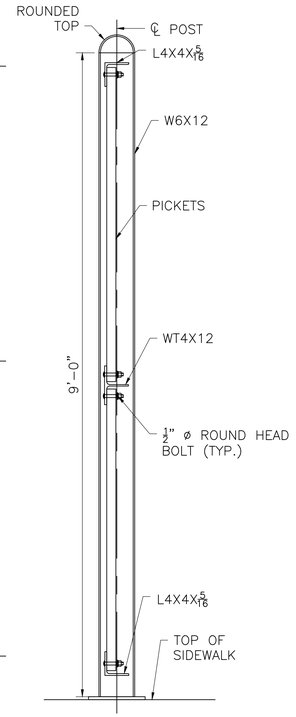

SECTION 31
SCALE: 1"=1'-0"

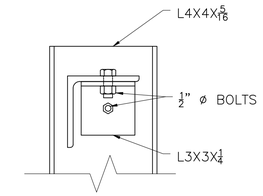

SECTION 28
SCALE: 3" = 1'-0"

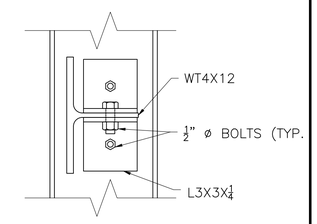

SECTION 29
SCALE: 3" = 1'-0"

GENERAL NOTES:

1. USE 6 GAGE TIES AT 12" O.C. TO ALL POSTS AND TOP 2 RAILS. SPACE TIES TO BOTTOM RAIL AT 6" O.C.
2. ALL ALUMINUM, INCLUDING HARDWARE AND FABRIC, SHALL RECEIVE A 4±1 MIL POLYESTER POWDER COAT FINISH, BLACK COLOR.
3. THE CHAIN LINK FABRIC SHALL BE SECURED BY KNUCKLING TOGETHER THE CUT ENDS OF THE FABRIC WIRE IN A MANNER SIMILAR TO THE ORIGINALLY MANUFACTURED END.

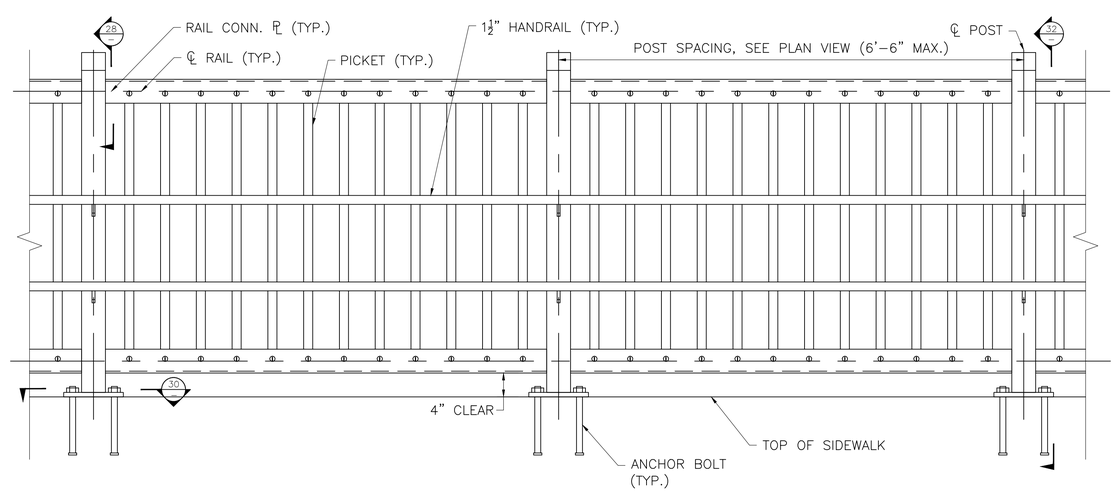

42 IN. STEEL PEDESTRIAN RAILING WITH HAND RAILS (OFF-BRIDGE) – PARTIAL ELEVATION
SCALE: 1" = 1'-0"

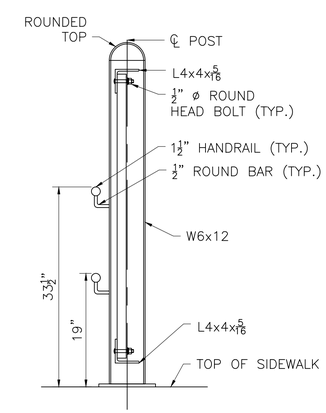

SECTION 32
SCALE: 1" = 1'-0"

MATERIALS:

FABRIC AND TIES	AASHTO M 181 TYPE III, ALLOY 6061-T89 OR T94; 6 GAGE
TENSION BANDS	ASTM B 221, ALLOY 6063-T5
BOLTS	ASTM B 316, ALLOY 2024-T4
NUTS	ASTM B 316, ALLOY 6061-T6

MONTH DD, YYYY	ISSUED FOR CONSTRUCTION
DATE	DESCRIPTION
USE ONLY PRINTS OF LATEST DATE	

PROGRESS PRINT - NOT FOR CONSTRUCTION

\\VHB\GBL\PROJ\WAT-TE\08363.27\CAD\TE\604996\BR\DWG\604996_BR(ORNAMENT_RAIL).DWG
604996_BR(ORNAMENT_RAIL).DWG Plotted on 2-Aug-2020 8:17 PM
Second Structural Submittal (S2) 3-August-2020

WOBURN
NEW BOSTON STREET

STATE	FED. AID PROJ. NO.	SHEET NO.	TOTAL SHEETS
MA	–	126	147
PROJECT FILE NO. 604996			

BR–2 TERMINUS

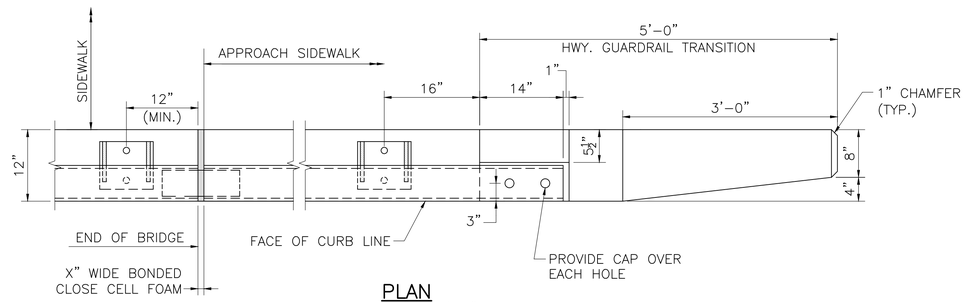

PLAN
SCALE: 1" = 1'–0"

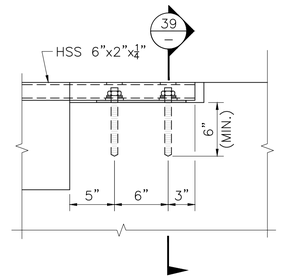

ELEVATION

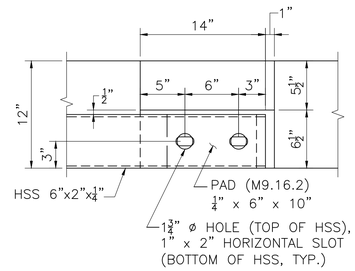

PLAN

RAIL ATTACHMENT
SCALE: 1½" = 1'–0"

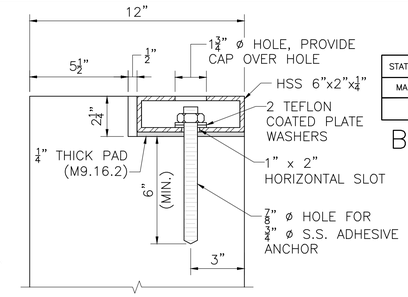

SECTION 39
SCALE: 3" = 1'–0"

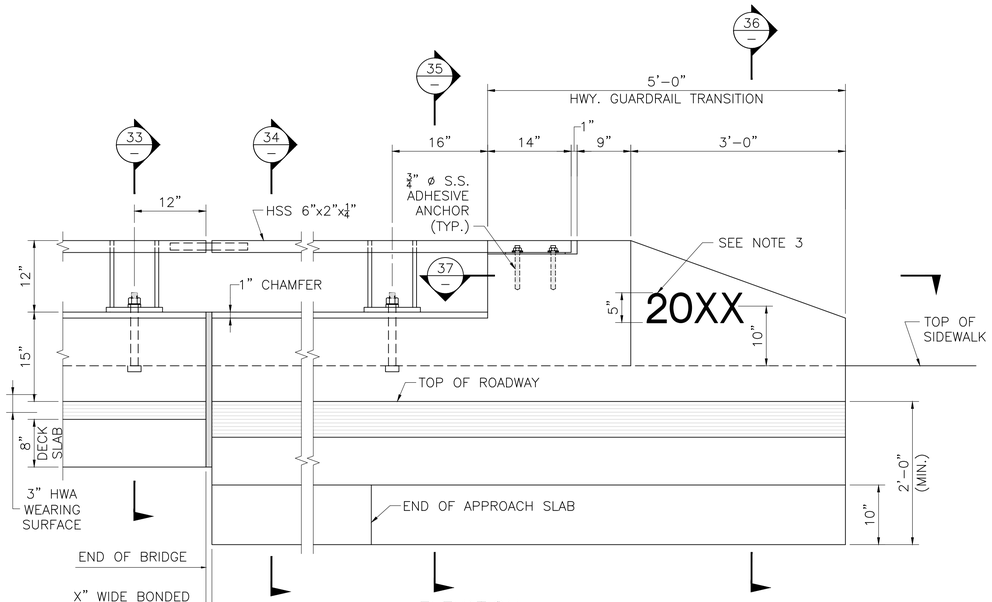

ELEVATION
SCALE: 1" = 1'–0"

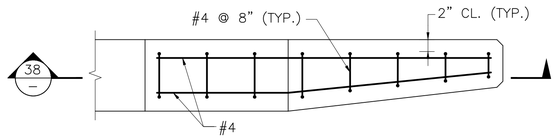

SECTION 37
SCALE: 1" = 1'–0"

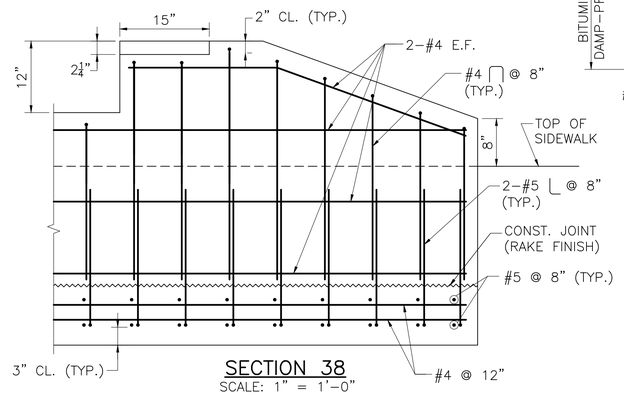

SECTION 38
SCALE: 1" = 1'–0"

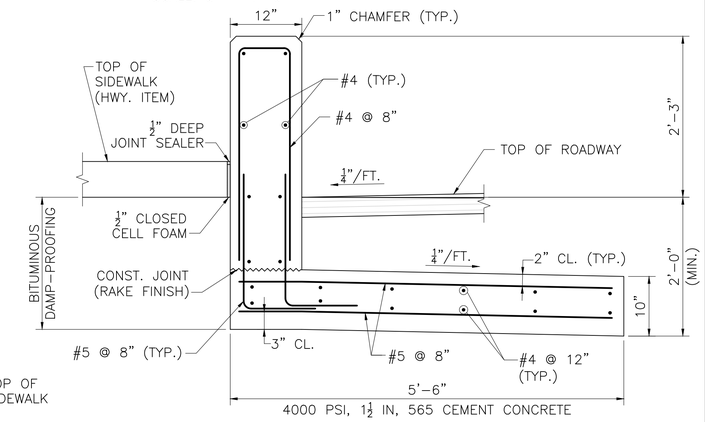

SECTION 36
SCALE: 1" = 1'–0"

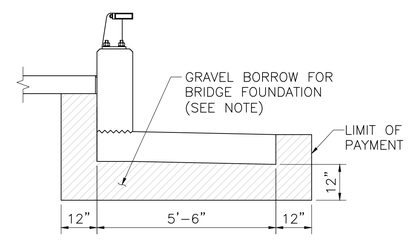

NOTE:
GRAVEL BORROW SHALL BE PLACED AND THOROUGHLY COMPACTED TO THE GRADE OF THE BOTTOM OF THE SLAB.

BR–2 RAILING BACKFILL
SCALE: ½" = 1'–0"

NOTES:

1. THREADED INSERTS SHALL BE PREQUALIFIED BY THE MANUFACTURER AS BEING CAPABLE OF DEVELOPING A NOMINAL SHEAR RESISTANCE OF 20 KIPS PER ⅞" ø S.S. BOLT. S.S. BOLTS SHALL BE ⅞" ø x 1½" LONG FULLY THREADED AISI TYPE 304N STAINLESS STEEL. INSERTS FOR ⅞" S.S. BOLTS SHALL BE CAST–IN–PLACE AND GALVANIZED.
2. ALL CONCRETE FOR THE BR–2 RAILING AND HIGHWAY GUARDRAIL TRANSITION SHALL BE 5000 PSI, ¾ IN, 685 HP CEMENT CONCRETE.
3. USE LATEST CONTRACT COMPLETION YEAR IN EFFECT WHEN THE FIRST HIGHWAY GUARDRAIL TRANSITION IS CAST.

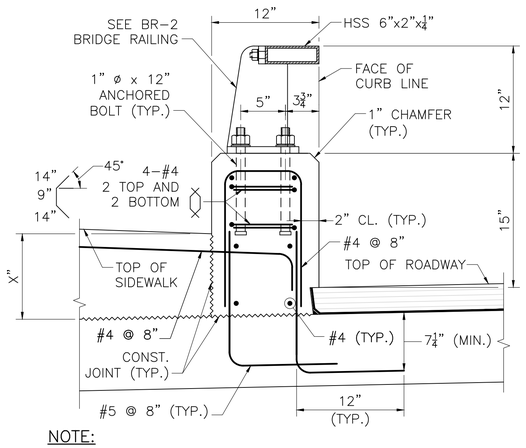

NOTE:
SIDEWALK AND DECK SLAB REINFORCEMENT NOT SHOWN FOR CLARITY.

SECTION 33
SCALE: 1½" = 1'–0"

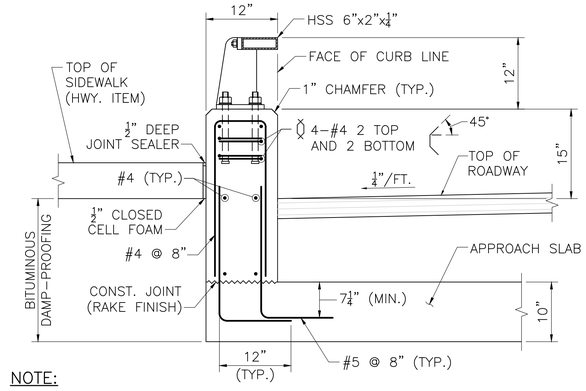

NOTE:
APPROACH SLAB REINFORCEMENT NOT SHOWN FOR CLARITY.

SECTION 34
SCALE: 1" = 1'–0"

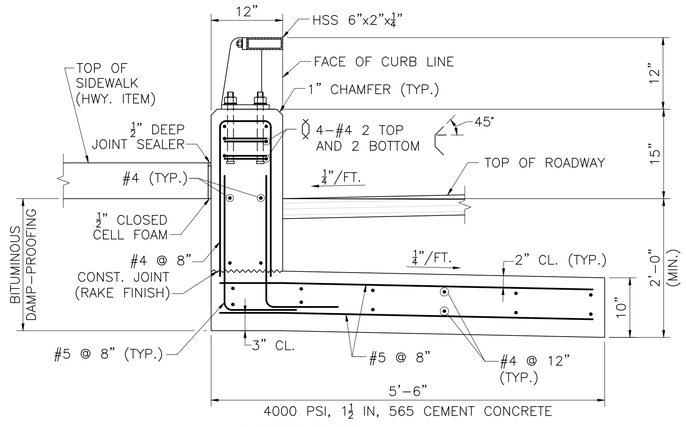

SECTION 35
SCALE: 1" = 1'–0"

HIGHWAY GUARDRAIL TRANSITION FOR BR–2 RAILING

MONTH DD, YYYY	ISSUED FOR CONSTRUCTION
DATE	DESCRIPTION
USE ONLY PRINTS OF LATEST DATE	

PROGRESS PRINT - NOT FOR CONSTRUCTION

\\VHB\GBL\PROJ\WAT-TE\08363.27\CAD\TE\604996\BR\DWG\604996_BR(BR2_TERMINUS).DWG
604996_BR(BR2_TERMINUS).DWG Plotted on 2-Aug-2020 8:17 PM
Second Structural Submittal (S2) 3-August-2020

WOBURN
NEW BOSTON STREET

STATE	FED. AID PROJ. NO.	SHEET NO.	TOTAL SHEETS
MA	–	127	147
PROJECT FILE NO. 604996			

HIGHWAY GUARDRAIL TRANSITION TOP

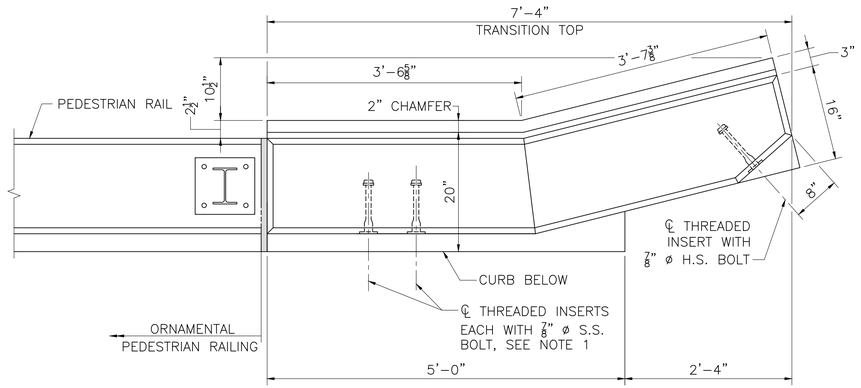

PLAN AT SIDEWALK
SCALE: 1" = 1'-0"

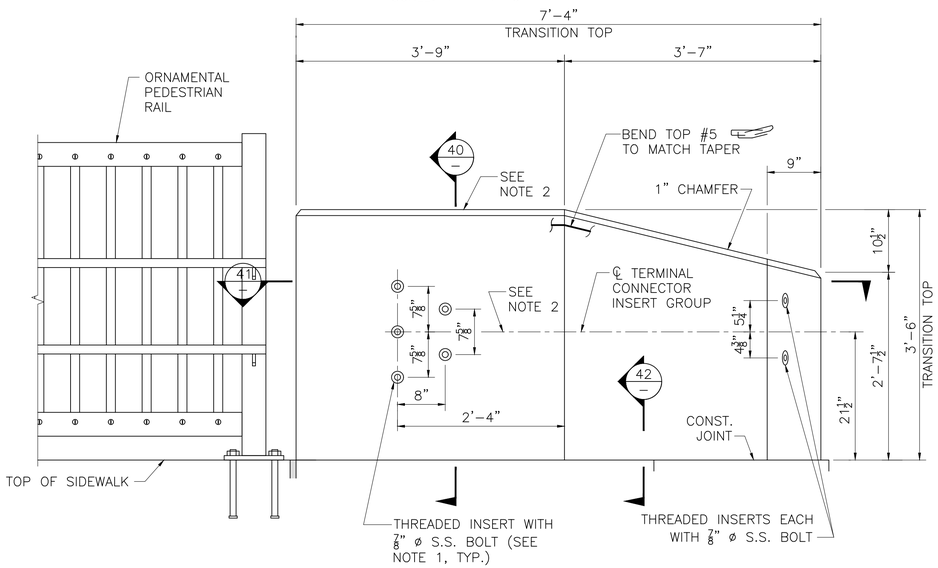

ELEVATION AT SIDEWALK
SCALE: 1" = 1'-0"

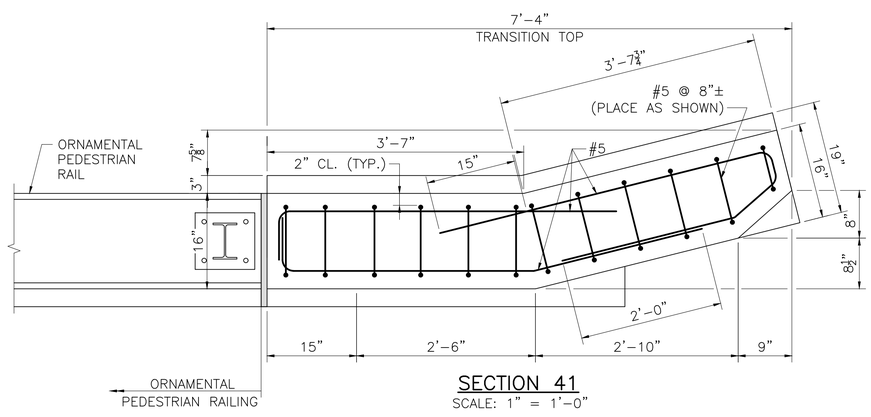

SECTION 41
SCALE: 1" = 1'-0"

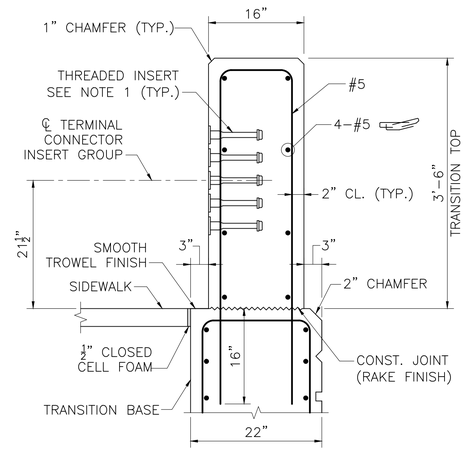

SECTION 40 AT SIDEWALK
SCALE: 1" = 1'-0"

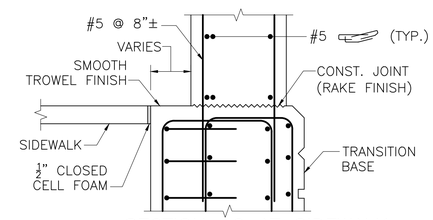

SECTION 42 AT SIDEWALK
SCALE: 1" = 1'-0"

NOTES:

1. THREADED INSERTS SHALL BE PREQUALIFIED BY THE MANUFACTURER AS BEING CAPABLE OF DEVELOPING A NOMINAL SHEAR RESISTANCE OF 20 KIPS PER 7/8" ø S.S. BOLT. S.S. BOLTS SHALL BE 7/8" ø x 1 1/2" LONG FULLY THREADED AISI TYPE 304N STAINLESS STEEL. INSERTS FOR 7/8" S.S. BOLTS SHALL BE GALVANIZED AND CAST INTO THE TRANSITION.

2. FOR AN APPROACH GRADE UP TO 3%, THE TRANSITION MAY BE CAST SQUARE AND SET PLUMB WITH THE MINIMUM EMBEDMENT DEPTH SHOWN. THE TERMINAL CONNECTOR INSERT GROUP SHALL BE SQUARE TO THE POST.

   FOR AN APPROACH GRADE IN EXCESS OF 3%, THE TRANSITION TOP AND THE TOP OF CURB SHALL FOLLOW THE APPROACH GRADE. THE HEIGHT OF THE TRANSITION TOP SHALL VARY PROVIDED THAT THE MINIMUM DIMENSIONS SHOWN ON THE CONSTRUCTION DRAWINGS ARE MET. THE BOTTOM OF THE TRANSITION BASE SHALL BE SET LEVEL WITH THE MINIMUM EMBEDMENT DEPTH SHOWN. THE TERMINAL CONNECTOR INSERT GROUP SHALL BE SLOPED TO FOLLOW THE APPROACH GRADE.

3. ALL CONCRETE FOR THE PRECAST HIGHWAY GUARDRAIL TRANSITION SHALL BE 5000 PSI, 3/4", 685 HP CEMENT CONCRETE.

4. LIFTING DEVICES (NOT SHOWN), INCLUDING THEIR NUMBER AND LOCATION, SHALL BE DESIGNED AND DETAILED BY THE PRECASTER. THEY SHALL BE GALVANIZED AND SHALL BE PLACED AND RECESSED IN POCKETS TO PROVIDE 1 1/2" CLEAR COVER TO THE FACE OF THE TRANSITION CONCRETE. THESE DEVICES SHALL BE CLEARLY SHOWN ON THE SHOP DRAWINGS ALONG WITH ALL SUPPORTING CALCULATIONS AND/OR CATALOG CUTS. ONCE THE PRECAST TRANSITION IS SET IN PLACE, THE LIFTING DEVICE POCKETS SHALL BE FILLED WITH A NON-SHRINK GROUT THAT MATCHES THE COLOR OF THE TRANSITION CONCRETE WHEN CURED AND THE FILLED POCKETS SHALL BE RUBBED WITH A CORUNDUM STONE TO BLEND OUT THE JOINTS.

MONTH DD, YYYY	ISSUED FOR CONSTRUCTION
DATE	DESCRIPTION
USE ONLY PRINTS OF LATEST DATE	

TOP OF PRECAST HIGHWAY GUARDRAIL TRANSITION FOR PEDESTRIAN RAILING

PROGRESS PRINT - NOT FOR CONSTRUCTION

\\VHB\GBL\PROJ\WAT-TE\08363.27\CAD\TE604996\BR\DWG\604996_BR(HGT_TOP).DWG
604996_BR(HGT_TOP).DWG Plotted on 2-Aug-2020 8:17 PM
Second Structural Submittal (S2) 3-August-2020

WOBURN
NEW BOSTON STREET

STATE	FED. AID PROJ. NO.	SHEET NO.	TOTAL SHEETS
MA	–	128	147
PROJECT FILE NO. 604996			

HIGHWAY GUARDRAIL TRANSITION BOTTOM

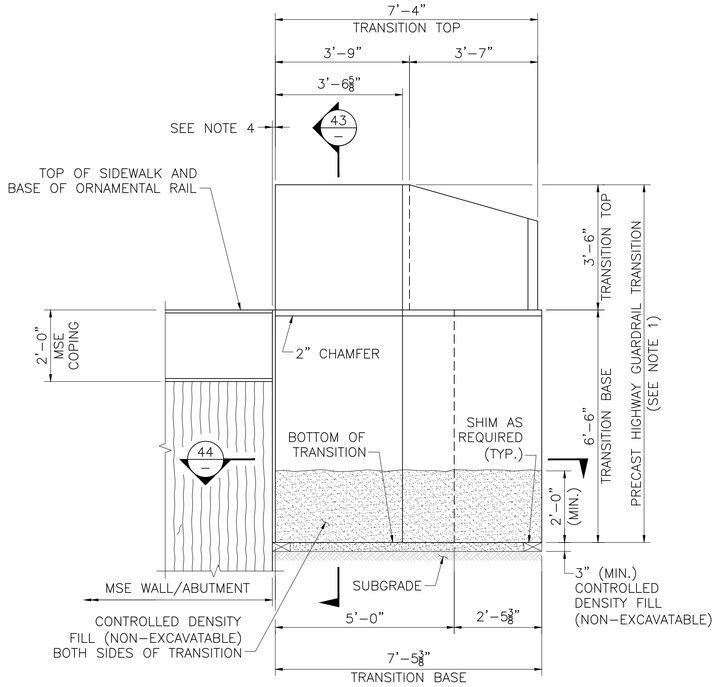

PRECAST GUARDRAIL TRANSITION ELEVATION

SCALE: ½" = 1'-0"

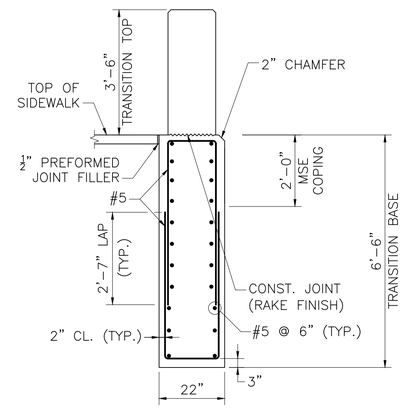

NOTES:

1. 1½" H x 1" D GROOVE. ALIGN WITH GROOVE AT TOP OF STRIATIONS.
2. REINFORCEMENT OF THE TRANSITION TOP IS NOT SHOWN FOR CLARITY.

SECTION 43

SCALE: ½" = 1'-0"

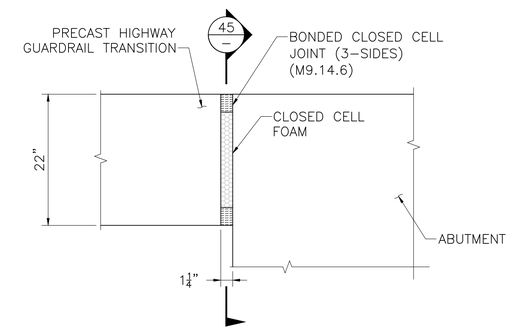

NOTE:
REINFORCEMENT NOT SHOWN FOR CLARITY.

HGT JOINT DETAIL AT ABUTMENT

SCALE: 1" = 1'-0"

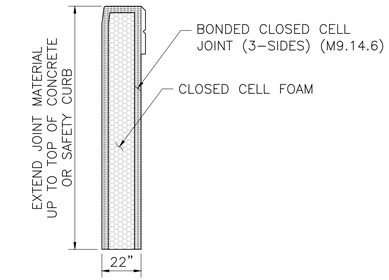

SECTION 45

SCALE: ½" = 1'-0"

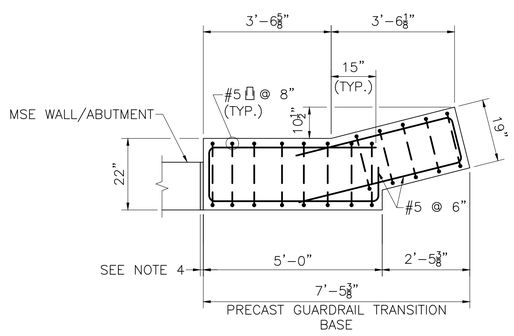

NOTE:
WINGWALL REINFORCEMENT AND STRIATIONS NOT SHOWN FOR CLARITY.

SECTION 44

SCALE: ½" = 1'-0"

NOTES:

1. PRECAST GUARDRAIL TRANSITION SHALL BE 5000 PSI, ¾ IN, 685 HP CEMENT CONCRETE.
2. GRAVEL BORROW SHALL BE PLACED AND THOROUGHLY COMPACTED TO THE GRADE OF 3" (MIN.) BELOW THE INTENDED BOTTOM OF THE PRECAST GUARDRAIL TRANSITION BASE AND TO A HEIGHT OF 2'-0" (MIN.) ON ALL SIDES OF THE TRANSITION BASE TO FORM A TRENCH IN WHICH TO SET THE TRANSITION. WHERE NO GRAVEL BORROW IS REQUIRED BELOW THE BASE, IT SHALL BE PLACED ON UNDISTURBED SOIL.
3. CONTRACTOR SHALL SET THE PRECAST GUARDRAIL TRANSITION TO THE REQUIRED ELEVATION AND ALIGNMENT, AND BACKILL PRECAST GUARDRAIL TRANSITION WITH CONTROLLED DENSITY FILL (NON-EXCAVATABLE) TO THE ELEVATION SHOWN.
4. 1" WIDE BONDED CLOSED CELL FOAM AT END OF MSE WALL. SEE DETAIL, THIS SHEET, FOR JOINT THICKNESS AND DETAIL AT ABUTMENT.

DATE	DESCRIPTION
MONTH DD, YYYY	ISSUED FOR CONSTRUCTION
USE ONLY PRINTS OF LATEST DATE	

PROGRESS PRINT - NOT FOR CONSTRUCTION

\\VHB\GBL\PROJ\WAT-TE\08363.27\CAD\TE604996\BR\DWG\604996_BR(HGT_BOTT).DWG
604996_BR(HGT_BOTT).DWG Plotted on 2-Aug-2020 8:18 PM
Second Structural Submittal (S2) 3-August-2020

WOBURN
NEW BOSTON STREET

STATE	FED. AID PROJ. NO.	SHEET NO.	TOTAL SHEETS
MASS.	TBD	129	147
PROJECT FILE NO. 604996			

CROSS SECTIONS
NEW BOSTON STREET

604996_HD(XSEC).DWG Plotted on 3-Aug-2020 3:55 PM

102+00

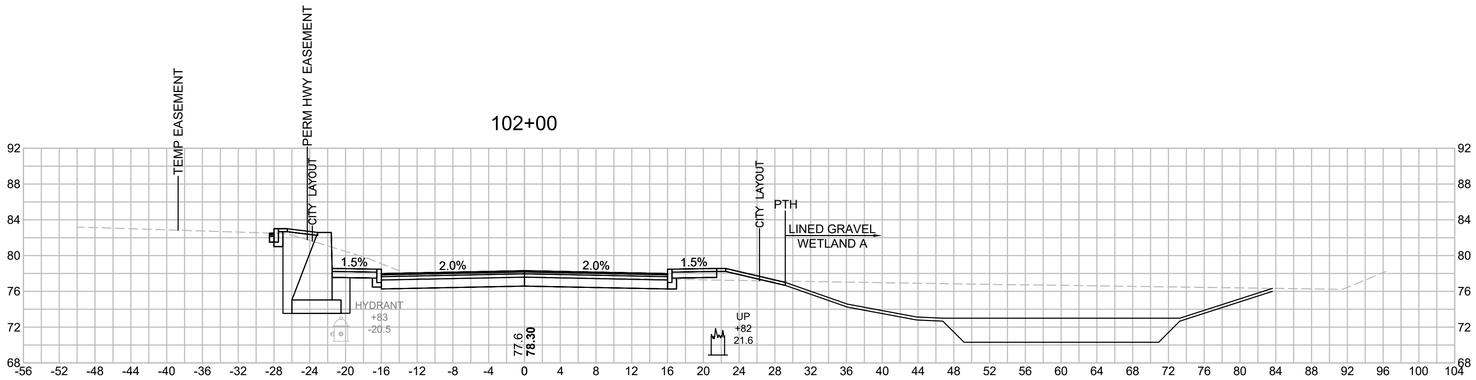

MATERIAL	AREA (SF)
CUT	56.0
FILL	4.1
CLASS A TRENCH	53.1
SPECIAL BORROW	--
ADDITIONAL GRAVEL BORROW	--
GRAVEL FOR BACKFILL	26.1

101+50

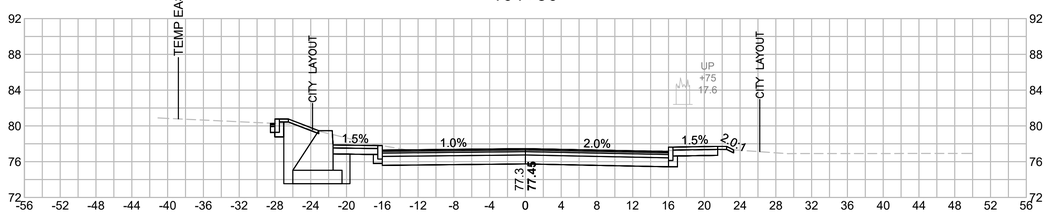

MATERIAL	AREA (SF)
CUT	69.6
FILL	0.1
CLASS A TRENCH	40.1
SPECIAL BORROW	--
ADDITIONAL GRAVEL BORROW	--
GRAVEL FOR BACKFILL	18.8

101+00

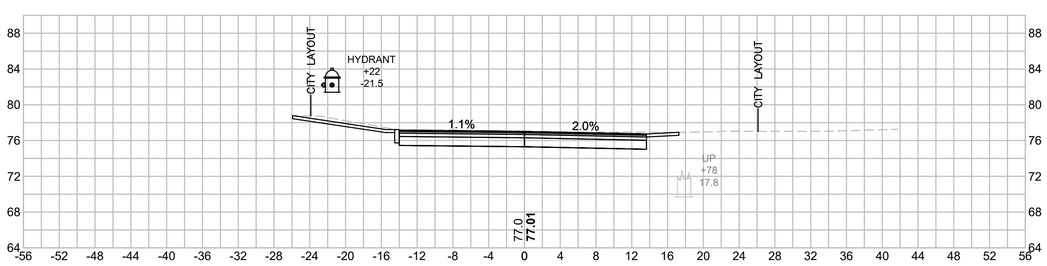

MATERIAL	AREA (SF)
CUT	58.1
FILL	--
CLASS A TRENCH	--
SPECIAL BORROW	--
ADDITIONAL GRAVEL BORROW	--
GRAVEL FOR BACKFILL	--

HOR. SCALE IN FEET
8 0 8 16
8 0 8 16
VER. SCALE IN FEET

WOBURN
NEW BOSTON STREET

STATE	FED. AID PROJ. NO.	SHEET NO.	TOTAL SHEETS
MASS.	TBD	130	147
PROJECT FILE NO. 604996			

CROSS SECTIONS
NEW BOSTON STREET

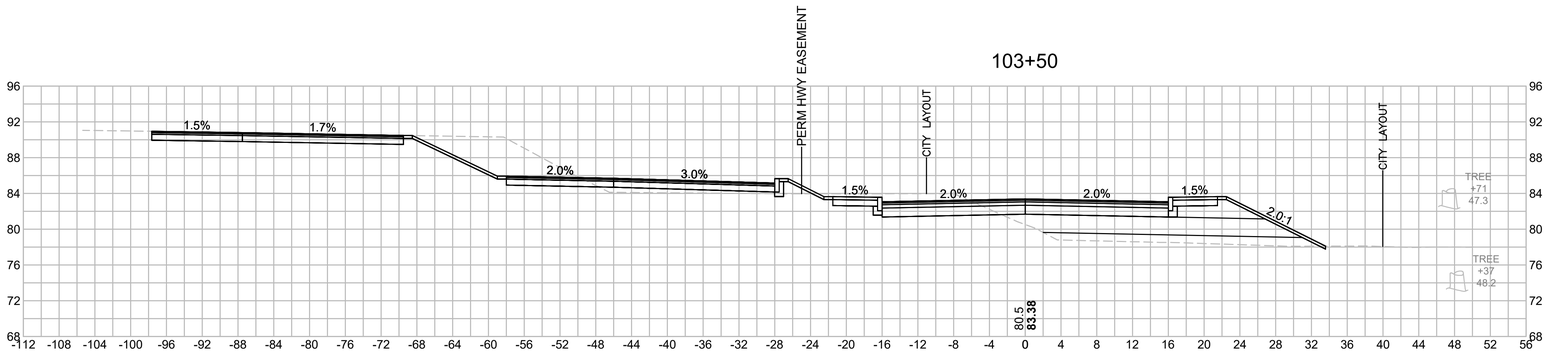

MATERIAL	AREA (SF)
CUT	122.3
FILL	35.7
CLASS A TRENCH	--
SPECIAL BORROW	58.6
ADDITIONAL GRAVEL BORROW	12.5
GRAVEL FOR BACKFILL	--

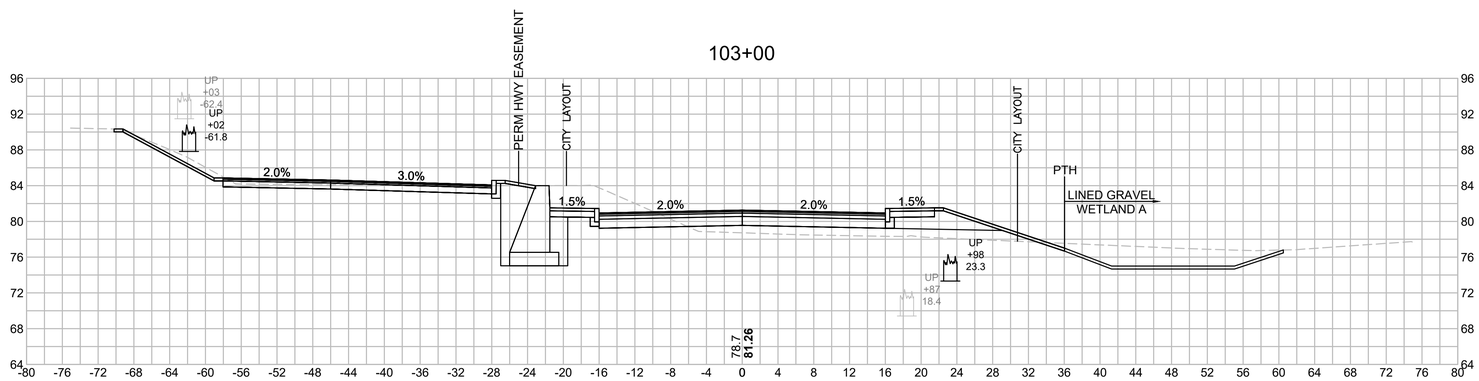

MATERIAL	AREA (SF)
CUT	72.0
FILL	33.2
CLASS A TRENCH	60.2
SPECIAL BORROW	--
ADDITIONAL GRAVEL BORROW	14.9
GRAVEL FOR BACKFILL	29.3

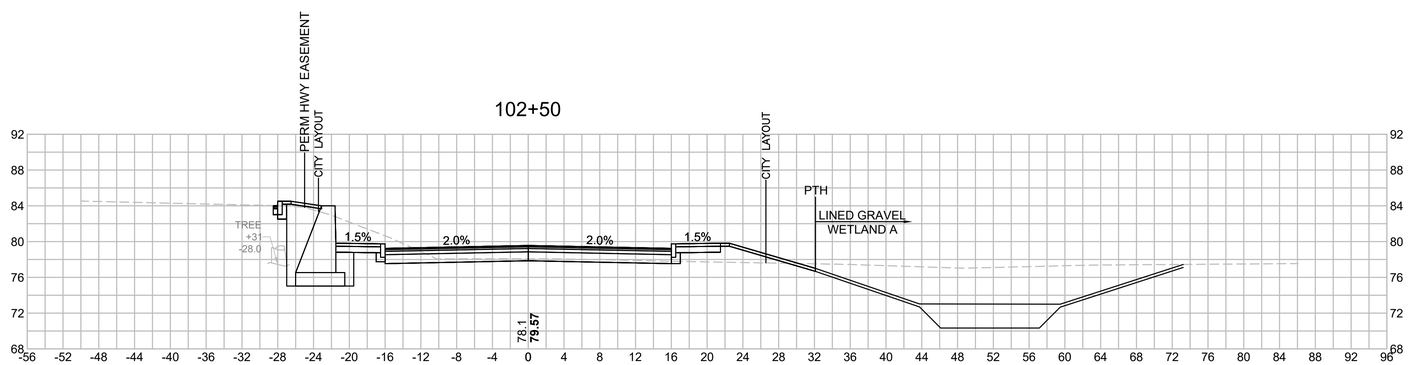

MATERIAL	AREA (SF)
CUT	38.9
FILL	12.4
CLASS A TRENCH	54.2
SPECIAL BORROW	--
ADDITIONAL GRAVEL BORROW	--
GRAVEL FOR BACKFILL	25.7

HOR. SCALE IN FEET
8 0 8 16
8 0 8 16
VER. SCALE IN FEET

604996_HD(XSEC).DWG Plotted on 3-Aug-2020 3:58 PM

WOBURN
NEW BOSTON STREET

STATE	FED. AID PROJ. NO.	SHEET NO.	TOTAL SHEETS
MASS.	TBD	131	147
PROJECT FILE NO. 604996			

CROSS SECTIONS
NEW BOSTON STREET

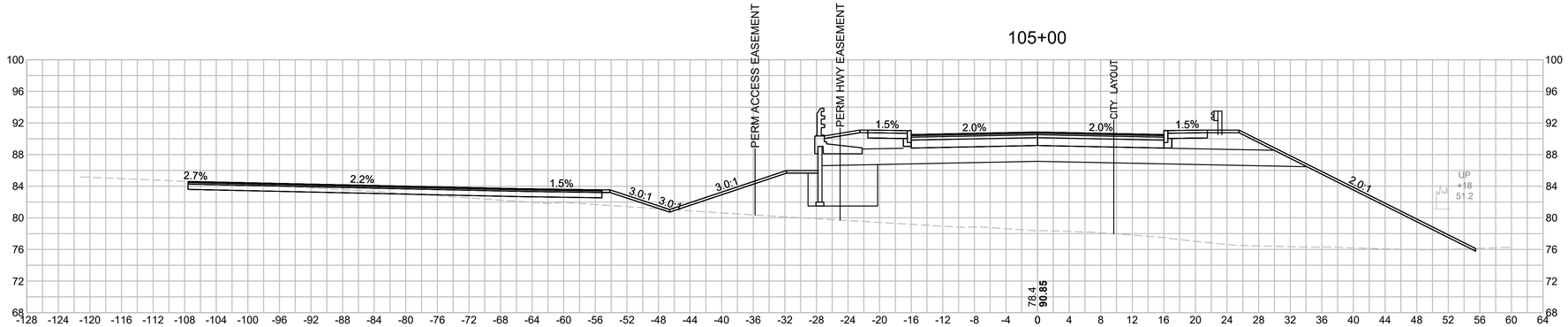

MATERIAL	AREA (SF)
CUT	16.6
FILL	681.2
CLASS A TRENCH	--
SPECIAL BORROW	115.9
ADDITIONAL GRAVEL BORROW	32.6
GRAVEL FOR BACKFILL	--

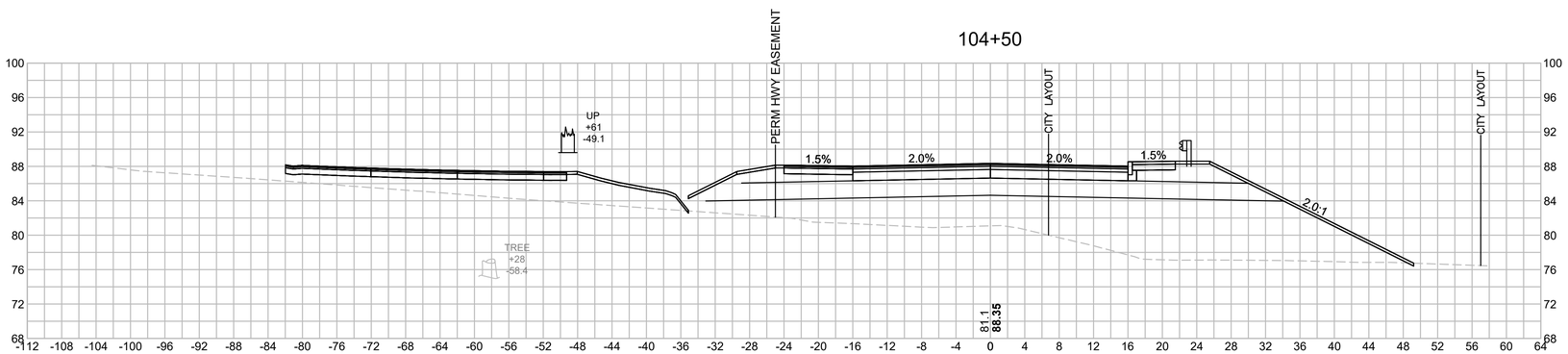

MATERIAL	AREA (SF)
CUT	0.5
FILL	446.5
CLASS A TRENCH	--
SPECIAL BORROW	131.4
ADDITIONAL GRAVEL BORROW	34.5
GRAVEL FOR BACKFILL	--

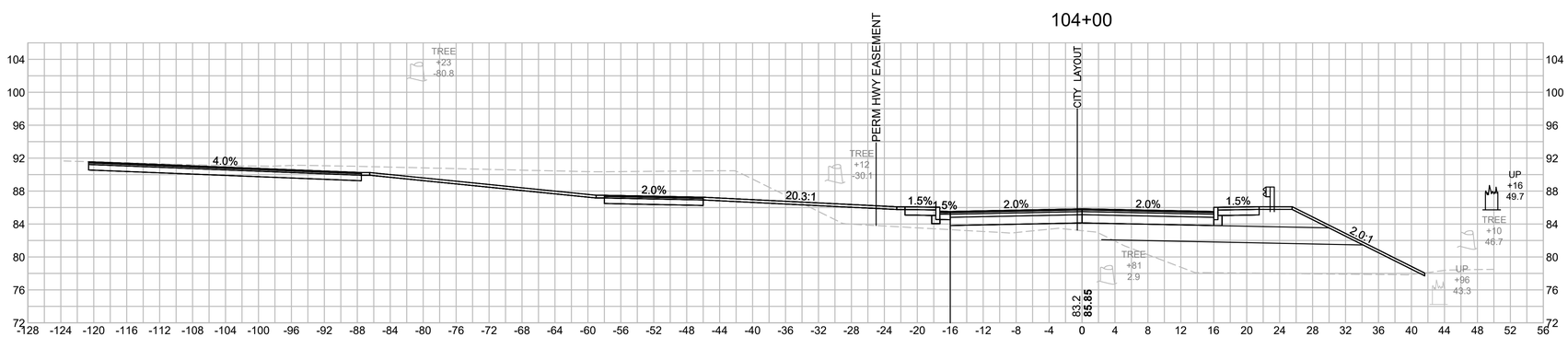

MATERIAL	AREA (SF)
CUT	184.6
FILL	130.6
CLASS A TRENCH	--
SPECIAL BORROW	76.8
ADDITIONAL GRAVEL BORROW	19.1
GRAVEL FOR BACKFILL	--

HOR. SCALE IN FEET
8 0 8 16
8 0 8 16
VER. SCALE IN FEET

604996_HD(XSEC).DWG Plotted on 3-Aug-2020 4:00 PM

WOBURN
NEW BOSTON STREET

STATE	FED. AID PROJ. NO.	SHEET NO.	TOTAL SHEETS
MASS.	TBD	132	147
PROJECT FILE NO. 604996			

CROSS SECTIONS
NEW BOSTON STREET

604996_HD(XSEC).DWG Plotted on 3-Aug-2020 4:02 PM

106+00

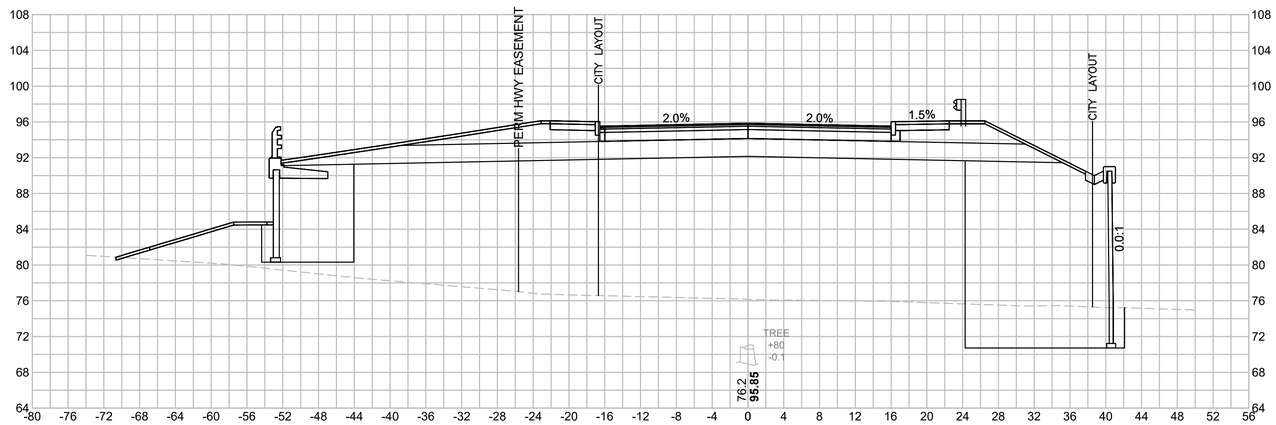

MATERIAL	AREA (SF)
CUT	0.2
FILL	1086.7
CLASS A TRENCH	--
SPECIAL BORROW	159.0
ADDITIONAL GRAVEL BORROW	49.9
GRAVEL FOR BACKFILL	--

105+50

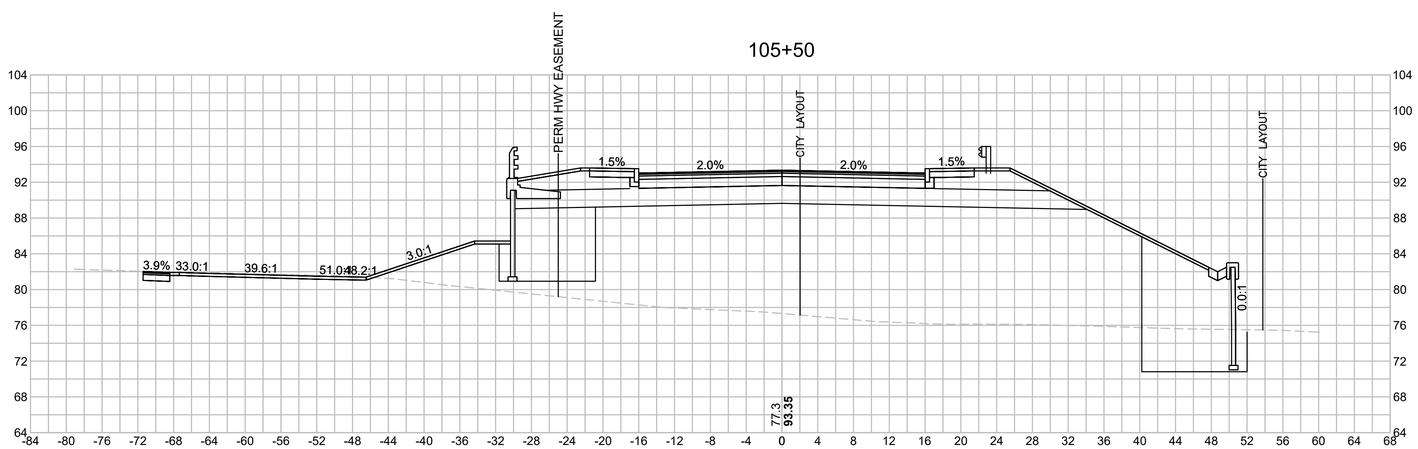

MATERIAL	AREA (SF)
CUT	11.8
FILL	809.8
CLASS A TRENCH	--
SPECIAL BORROW	119.3
ADDITIONAL GRAVEL BORROW	37.4
GRAVEL FOR BACKFILL	--

HOR. SCALE IN FEET
8 0 8 16
8 0 8 16
VER. SCALE IN FEET

WOBURN
NEW BOSTON STREET

STATE	FED. AID PROJ. NO.	SHEET NO.	TOTAL SHEETS
MASS.	TBD	133	147
PROJECT FILE NO. 604996			

CROSS SECTIONS
NEW BOSTON STREET

604996_HD(XSEC).DWG Plotted on 3-Aug-2020 4:04 PM

107+00

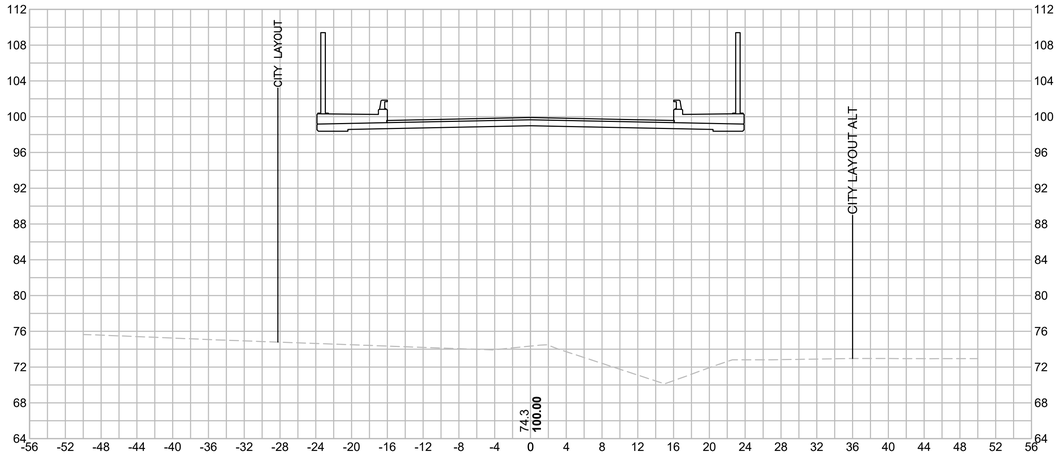

108+00

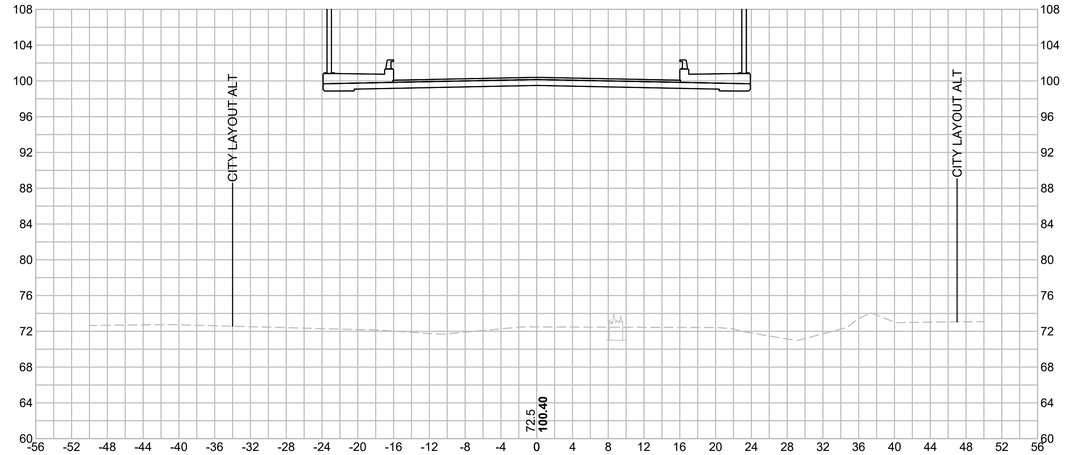

MATERIAL	AREA (SF)
CUT	--
FILL	381.0
CLASS A TRENCH	--
SPECIAL BORROW	35.5
ADDITIONAL GRAVEL BORROW	--
GRAVEL FOR BACKFILL	--

106+50

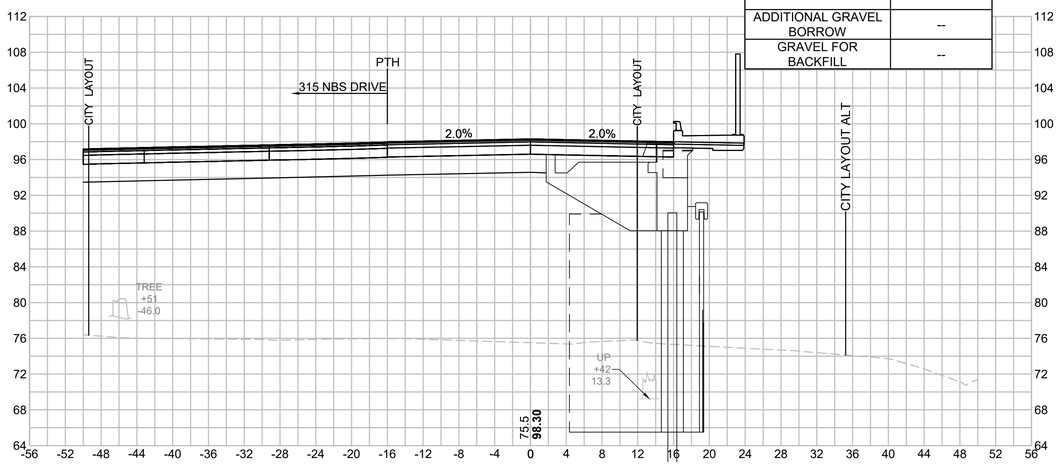

107+50

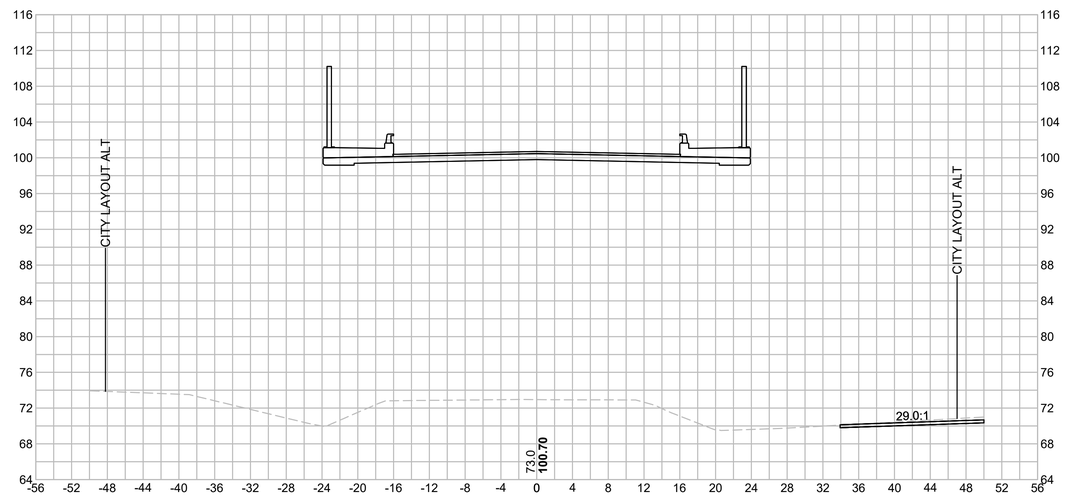

HOR. SCALE IN FEET
8 0 8 16
8 0 8 16
VER. SCALE IN FEET

WOBURN
NEW BOSTON STREET

STATE	FED. AID PROJ. NO.	SHEET NO.	TOTAL SHEETS
MASS.	TBD	134	147
PROJECT FILE NO. 604996			

CROSS SECTIONS
NEW BOSTON STREET

604996_HD(XSEC).DWG Plotted on 3-Aug-2020 4:06 PM

108+50

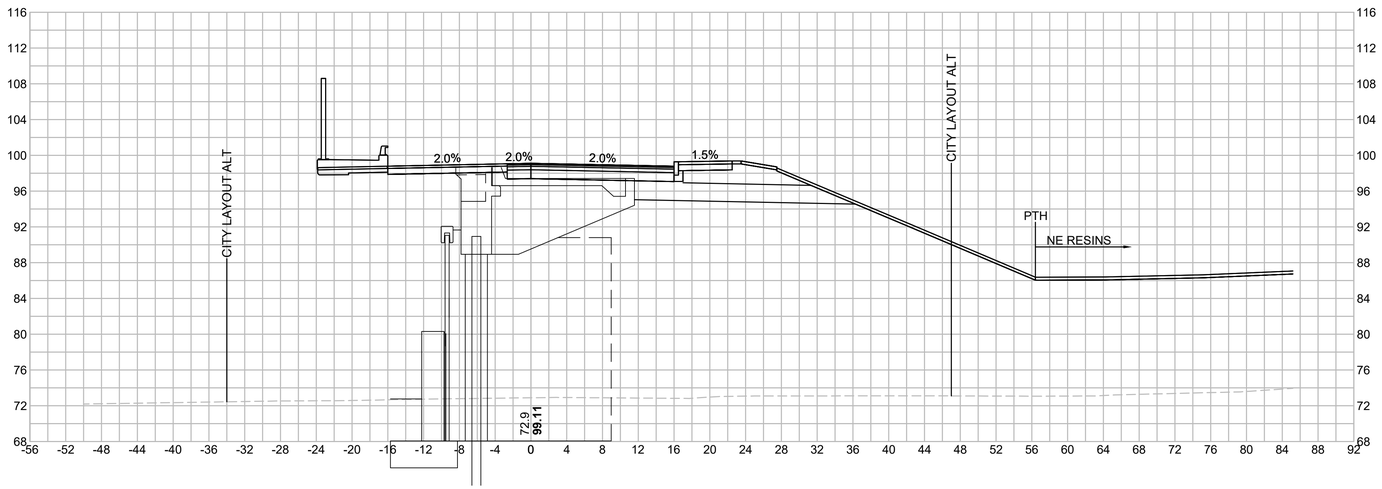

MATERIAL	AREA (SF)
CUT	--
FILL	946.2
CLASS A TRENCH	--
SPECIAL BORROW	44.4
ADDITIONAL GRAVEL BORROW	19.6
GRAVEL FOR BACKFILL	--

108+25

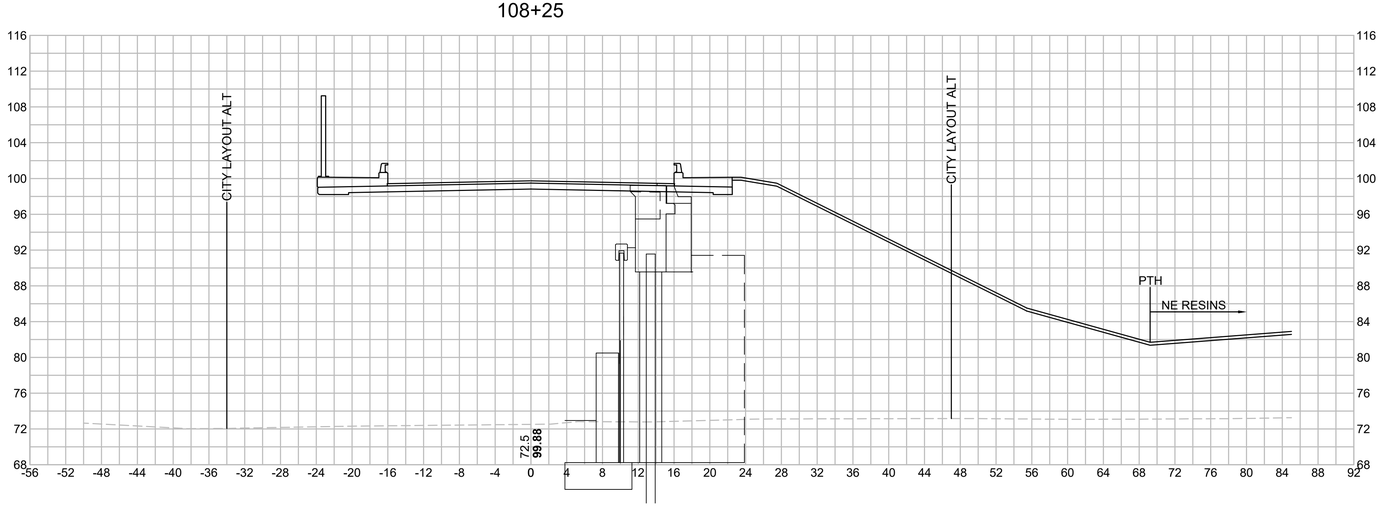

MATERIAL	AREA (SF)
CUT	--
FILL	810.8
CLASS A TRENCH	--
SPECIAL BORROW	--
ADDITIONAL GRAVEL BORROW	--
GRAVEL FOR BACKFILL	--

HOR. SCALE IN FEET
8 0 8 16
8 0 8 16
VER. SCALE IN FEET

WOBURN
NEW BOSTON STREET

STATE	FED. AID PROJ. NO.	SHEET NO.	TOTAL SHEETS
MASS.	TBD	135	147
PROJECT FILE NO. 604996			

CROSS SECTIONS
NEW BOSTON STREET

604996_HD(XSEC).DWG Plotted on 3-Aug-2020 4:08 PM

109+00

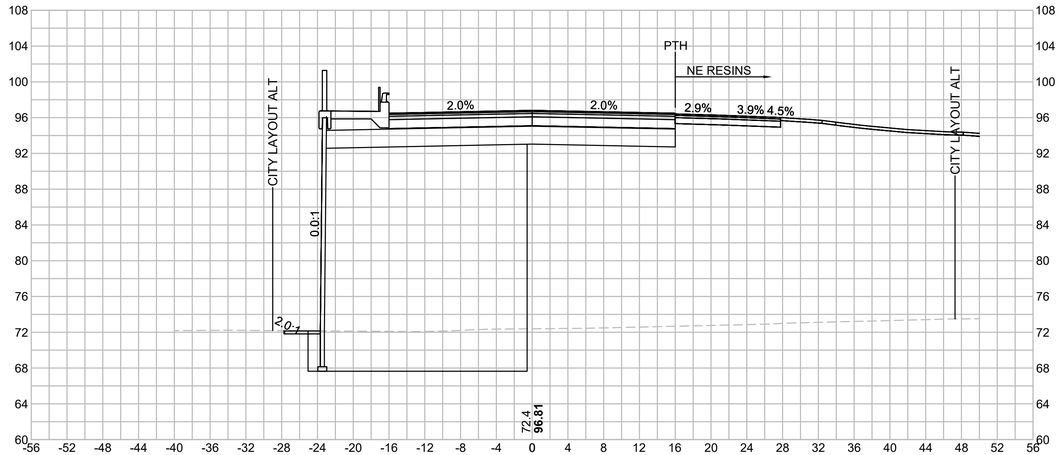

MATERIAL	AREA (SF)
CUT	--
FILL	337.5
CLASS A TRENCH	--
SPECIAL BORROW	78.0
ADDITIONAL GRAVEL BORROW	6.1
GRAVEL FOR BACKFILL	--

108+75

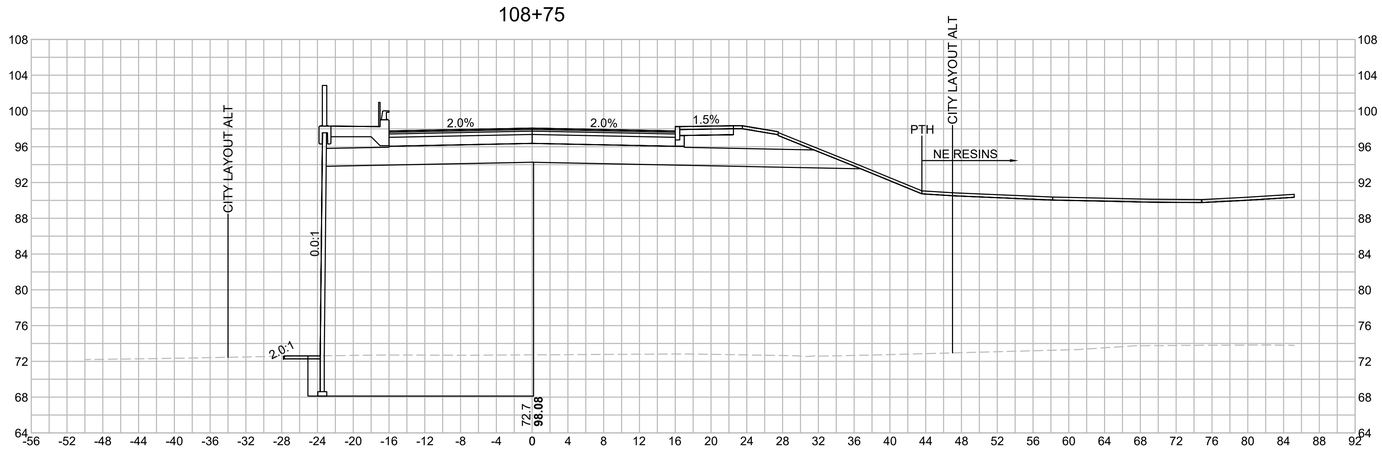

MATERIAL	AREA (SF)
CUT	--
FILL	906.7
CLASS A TRENCH	--
SPECIAL BORROW	114.4
ADDITIONAL GRAVEL BORROW	25.9
GRAVEL FOR BACKFILL	--

HOR. SCALE IN FEET
8 0 8 16
8 0 8 16
VER. SCALE IN FEET

WOBURN
NEW BOSTON STREET

STATE	FED. AID PROJ. NO.	SHEET NO.	TOTAL SHEETS
MASS.	TBD	136	147
PROJECT FILE NO. 604996			

CROSS SECTIONS
NEW BOSTON STREET

604996_HD(XSEC).DWG Plotted on 3-Aug-2020 4:10 PM

110+00

MATERIAL	AREA (SF)
CUT	8.2
FILL	150.6
MSE WALL EXCAVATION	94.6
SPECIAL BORROW	92.1
ADDITIONAL GRAVEL BORROW	12.3
GRAVEL FOR BACKFILL	--

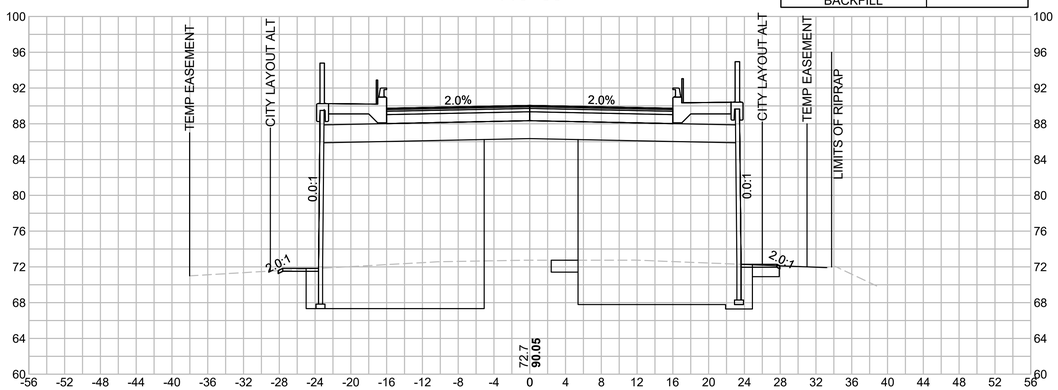

111+00

MATERIAL	AREA (SF)
CUT	8.2
FILL	151.3
MSE WALL EXCAVATION	67.8
SPECIAL BORROW	92.1
ADDITIONAL GRAVEL BORROW	12.3
GRAVEL FOR BACKFILL	--
CLASS C SOIL EXCAVATION	49.2

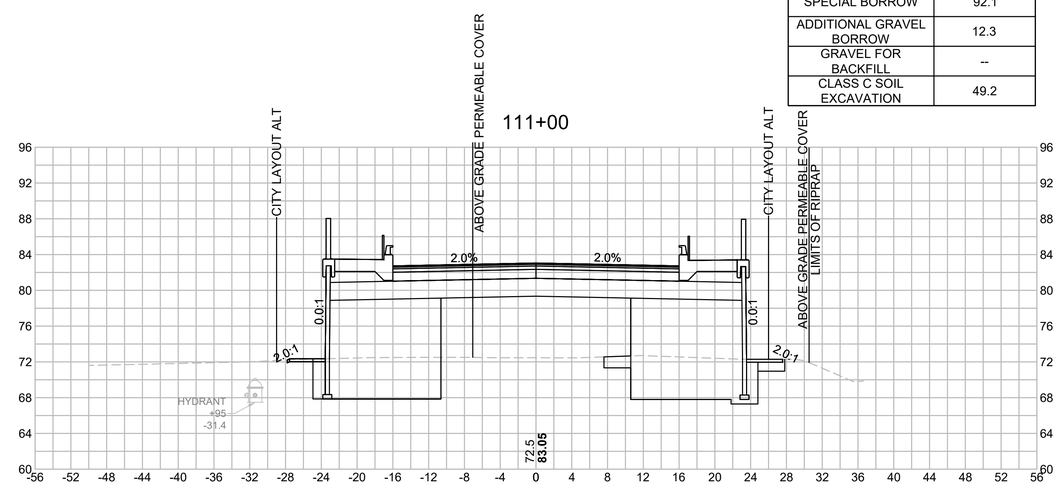

109+50

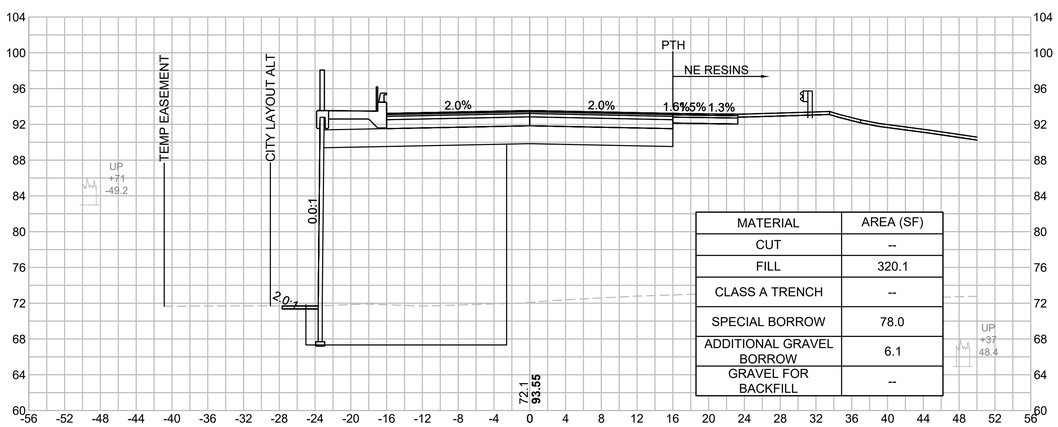

MATERIAL	AREA (SF)
CUT	--
FILL	320.1
CLASS A TRENCH	--
SPECIAL BORROW	78.0
ADDITIONAL GRAVEL BORROW	6.1
GRAVEL FOR BACKFILL	--

110+50

MATERIAL	AREA (SF)
CUT	8.4
FILL	172.8
MSE WALL EXCAVATION	79.1
SPECIAL BORROW	92.1
ADDITIONAL GRAVEL BORROW	12.2
GRAVEL FOR BACKFILL	--
CLASS C SOIL EXCAVATION	57.3

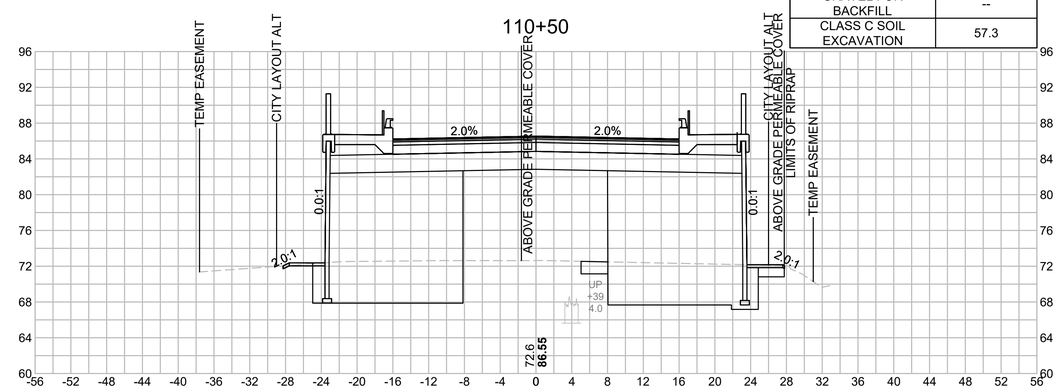

HOR. SCALE IN FEET
8 0 8 16
8 0 8 16
VER. SCALE IN FEET

WOBURN
NEW BOSTON STREET

STATE	FED. AID PROJ. NO.	SHEET NO.	TOTAL SHEETS
MASS.	TBD	137	147
PROJECT FILE NO. 604996			

CROSS SECTIONS
NEW BOSTON STREET

112+50

MATERIAL	AREA (SF)
CUT	25.5
FILL	11.1
SPECIAL BORROW	3.3
ADDITIONAL GRAVEL BORROW	6.2
MSE WALL EXCAVATION	29.6
CLASS C SOIL EXCAVATION	29.9

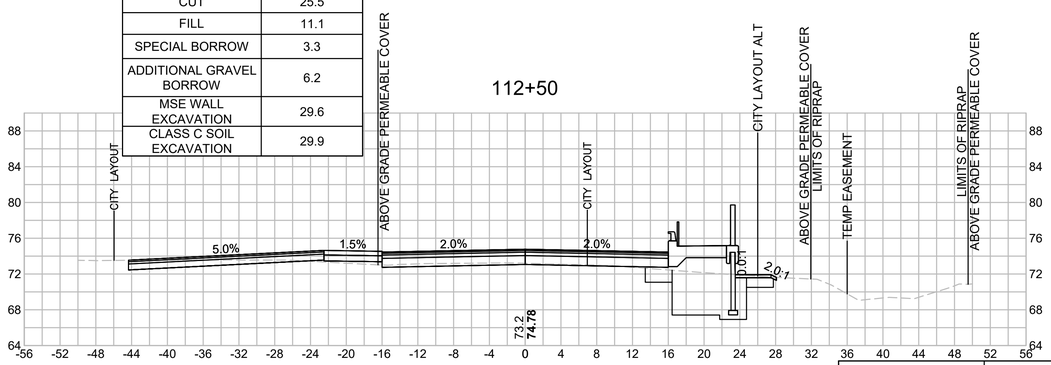

113+50

MATERIAL	AREA (SF)
CUT	72.7
FILL	1.0
CLASS C SOIL EXCAVATION	8.5

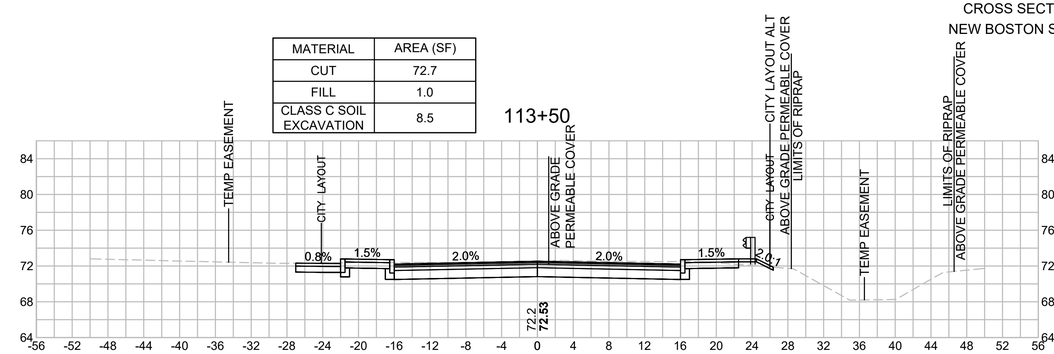

112+00

MATERIAL	AREA (SF)
CUT	8.6
FILL	17.5
SPECIAL BORROW	92.8
ADDITIONAL GRAVEL BORROW	31.5
MSE WALL EXCAVATION	47.9
CLASS C SOIL EXCAVATION	35.3

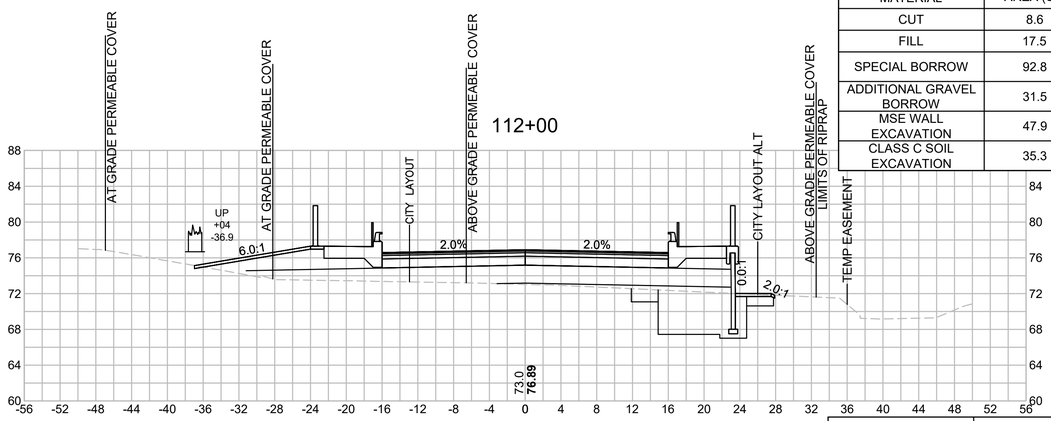

113+00

MATERIAL	AREA (SF)
CUT	58.8
FILL	5.6
CLASS C SOIL EXCAVATION	4.4

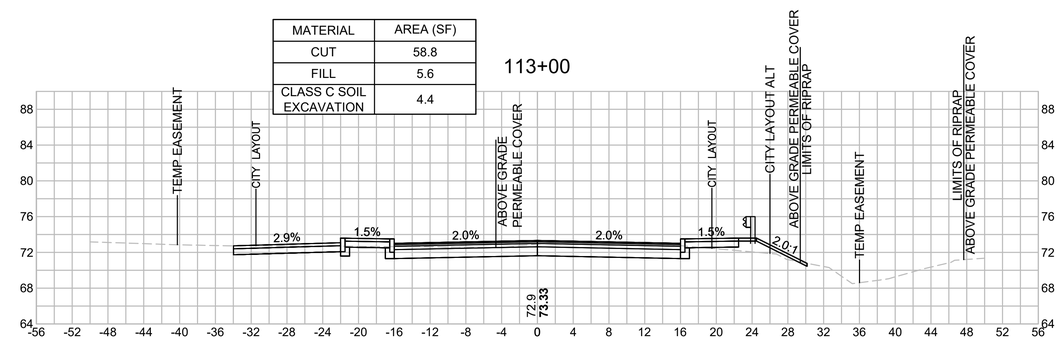

111+50

MATERIAL	AREA (SF)
CUT	7.9
FILL	189.1
SPECIAL BORROW	137.2
ADDITIONAL GRAVEL BORROW	31.4
MSE WALL EXCAVATION	56.6
CLASS C SOIL EXCAVATION	41.2

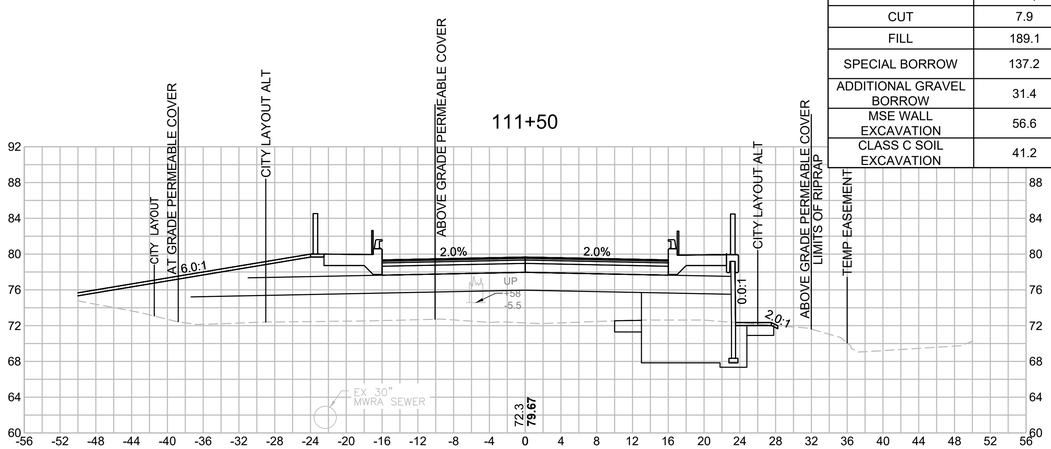

112+62

MATERIAL	AREA (SF)
CUT	27.3
FILL	18.6

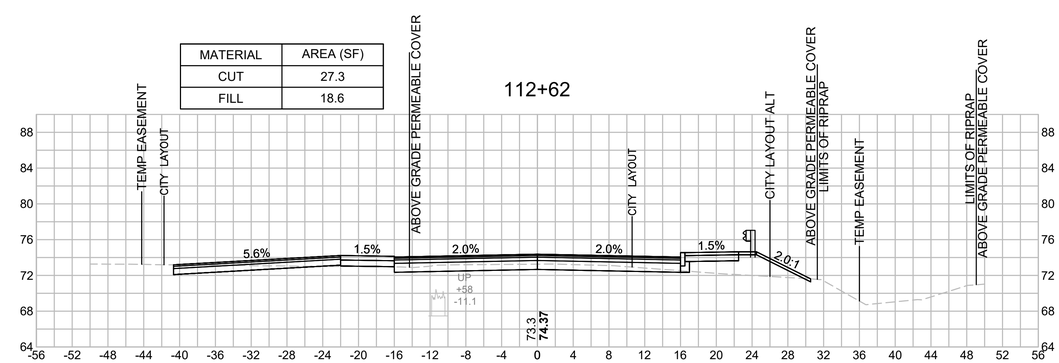

HOR. SCALE IN FEET
8 0 8 16
8 0 8 16
VER. SCALE IN FEET

604996_HD(XSEC).DWG Plotted on 3-Aug-2020 4:12 PM

WOBURN
NEW BOSTON STREET

STATE	FED. AID PROJ. NO.	SHEET NO.	TOTAL SHEETS
MASS.	TBD	138	147
PROJECT FILE NO. 604996			

CROSS SECTIONS
NEW BOSTON STREET

604996_HD(XSEC).DWG Plotted on 3-Aug-2020 4:15 PM

114+25

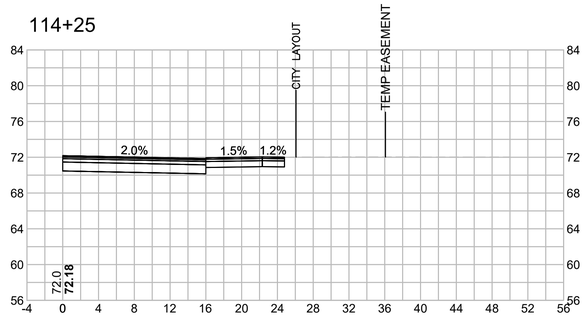

115+50

MATERIAL	AREA (SF)
CUT	39.4
FILL	0.9
CLASS C SOIL EXCAVATION	1.9

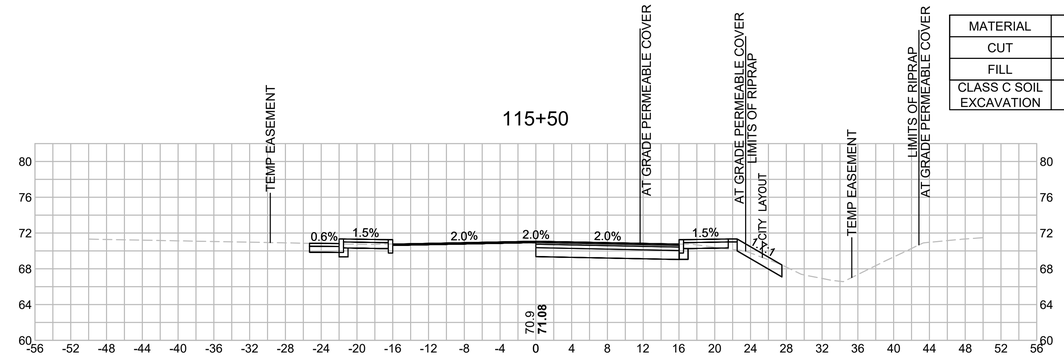

114+00

MATERIAL	AREA (SF)
CUT	71.2
FILL	0.8
CLASS C SOIL EXCAVATION	19.6

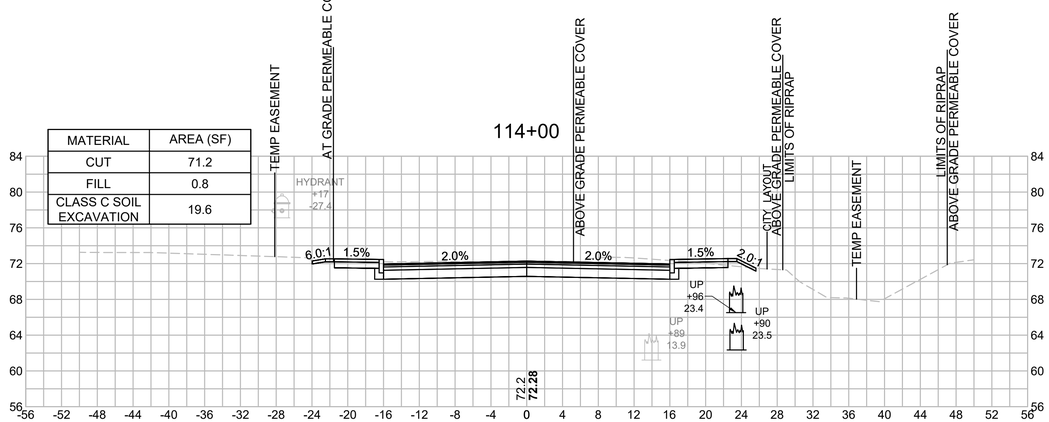

115+00

MATERIAL	AREA (SF)
CUT	39.8
FILL	1.3
CLASS C SOIL EXCAVATION	6.5

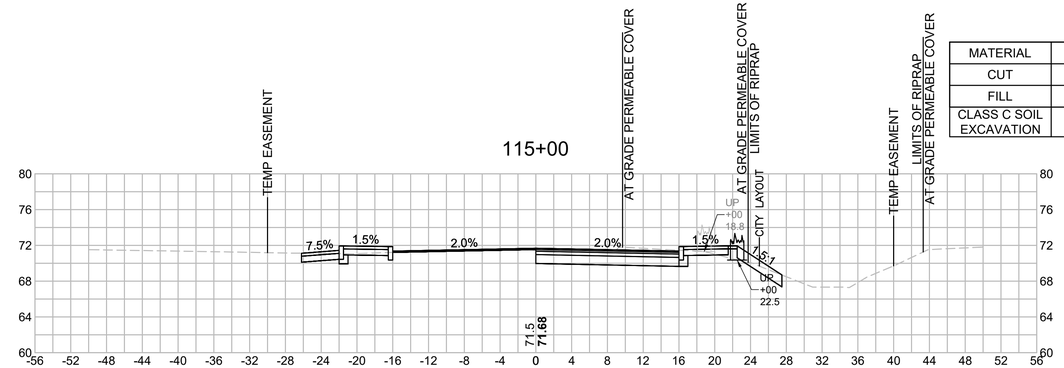

113+62

MATERIAL	AREA (SF)
CUT	79.7
FILL	0.6
CLASS C SOIL EXCAVATION	11.3

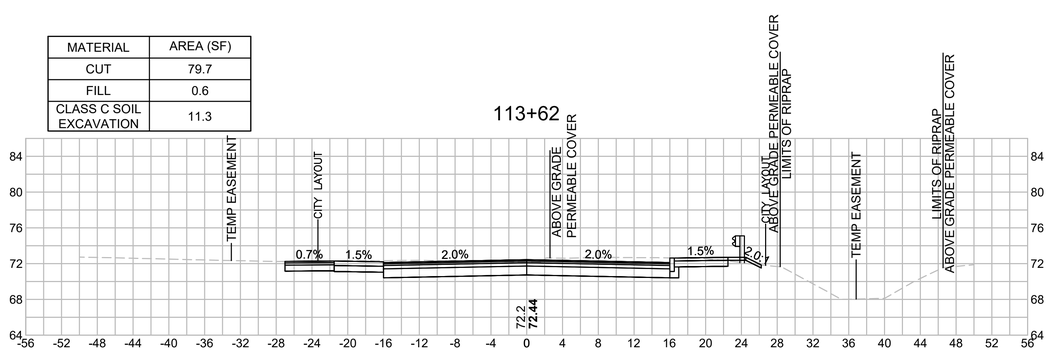

114+50

MATERIAL	AREA (SF)
CUT	70.11
FILL	0.00

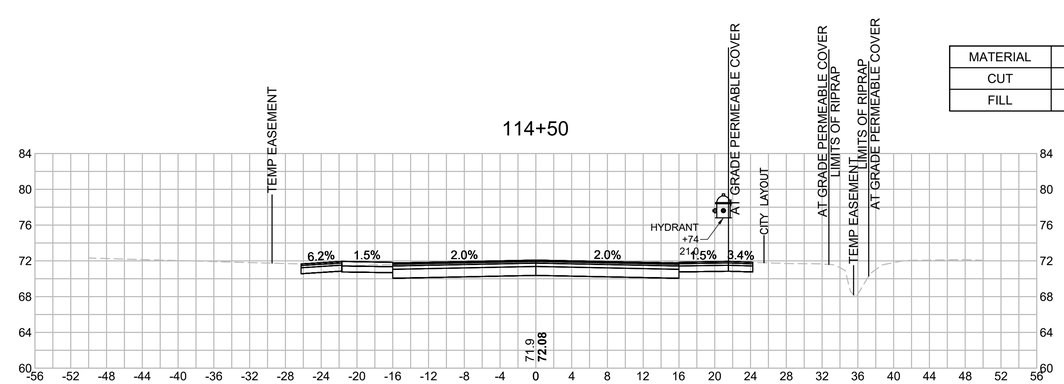

HOR. SCALE IN FEET
8 0 8 16
8 0 8 16
VER. SCALE IN FEET

WOBURN
NEW BOSTON STREET

STATE	FED. AID PROJ. NO.	SHEET NO.	TOTAL SHEETS
MASS.	TBD	139	147
PROJECT FILE NO. 604996			

CROSS SECTIONS
NEW BOSTON STREET

604996_HD(XSEC).DWG Plotted on 3-Aug-2020 4:17 PM

116+50

MATERIAL	AREA (SF)
CUT	43.4
FILL	1.0
CLASS C SOIL EXCAVATION	2.1

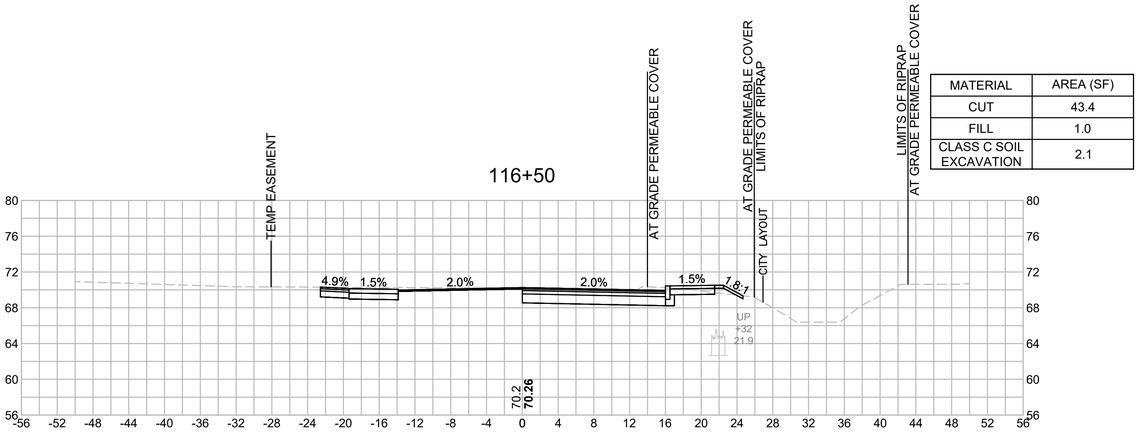

117+50

MATERIAL	AREA (SF)
CUT	0.00
FILL	0.00

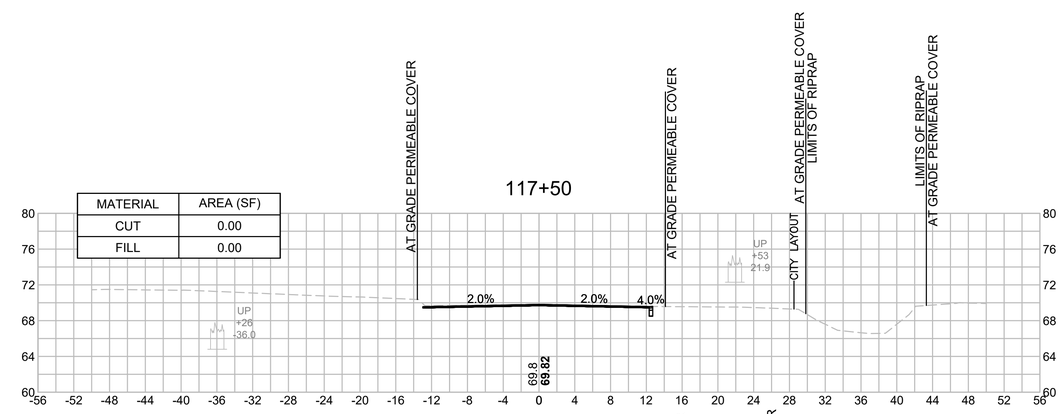

116+00

MATERIAL	AREA (SF)
CUT	46.6
FILL	0.7
CLASS C SOIL EXCAVATION	2.3

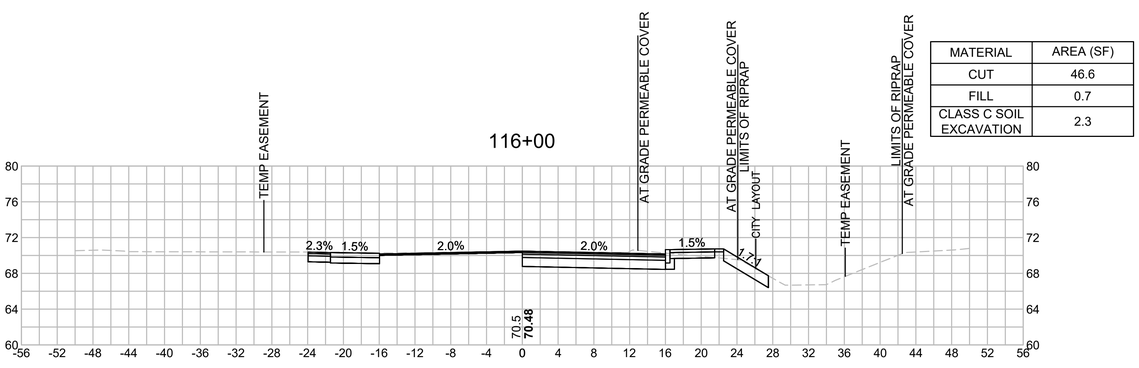

117+00

MATERIAL	AREA (SF)
CUT	36.5
FILL	0.0
CLASS C SOIL EXCAVATION	7.8

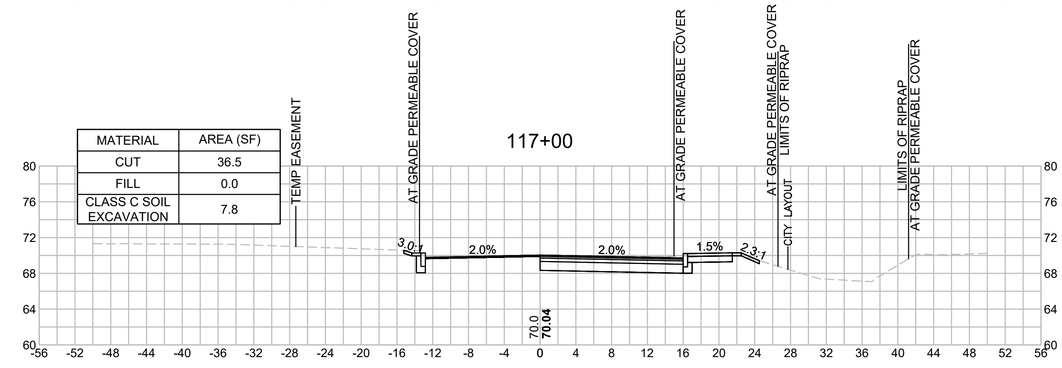

HOR. SCALE IN FEET
8 0 8 16
8 0 8 16
VER. SCALE IN FEET

WOBURN
NEW BOSTON STREET

STATE	FED. AID PROJ. NO.	SHEET NO.	TOTAL SHEETS
MASS.	TBD	140	147
PROJECT FILE NO. 604996			

CROSS SECTIONS
315 NBS DRIVEWAY

604996_HD(XSEC).DWG Plotted on 3-Aug-2020 4:19 PM

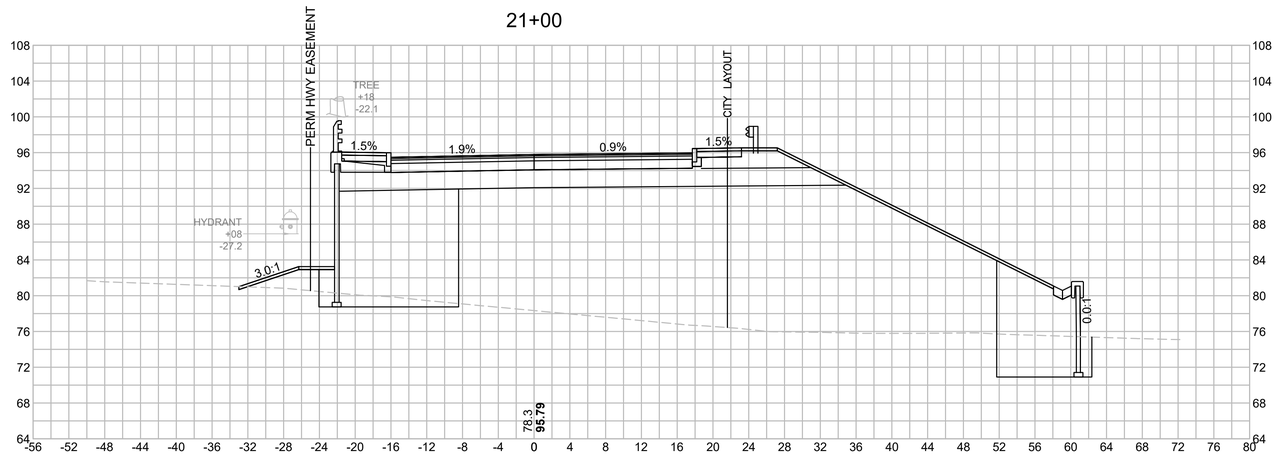

MATERIAL	AREA (SF)
CUT	0.2
FILL	867.0
SPECIAL BORROW	110.0
ADDITIONAL GRAVEL BORROW	16.9

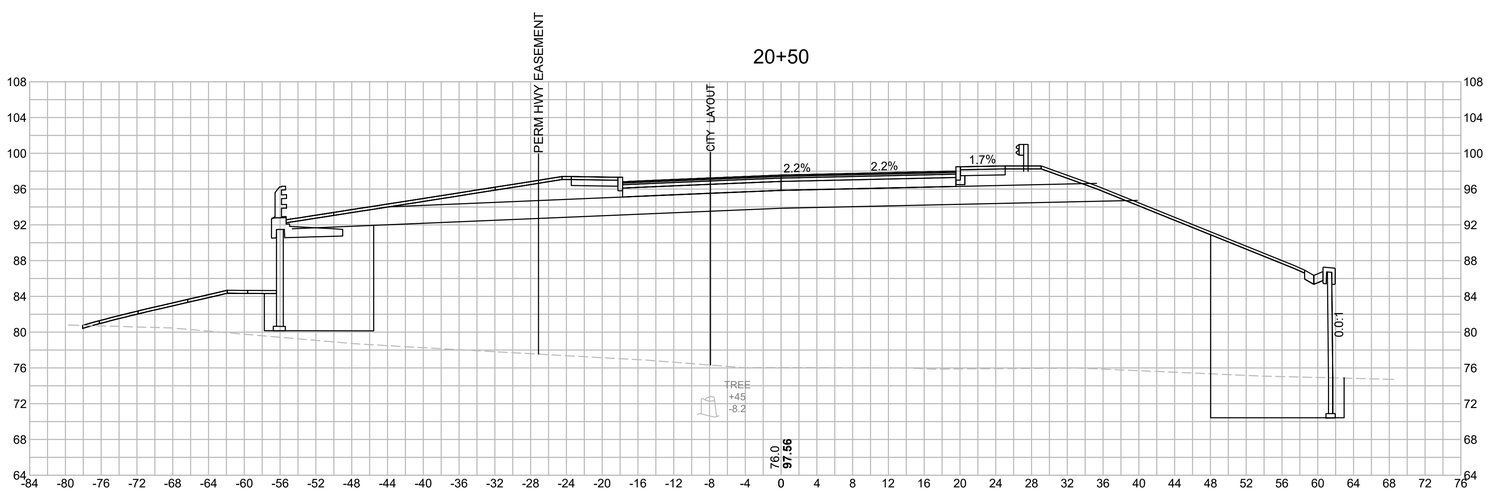

MATERIAL	AREA (SF)
CUT	0.2
FILL	1647.1
SPECIAL BORROW	174.9
ADDITIONAL GRAVEL BORROW	48.3

HOR. SCALE IN FEET
8 0 8 16
8 0 8 16
VER. SCALE IN FEET

WOBURN
NEW BOSTON STREET

STATE	FED. AID PROJ. NO.	SHEET NO.	TOTAL SHEETS
MASS.	TBD	141	147
PROJECT FILE NO. 604996			

CROSS SECTIONS
315 NBS DRIVEWAY

604996_HD(XSEC).DWG Plotted on 3-Aug-2020 4:21 PM

22+50

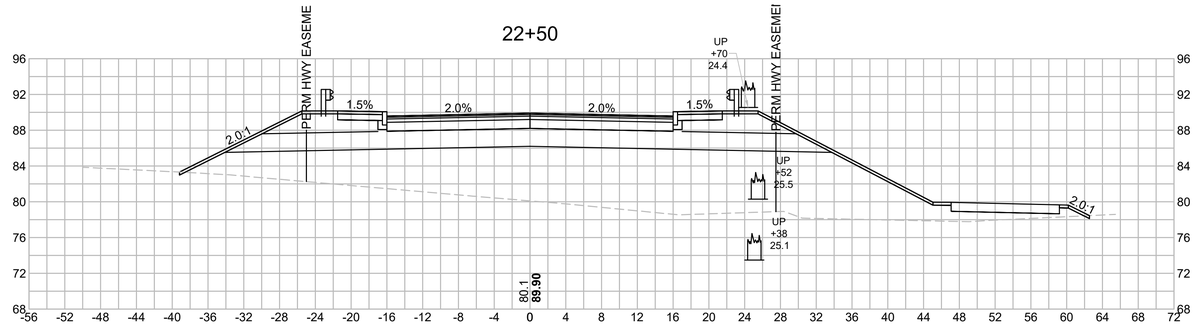

MATERIAL	AREA (SF)
CUT	0.2
FILL	451.6
SPECIAL BORROW	127.6
ADDITIONAL GRAVEL BORROW	38.0
CLASS B SOIL EXCAVATION	0.2

22+00

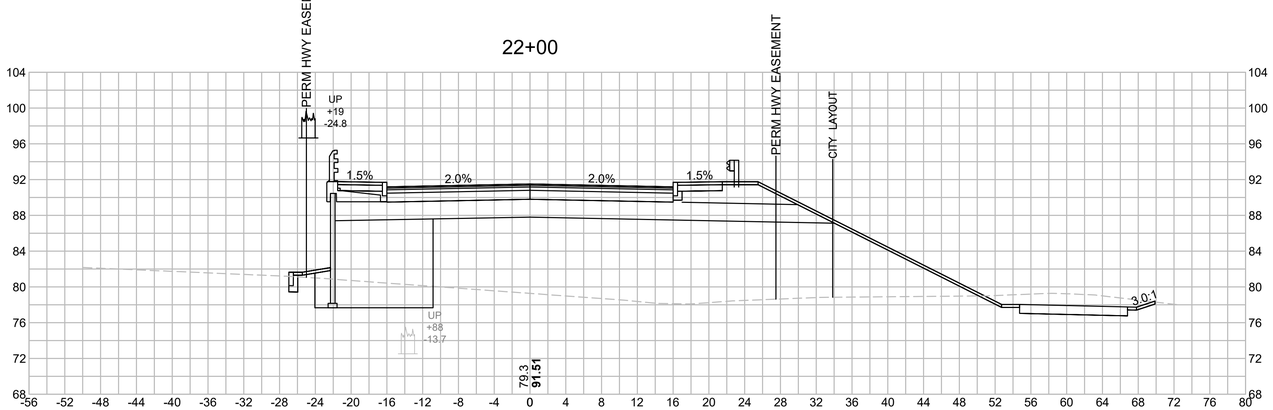

MATERIAL	AREA (SF)
CUT	35.5
FILL	454.4
SPECIAL BORROW	107.8
ADDITIONAL GRAVEL BORROW	19.0

21+50

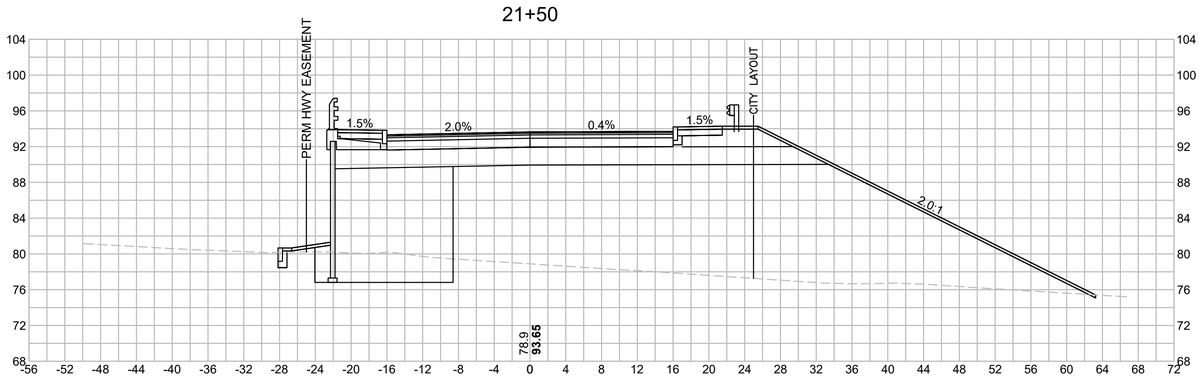

MATERIAL	AREA (SF)
CUT	1.9
FILL	686.6
SPECIAL BORROW	106.6
ADDITIONAL GRAVEL BORROW	17.3

HOR. SCALE IN FEET
8 0 8 16
8 0 8 16
VER. SCALE IN FEET

WOBURN
NEW BOSTON STREET

STATE	FED. AID PROJ. NO.	SHEET NO.	TOTAL SHEETS
MASS.	TBD	142	147
PROJECT FILE NO. 604996			

CROSS SECTIONS
315 NBS DRIVEWAY

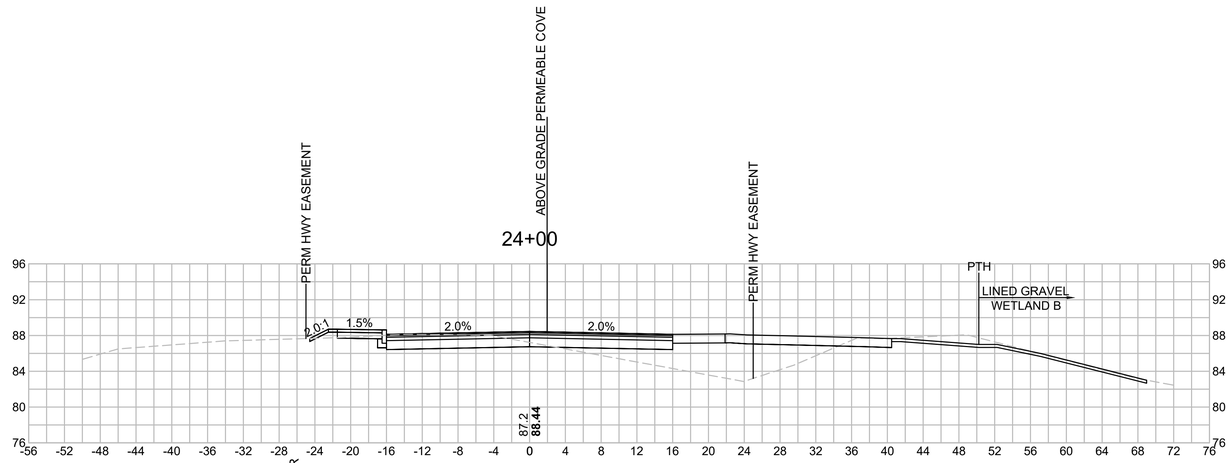

MATERIAL	AREA (SF)
CUT	38.1
FILL	66.9
CLASS B SOIL EXCAVATION	35.7
CLASS C SOIL EXCAVATION	2.4

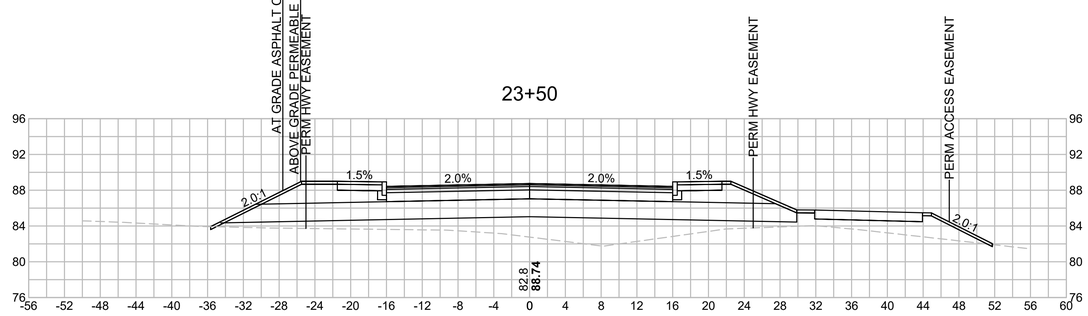

MATERIAL	AREA (SF)
CLASS B SOIL EXCAVATION	0.2
FILL	121.8
SPECIAL BORROW	122.6
ADDITIONAL GRAVEL BORROW	32.3
CLASS B SOIL EXCAVATION	0.2

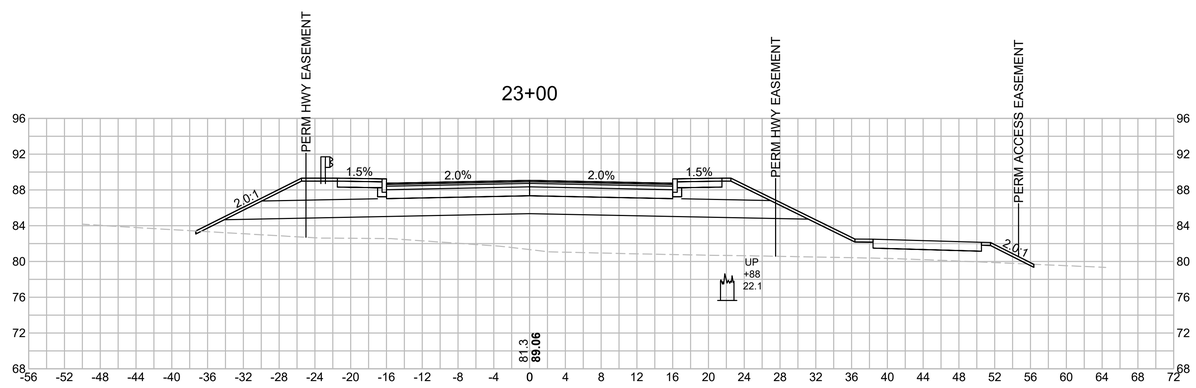

MATERIAL	AREA (SF)
CLASS B SOIL EXCAVATION	0.2
FILL	260.7
SPECIAL BORROW	122.2
ADDITIONAL GRAVEL BORROW	31.7
CLASS B SOIL EXCAVATION	0.2

HOR. SCALE IN FEET
8 0 8 16
8 0 8 16
VER. SCALE IN FEET

604996_HD(XSEC).DWG Plotted on 3-Aug-2020 4:23 PM

WOBURN
NEW BOSTON STREET

STATE	FED. AID PROJ. NO.	SHEET NO.	TOTAL SHEETS
MASS.	TBD	143	147
PROJECT FILE NO. 604996			

CROSS SECTIONS
315 NBS DRIVEWAY

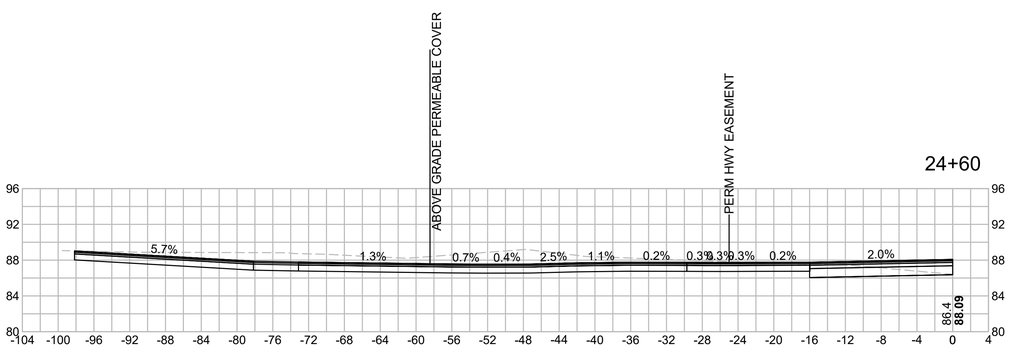

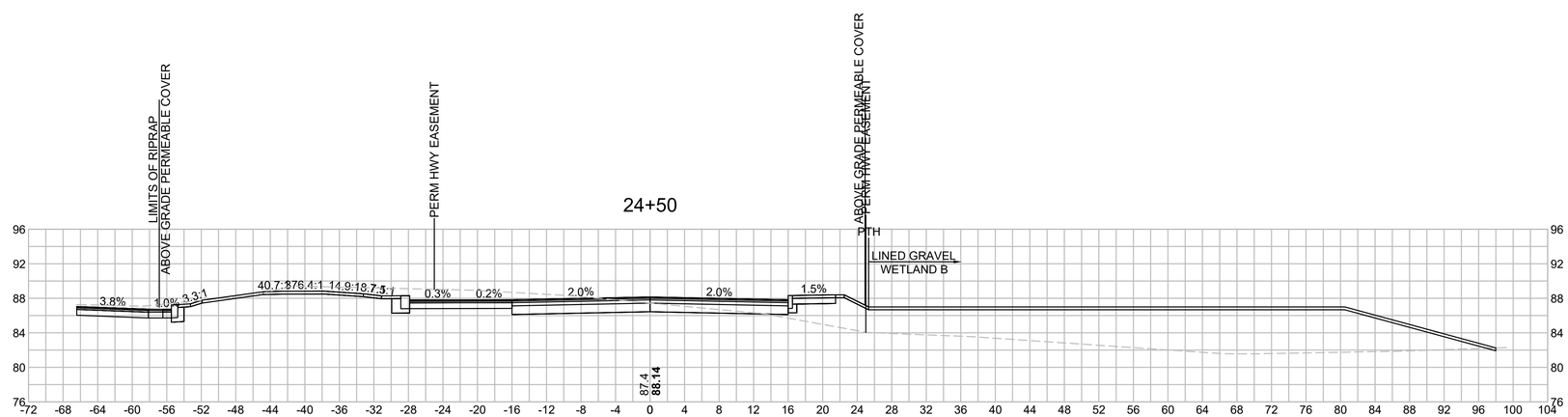

MATERIAL	AREA (SF)
CUT	101.7
FILL	23.4
CLASS B SOIL EXCAVATION	101.4
CLASS C SOIL EXCAVATION	0.2

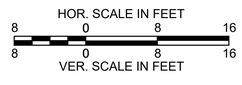

604996_HD(XSEC).DWG Plotted on 3-Aug-2020 4:25 PM

WOBURN
NEW BOSTON STREET

STATE	FED. AID PROJ. NO.	SHEET NO.	TOTAL SHEETS
MASS.	TBD	144	147
PROJECT FILE NO. 604996			

CROSS SECTIONS
NE RESINS DRIVEWAY

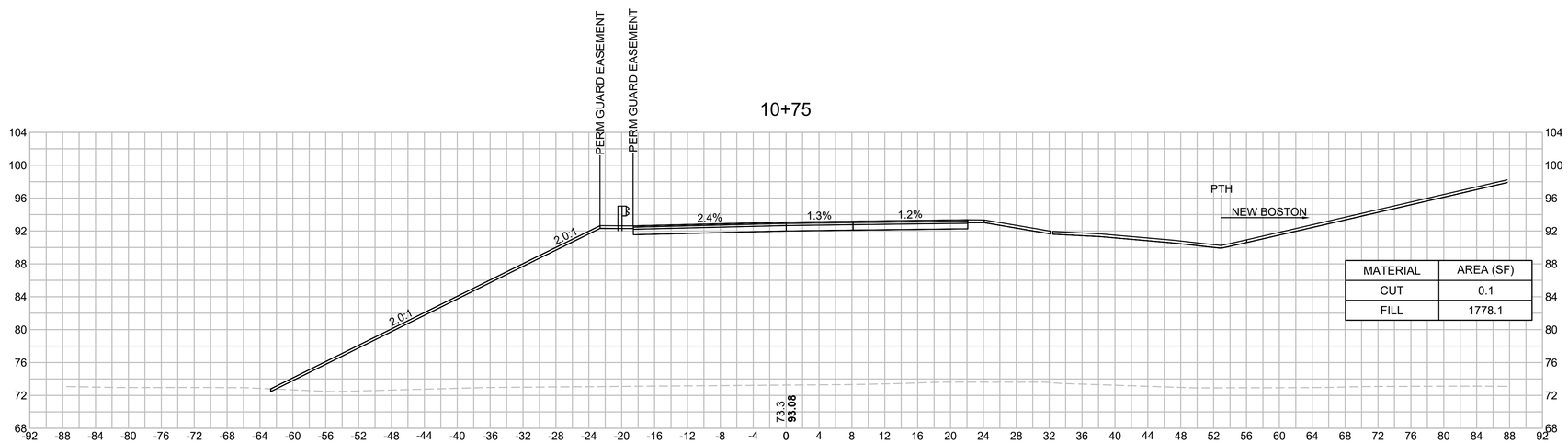

MATERIAL	AREA (SF)
CUT	0.1
FILL	1778.1

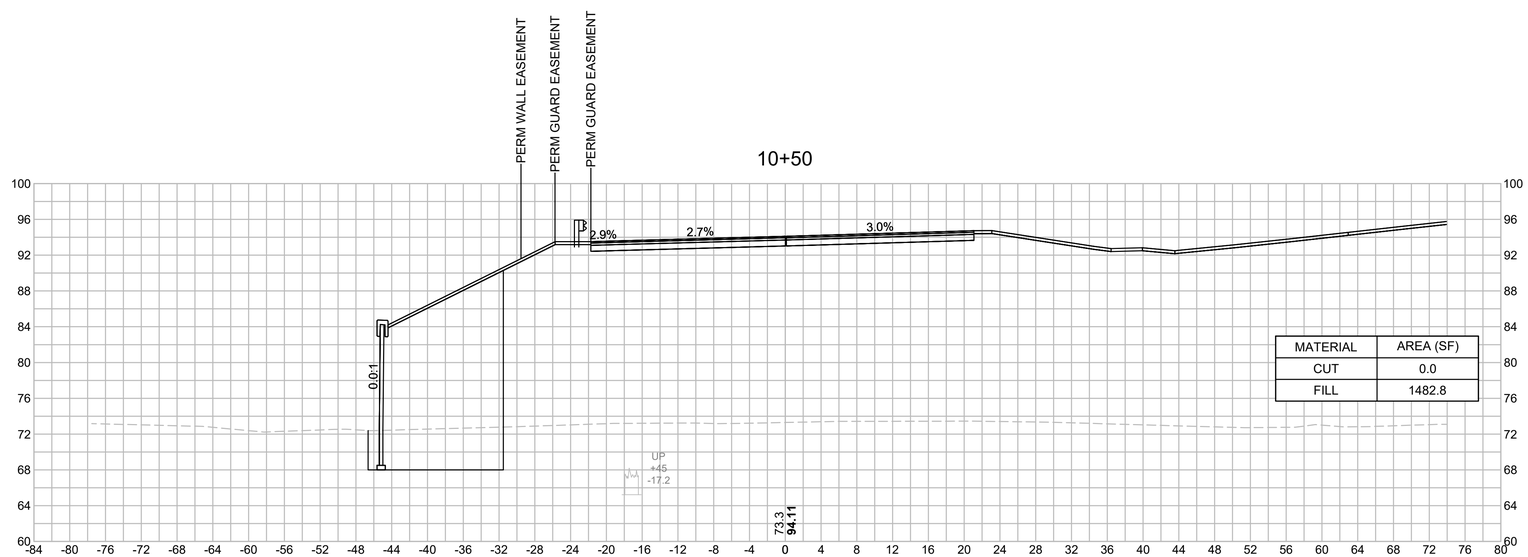

MATERIAL	AREA (SF)
CUT	0.0
FILL	1482.8

HOR. SCALE IN FEET
8 0 8 16
8 0 8 16
VER. SCALE IN FEET

604996_HD(XSEC).DWG Plotted on 3-Aug-2020 9:31 PM

WOBURN
NEW BOSTON STREET

STATE	FED. AID PROJ. NO.	SHEET NO.	TOTAL SHEETS
MASS.	TBD	145	147
PROJECT FILE NO. 604996			

CROSS SECTIONS
NE RESINS DRIVEWAY

11+50

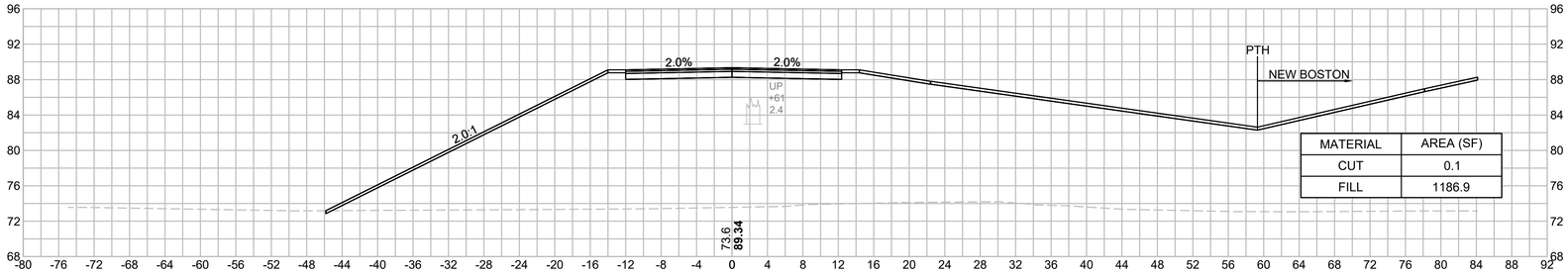

MATERIAL	AREA (SF)
CUT	0.1
FILL	1186.9

11+25

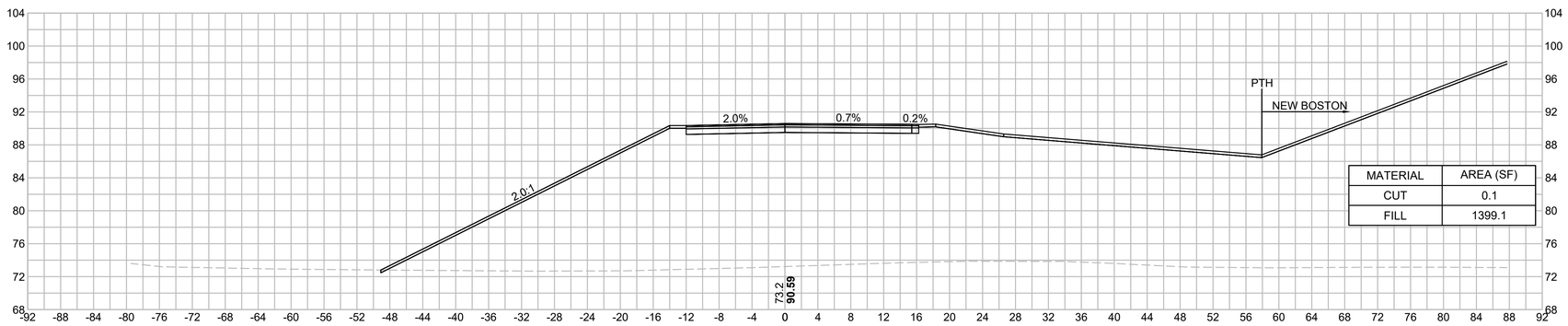

MATERIAL	AREA (SF)
CUT	0.1
FILL	1399.1

11+00

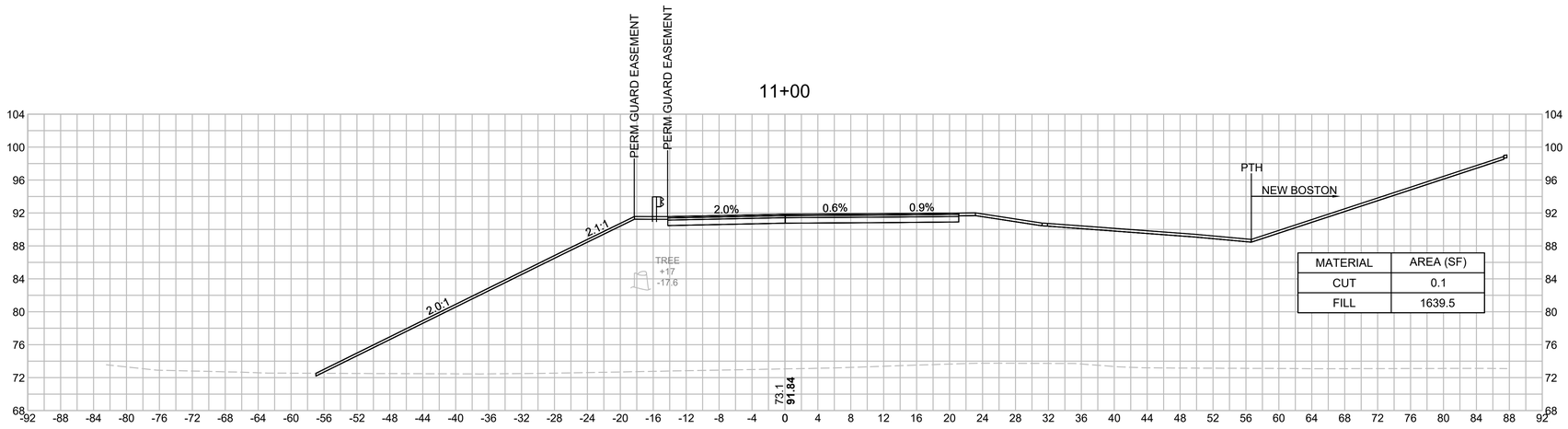

MATERIAL	AREA (SF)
CUT	0.1
FILL	1639.5

HOR. SCALE IN FEET
8 0 8 16
8 0 8 16
VER. SCALE IN FEET

604996_HD(XSEC).DWG Plotted on 3-Aug-2020 4:29 PM

WOBURN
NEW BOSTON STREET

STATE	FED. AID PROJ. NO.	SHEET NO.	TOTAL SHEETS
MASS.	TBD	146	147
PROJECT FILE NO. 604996			

CROSS SECTIONS
NE RESINS DRIVEWAY

604996_HD(XSEC).DWG Plotted on 3-Aug-2020 9:34 PM

12+50

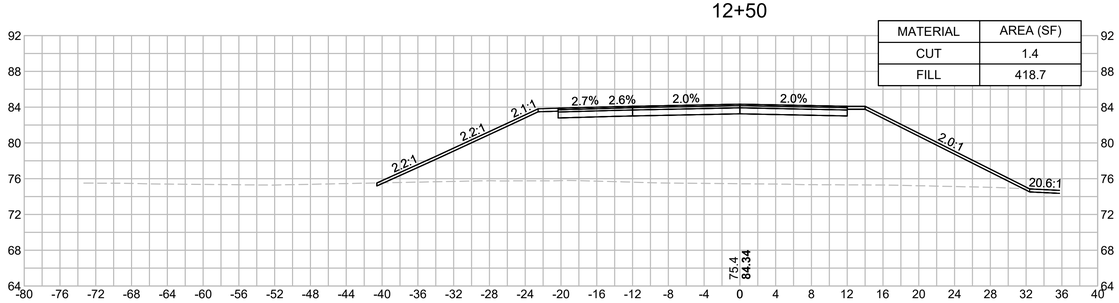

MATERIAL	AREA (SF)
CUT	1.4
FILL	418.7

12+00

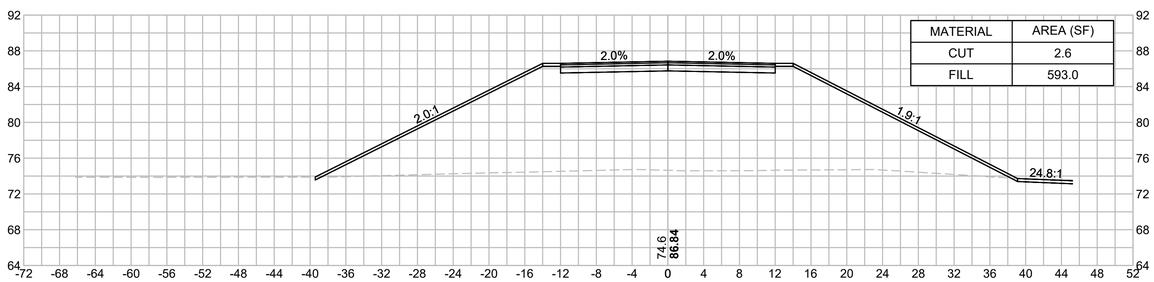

MATERIAL	AREA (SF)
CUT	2.6
FILL	593.0

11+75

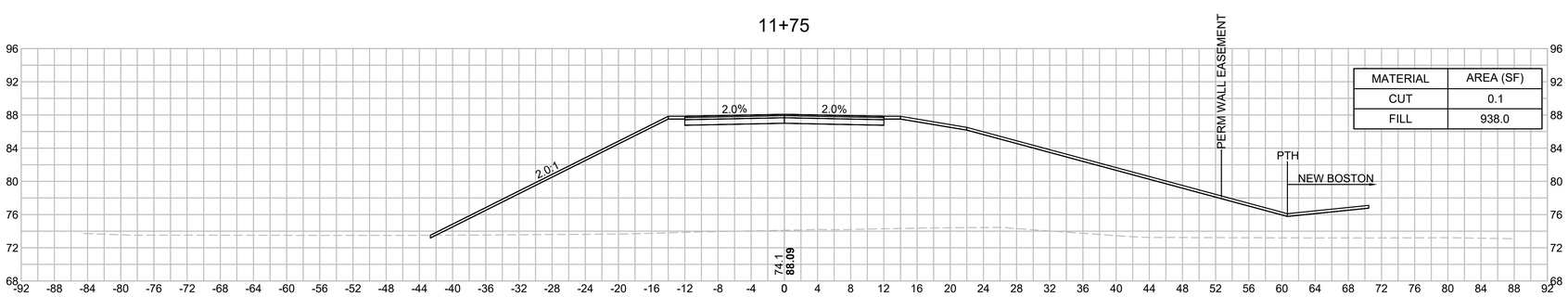

MATERIAL	AREA (SF)
CUT	0.1
FILL	938.0

HOR. SCALE IN FEET
8 0 8 16
8 0 8 16
VER. SCALE IN FEET

WOBURN
NEW BOSTON STREET

STATE	FED. AID PROJ. NO.	SHEET NO.	TOTAL SHEETS
MASS.	TBD	147	147
PROJECT FILE NO. 604996			

CROSS SECTIONS
NE RESINS DRIVEWAY

14+50

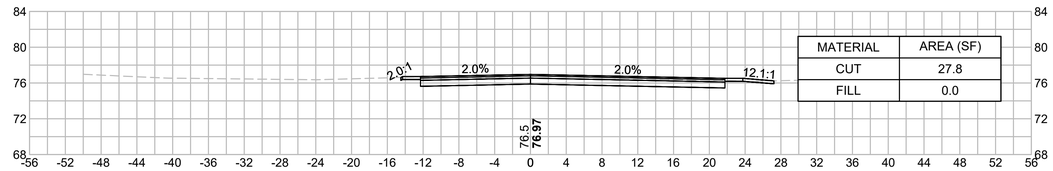

MATERIAL	AREA (SF)
CUT	27.8
FILL	0.0

14+00

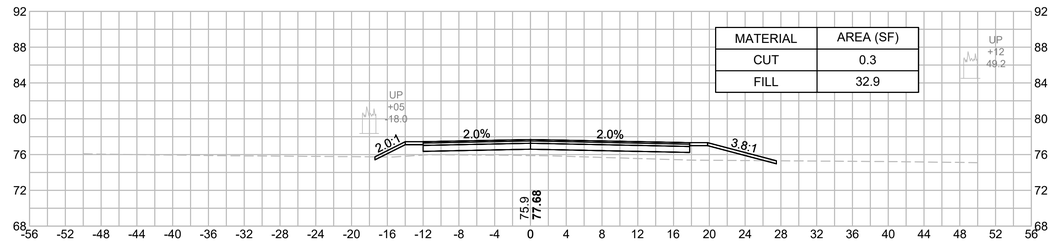

MATERIAL	AREA (SF)
CUT	0.3
FILL	32.9

13+50

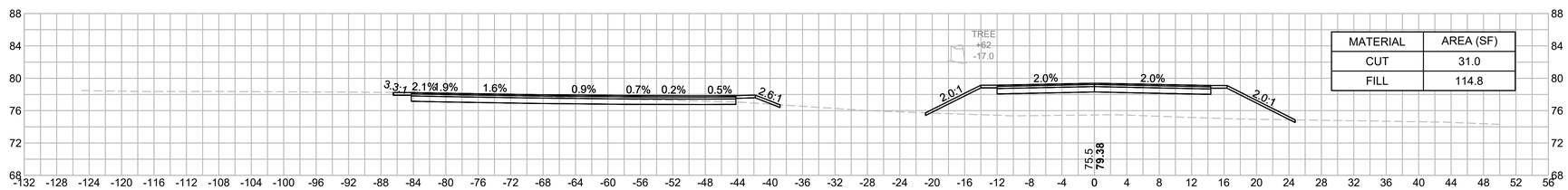

MATERIAL	AREA (SF)
CUT	31.0
FILL	114.8

13+00

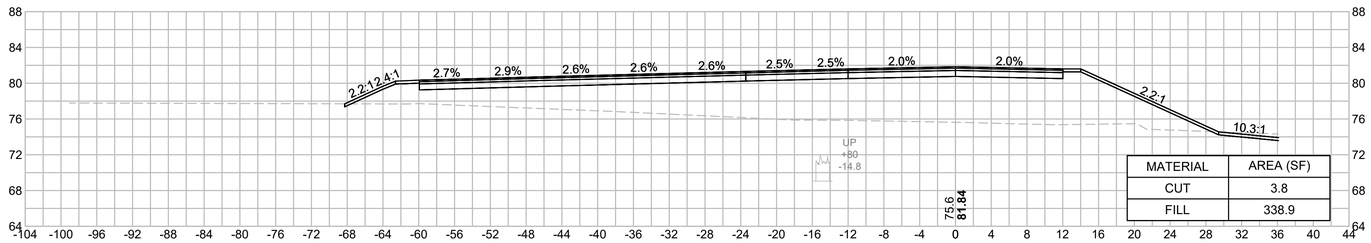

MATERIAL	AREA (SF)
CUT	3.8
FILL	338.9

HOR. SCALE IN FEET
8 0 8 16
8 0 8 16

604996_HD(XSEC).DWG Plotted on 3-Aug-2020 4:34 PM