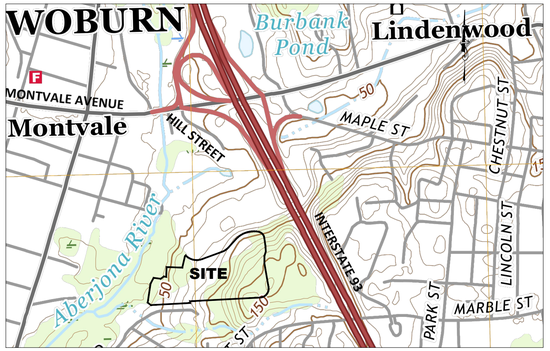

LOCUS MAP
SCALE: 1"=800'±

SITE PLAN
FOR
HIGHLAND AT VALE

MULTIFAMILY COMMUNITY

TECHNOLOGY AND BUSINESS MIXED USE OVERLAY DISTRICT (TBOD)
THE VALE
WOBURN, MASSACHUSETTS

CITY COUNCIL:

DATE	DATE REVISED	SHEET NUMBER	SHEET DESCRIPTION
04/30/2020	-	1	COVER SHEET
04/30/2020	-	2	LEGEND & NOTES
04/30/2020	-	3	SITE CONTEXT PLAN
04/30/2020	-	4	OVERALL LAYOUT PLAN
04/30/2020	-	5	LAYOUT PLAN A
04/30/2020	-	6	LAYOUT PLAN B
04/30/2020	-	7	GRADING & DRAINAGE PLAN A
04/30/2020	-	8	GRADING & DRAINAGE PLAN B
04/30/2020	-	9	UTILITY PLAN A
04/30/2020	-	10	UTILITY PLAN B
04/30/2020	-	11 ~ 18	PLAN & PROFILE SHEETS
04/30/2020	-	19	PHOTOMETRIC PLAN
04/30/2020	-	20 ~ 28	CONSTRUCTION DETAILS
04/13/2020	-	V-101 ~ V104	EXISTING CONDITIONS
04/30/2020	-	L1.0	LANDSCAPE PLAN
04/30/2020	-	L1.1 ~ L1.2	LANDSCAPE PLAN ENLARGEMENTS
04/30/2020	-	L2.0	LANDSCAPE DETAILS
04/30/2020	-	A-1 ~ A-27	ARCHITECTURAL PLANS *

* BOUND SEPARATELY

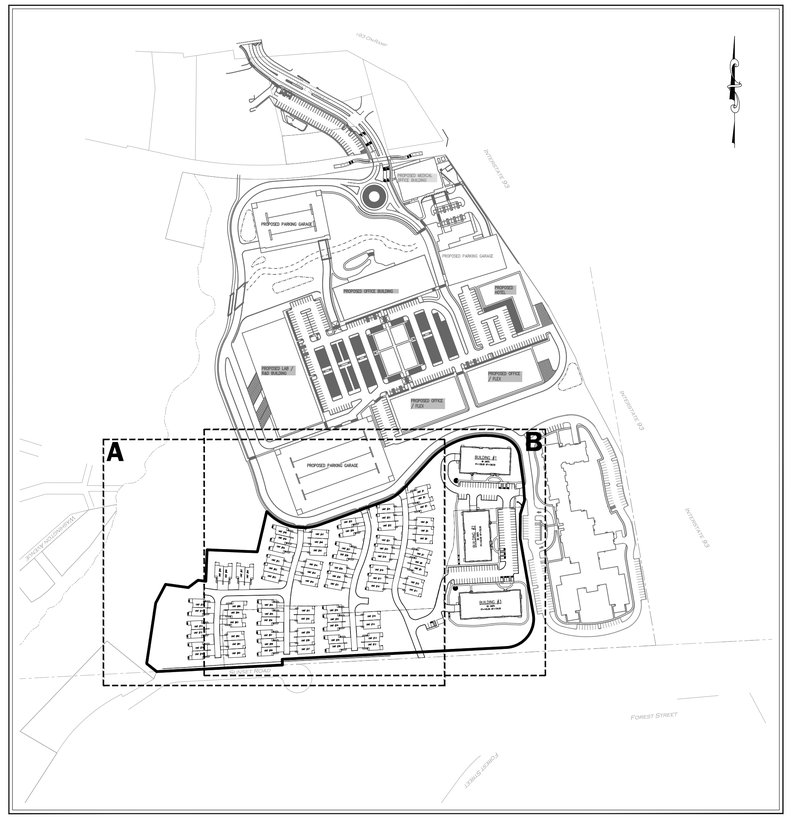

OVERALL LAYOUT PLAN
SCALE: 1"=250'

PREPARED BY:

CIVIL DESIGN GROUP, LLC
21 HIGH STREET SUITE 207
NORTH ANDOVER, MA 01845
www.cdgengineering.com
p: 978-794-5400
f: 978-965-3971
CONTACT: MATTHEW LEIDNER, P.E.

PREPARED FOR:

PULTE HOMES OF NEW ENGLAND, LLC
115 FLANDERS ROAD
SUITE 200
WESTBOROUGH, MA 01581
www.pulte.com

PROPERTY:
PORTION OF ASSESSOR'S PARCEL 54-05-01 (HILLSTREET)
PORTION OF ASSESSOR'S PARCEL 62-01-29 (1 WASHINGTON AVENUE)
WOBURN, MA 01810

OWNER OF RECORD:
MONTVALE LAND LLC
BOSTON, MA 02109

CONSULTANTS:

SURVEY:
ALLEN & MAJOR ASSOCIATES, INC.
400 HARVEY ROAD
MANCHESTER, NH 03103
603-627-5500
CONTACT: ANDREW RUGGLES, SIT

LANDSCAPE ARCHITECT:
BOHLER ENGINEERING
352 TURNPIKE ROAD
SOUTHBOROUGH, MA 01772
508-480-9900
CONTACT: MATTHEW MRVA, RLA

WETLANDS:
VHB
101 WALNUT STREET
WATERTOWN, MA 02471
617-924-1770
CONTACT: LAURA LAICH

TRAFFIC:
VHB
101 WALNUT STREET
WATERTOWN, MA 02471
617-607-2731
CONTACT: ROBERT NAGI, P.E.

NOT FOR CONSTRUCTION

CDG PROJECT #: 19024

SEAL:
COMMONWEALTH OF MASSACHUSETTS
MATTHEW A. LEIDNER
CIVIL
No. 45641
REGISTERED PROFESSIONAL ENGINEER

MATTHEW A. LEIDNER, P.E.

SHEET:
COVER SHEET
1

DATE: 04/30/2020

GENERAL NOTES

1. ZONING INFORMATION OBTAINED FROM THE CITY OF WOBURN ZONING ORDINANCE, DATED AUGUST 1, 2019.
2. THE PROJECT IS SUBJECT TO APPROVAL(S) BY THE WOBURN CITY COUNCIL, WOBURN CONSERVATION COMMISSION, AND MASSACHUSETTS WATER RESOURCES AUTHORITY. THE CONTRACTOR SHALL BECOME FAMILIAR WITH AND ADHERE TO ALL CONSTRUCTION-RELATED REQUIREMENTS OF THE THESE AND ALL OTHER APPROVALS.
3. THE CONTRACTOR SHALL GIVE TWENTY-FOUR (24) HOUR NOTICE TO PERTINENT MUNICIPAL DEPARTMENTS BEFORE COMMENCING ANY WORK IN THE FIELD.
4. ALTERNATIVE METHODS AND PRODUCTS OTHER THAN THOSE SPECIFIED MAY BE USED IF REVIEWED AND APPROVED BY THE OWNER, SITE ENGINEER, AND APPROPRIATE REGULATORY AGENCY PRIOR TO INSTALLATION.
5. THE CONTRACTOR SHALL SUBMIT SHOP DRAWINGS OF ALL PRODUCTS, MATERIALS, AND PLANT SPECIFICATIONS TO THE OWNER AND SITE ENGINEER FOR REVIEW AND APPROVAL PRIOR TO FABRICATION OR DELIVERY TO THE SITE. ALLOW A MINIMUM OF 14 WORKING DAYS FOR REVIEW.
6. THE CONTRACTOR SHALL PROVIDE AS-BUILT RECORDS OF ALL CONSTRUCTION (INCLUDING UNDERGROUND UTILITIES) TO THE OWNER AT THE END OF THE CONSTRUCTION.
7. TRASH MANAGEMENT FOR THE TOWNHOMES WILL BE BY CURBSIDE COLLECTION. TRASH MANAGEMENT FOR THE LOW-RISE BUILDINGS WILL BE INSIDE THE BUILDING BASEMENTS. AN EXTERIOR RECYCLING AREA WILL BE PROVIDED IN THE LOW-RISE AREA AS SHOWN ON THE PLANS.
8. TEMPORARY ON-SITE SALES OFFICES WILL BE UTILIZED THROUGHOUT THE BUILD-OUT PROCESS (LOCATIONS TO BE SELECTED UPON COMMENCEMENT OF THE SALES PHASE).
9. AFFORDABLE UNITS (15% = 30 AFFORDABLE UNITS):
   - 9.1. TOWNHOMES: UNITS 5, 7, 8, 13, 25, 43, 46, 53, 55, 58, & 64.
   - 9.2. BUILDING 1: UNITS 103, 107, 202, 207, & 302.
   - 9.3. BUILDING 2: UNITS 103, 107, 204, 302, & 402.
   - 9.4. BUILDING 3: UNITS 103, 105, 108, 111, 205, 109, 212, 302, & 305.

SITE LAYOUT NOTES

1. ALL STATION LABELS PERTAIN TO CENTERLINE OF ROAD GEOMETRY.
2. NO BUILDINGS, BUILDING PROJECTIONS, OR APPURTENANT STRUCTURES SUCH AS DECKS AND STAIRS SHALL BE CONSTRUCTED IN THE REQUIRED BUILDING SETBACKS.
3. CURB WITHIN THE SITE LIMITS SHALL BE CAPE COD BERM (CCB), WITH VERTICAL GRANITE CURB (VGC) AT RAMPS WHERE CURB TRANSITIONS FROM REVEAL TO NO REVEAL.
4. PAVEMENT MARKINGS AND STRIPING SHALL PAINTED WITH 2 COATS OF WHITE PAINT PER FEDERAL SPECIFICATION TI-P-115 TYPE 1: ALKYD.
5. ALL ON-SITE TRAFFIC ADVISORY SIGNS INCLUDING STOP SIGNS SHALL BE MOUNTED ON A 4"x4" PRESSURE-TREATED POST WITH BLACK PVC WRAP AND MANSARD CAP, AND SHALL BE 48" FROM GROUND TO BOTTOM OF SIGN. STOP SIGNS DIMENSIONS SHALL BE 18"x18".
6. ACCESSIBLE PARKING SPACES SHALL CONFORM TO THE LATEST EDITION OF THE REQUIREMENTS OF THE AMERICANS WITH DISABILITIES ACT (ADA) AND THE ARCHITECTURAL ACCESS BOARD (AAB) AS SHOWN ON THE SITE LAYOUT PLAN.
7. ACCESSIBLE SIGNAGE SHALL CONFORM TO THE LATEST EDITION OF THE MANUAL ON UNIFORM TRAFFIC CONTROL DEVICES (MUTCD) FOR COLOR AND SIZE, AND SHALL BE MOUNTED ON 2" ROUND GALVANIZED STEEL POSTS PAINTED BLACK, 48" FROM GROUND TO BOTTOM OF SIGN.

GRADING & DRAINAGE NOTES

1. THE ELEVATIONS SHOWN ON THIS PLAN ARE BASED ON THE DATUM REFERENCE USED ON THE EXISTING CONDITIONS SURVEY. ELEVATIONS ARE NOT ON BOSTON CITY BASE.
2. THE CONTRACTOR SHALL BE RESPONSIBLE FOR ESTABLISHING AND MAINTAINING ALL CONTROL POINTS AND ELEVATION BENCHMARKS THROUGHOUT CONSTRUCTION.
3. EXTERIOR ELEVATIONS ALONG EACH BUILDING SIDE MAY VARY IN ORDER TO ACHIEVE GRADE IN CERTAIN AREAS. CONTRACTOR SHALL MAINTAIN POSITIVE DRAINAGE AWAY FROM THE PROPOSED BUILDING. FOR GARDEN BUILDINGS, THE FINISHED GRADE ALONG THE BUILDING SHALL BE A MINIMUM OF 13" BELOW FIRST FLOOR ELEVATION EXCEPT AT DOORWAYS.
4. NEW SIDEWALKS SHALL HAVE A MAXIMUM CROSS SLOPE OF 2.0%. FURTHERMORE, ACCESSIBLE PARKING SPACES AND PROXIMATE ACCESS AISLES SHALL BE SLOPED AT A MAXIMUM OF 2.0% IN ALL DIRECTIONS. SHOULD ANY DISCREPANCIES WITH THESE REQUIREMENTS ARISE DURING CONSTRUCTION, THE CONTRACTOR SHALL NOTIFY THE ENGINEER IMMEDIATELY SO THAT AN ACCEPTABLE SOLUTION CAN BE DETERMINED.
5. CONTRACTOR SHALL NOTIFY ENGINEER IF THE ILLUSTRATED GRADES CANNOT BE ACHIEVED WITHIN ACCESSIBLE AREAS, INCLUDING PARKING SPACES.
6. UNLESS OTHERWISE SPECIFIED, THE CONTRACTOR SHALL PROVIDE AS-BUILT RECORDS OF ALL CONSTRUCTION (INCLUDING UNDERGROUND UTILITIES) TO THE OWNER AT THE END OF THE CONSTRUCTION.
7. PROPOSED BOTTOM OF CURB ELEVATIONS ALONG EXISTING STREETS ARE BASED ON EXISTING CONDITIONS INFORMATION AND SHALL BE CONSIDERED APPROXIMATE. CONTRACTOR SHALL MATCH EXISTING EDGE OF PAVEMENT GRADE.
8. EXISTING DRAINAGE AND UTILITY RIM ELEVATIONS LOCATED WITHIN THE LIMIT OF WORK TO REMAIN SHALL BE ADJUSTED BY THE CONTRACTOR TO MATCH NEW FINISHED GRADE.
9. ALL DISTURBED AREAS OUTSIDE THE LIMIT OF WORK SHALL BE RESTORED IN KIND.
10. PROPOSED CATCH BASINS SHALL INCLUDE ELIMINATOR HOODS AS SPECIFIED IN THE DETAILS.
11. UNLESS OTHERWISE SPECIFIED, ALL NEW DRAINAGE PIPE SHALL BE DUAL WALL CORRUGATED HDPE (ADS N-12 OR APPROVED EQUAL), RATED FOR H-20 LOADING, MINIMUM 12" COVER (UNLESS GREATER COVER IS REQUIRED BY THE MANUFACTURER), AND LAID AT A MINIMUM SLOPE OF 0.005'/'. PIPE SIZES SHALL BE AS FOLLOWS:
    - 11.1. DRAINAGE PIPES CONNECTING CATCH BASINS TO MANHOLES AND MANHOLES TO MANHOLES: SIZE VARIES, REFER TO GRADING AND PROFILE SHEETS FOR SIZES.
    - 11.2. LOW-RISE BUILDING GARAGE TRENCH DRAIN OUTLET PIPES: 8"
    - 11.3. LOW-RISE BUILDING ROOF DRAIN PIPES: 12" IF LAID AT >=0.01'/'; 15" IF LAID BETWEEN 0.005'/' AND 0.01'/'.
    - 11.4. FOUNDATION DRAIN PIPES: 6" FOR LOW-RISE BUILDINGS; 4" FOR EACH TOWNHOME BUILDING (STEP UP TO 6" IF MULTIPLE TOWNHOME BUILDINGS TIED TOGETHER).
12. ROOF DRAINS:
    - 12.1. TOWNHOMES: ALL ROOFTOPS SHALL BE GUTTERED. FRONT GUTTER DOWNSPOUTS SHALL TIE INTO A ROOF DRAIN PIPE. REAR GUTTER DOWNSPOUTS SHALL SPILL ONTO THE GROUND UNLESS SPECIFICALLY SHOWN OTHERWISE ON THE PLANS.
    - 12.2. LOW-RISE BUILDINGS: ALL ROOFTOPS SHALL BE GUTTERED AND ALL GUTTER DOWNSPOUTS SHALL TIE INTO A ROOF DRAIN PIPE .
    - 12.3. EACH BUILDING SHALL HAVE A MINIMUM OF ONE GUTTER DOWNSPOUT OVERFLOW ON EACH INDEPENDENT PIPE NETWORK. THE OVERFLOW SHALL BE INSTALLED ON THE DOWNSPOUT LOCATED AT THE LOWEST GROUND ELEVATION ALONG THE BUILDING WITHIN EACH PIPE NETWORK.
    - 12.4. PROPOSED ROOF DRAIN PIPES SHALL HAVE "NYLOPLAST" MANHOLES INSTALLED AS SHOWN ON THE GRADING & DRAINAGE PLANS.
    - 12.5. THE LOWEST GROUND ELEVATION AT THE GUTTER DOWNSPOUTS SHALL BE ABOVE THE 100-YEAR STORM PEAK WATER ELEVATION FOR THE STORMWATER MANAGEMENT SYSTEM INTO WHICH IT FLOWS.
13. FOUNDATION DRAINS:
    - 13.1. PROPOSED FOUNDATION DRAIN PIPES SHALL HAVE CLEANOUTS INSTALLED AT INTERSECTIONS AND ANGULAR BENDS. NOT REQUIRED AT RADIAL BENDS.
14. SEE DETAIL SHEETS AND PROFILES FOR WATER QUALITY UNITS MANUFACTURER AND MODELS.
15. GALVANIZED STEEL TRASH RACKS SHALL BE INSTALLED ON OPEN ENDS OF ALL INLET AND DISCHARGE DRAIN PIPES 18" OR LARGER IN DIAMETER. TRASH RACKS SHALL BE SIZED TO FIT THE SPECIFIC PIPE FOR WHICH THEY WILL BE USED AND SHALL BE REMOVABLE FOR SERVICING THE PIPE.
16. TOP AND BOTTOM OF WALL ELEVATIONS SHOWN ON GRADING & DRAINAGE PLANS REPRESENT THE EXPOSED PORTION OF THE WALL. ALL WALLS GREATER THAN 4 FEET EXPOSED HEIGHT SHALL BE DESIGNED BY A STRUCTURAL ENGINEER.
17. ELEVATION OF LANDSCAPED AREAS ARE GIVEN AT PLANTED GRADE.

SITE & DEMOLITION NOTES

1. THE LOCATION AND ELEVATION OF EXISTING UTILITIES AND STRUCTURES SHOWN ON THESE PLANS ARE BASED ON MEASUREMENTS TAKEN IN THE FIELD AND DISCOVERED RECORDS FROM VARIOUS UTILITY COMPANIES AND/OR FROM THE MUNICIPALITY. THIS INFORMATION SHALL NOT BE CONSIDERED EXACT AND THE CONTRACTOR SHALL VERIFY ALL UNDERGROUND UTILITY LOCATIONS PRIOR TO COMMENCEMENT OF CONSTRUCTION ACTIVITIES. CONTRACTOR SHALL NOTIFY 'DIG SAFE' (811) AT LEAST 72 HOURS PRIOR TO ANY EXCAVATION TO REQUEST EXISTING UTILITY MARK OUT LOCATIONS. THE CONTRACTOR SHALL NOTIFY THE ENGINEER IMMEDIATELY IF EXISTING UTILITY LOCATIONS CONFLICT WITH THE PROPOSED DEVELOPMENT PROGRAM SO THAT A REMEDIAL ACTION CAN TAKE PLACE PRIOR TO ANY WORK. THE CONTRACTOR IS RESPONSIBLE FOR RELOCATING ALL EXISTING UTILITIES AS A RESULT OF THE PROPOSED DEVELOPMENT.
2. EXISTING BASE INFORMATION INCLUDING PROPERTY LINE, STRUCTURES, UTILITIES AND TOPOGRAPHY ARE TAKEN FROM PLAN ENTITLED "EXISTING CONDITIONS," PREPARED BY ALLEN & MAJOR ASSOCIATES, INC., DATED MARCH 26 2020, CONSISTING OF 4 SHEETS.
3. ELEVATIONS SHOWN ARE BASED ON THE DATUM REFERENCED ON THE EXISTING CONDITIONS PLAN. ELEVATIONS ARE NOT ON BOSTON CITY BASE.
4. ALL WORK MUST BE INSPECTED PER TOWN REQUIREMENTS. CONTRACTOR SHALL CONTACT THE MUNICIPAL BUILDING DEPARTMENT PRIOR TO THE START OF WORK.
5. THE CONTRACTOR SHALL BE RESPONSIBLE FOR IMPLEMENTING AND MAINTAINING ALL CONSTRUCTION RELATED CONDITIONS OUTLINED IN THE APPROVALS IN ADDITION TO THE ITEMS OUTLINED IN THESE CONSTRUCTION DOCUMENTS.
6. THE LIMIT OF WORK FOR THIS PROJECT SHALL BE SHOWN ON THE PLANS AS SAWCUT LINES, EROSION CONTROL BARRIER LINES, AND/OR CONSTRUCTION DELINEATION FENCE LINES. LIMIT OF WORK LINES AND SHALL BE MARKED IN THE FIELD PRIOR TO CONSTRUCTION. ALL EXISTING FEATURES WITHIN LIMIT OF WORK LINE SHALL BE REMOVED UNLESS OTHERWISE SPECIFIED.
7. THE CONTRACTOR SHALL ARRANGE A PRE-CONSTRUCTION MEETING WITH THE ENGINEER AND MUNICIPAL OFFICIALS PRIOR TO THE START OF CONSTRUCTION.
8. ALL DISTURBED OFF-SITE AREAS SHALL BE RESTORED TO PRE-CONSTRUCTION CONDITION.
9. A STABILIZED CONSTRUCTION ENTRANCE SHALL BE INSTALLED PER THE DETAIL WHEREVER CONSTRUCTION ACCESS EXISTS. PAVED AREAS SHALL BE KEPT CLEAN AT ALL TIMES.
10. THE CONTRACTOR SHALL BE RESPONSIBLE FOR OBTAINING AND PAYING FOR ALL PERMITS AND UTILITY CONNECTION/DISCONNECTION FEES RELATED TO THE PROJECT. CONTRACTOR SHALL NOTIFY AND COORDINATE ALL UTILITY WORK WITH THE APPLICABLE UTILITY COMPANIES AND/OR LOCAL DEPARTMENTS. ALL PERMITS SHALL BE KEPT WITHIN THE TRAILER AND CLEARLY VISIBLE.
11. THE OFFSITE DISPOSAL OF ALL DEMOLISHED MATERIALS SHALL COMPLY WITH THE APPLICABLE LOCAL, STATE AND FEDERAL GUIDELINES.
12. FILL MATERIAL(S) SHALL NOT CONTAIN HAZARDOUS MATERIALS.
13. CONSTRUCTION DUMPSTERS SHALL BE LOCATED ON A STABLE SURFACE, PROPERLY MAINTAINED, AND EMPTIED ON A REGULAR BASIS.
14. THE CONTRACTOR IS RESPONSIBLE FOR THE GENERAL UPKEEP OF THE SITE DURING THE CONSTRUCTION PROCESS.

UTILITY NOTES

1. ALL UTILITIES ARE TO BE LOCATED UNDERGROUND UNLESS OTHERWISE NOTED.
2. ALL UTILITIES, PIPE MATERIALS, STRUCTURES, INSTALLATION METHODS, AND TESTING SHALL CONFORM TO MUNICIPALITY STANDARDS AND REQUIREMENTS. THE CONTRACTOR SHALL COORDINATE INSPECTIONS BY THE MUNICIPALITY WHEN REQUIRED.
3. WATER:
   - 3.1. WATER WILL BE SUPPLIED TO THE PROJECT VIA STUBS INSTALLED BY OTHERS ALONG THE RING ROAD.
   - 3.2. WATER MAINS AND SERVICES SHALL BE INSTALLED WITH A MINIMUM 5' OF COVER EXCEPT AS NOTED OR DETAILED OTHERWISE.
   - 3.3. NO WATER SERVICE PIPES SHALL BE LAID IN THE SAME TRENCH WITH GAS PIPES, SEWER PIPE OR ANY OTHER FACILITY OF A PUBLIC SERVICE COMPANY, OR WITHIN THREE FEET OF ANY OPEN EXCAVATION OR VAULT.
   - 3.4. WATER PIPE SIZES AND MATERIALS:
     - 3.4.1. WATER MAINS SHALL BE 8" CLASS 52 CLDI.
     - 3.4.2. LOW-RISE BUILDINGS SHALL EACH BE SERVICED BY ONE 4" CLASS 52 DUCTILE IRON DOMESTIC WATER SERVICE AND A SEPARATE 6" CLASS 52 DUCTILE IRON FIRE SERVICE.
     - 3.4.3. FOR TOWNHOME BUILDINGS CONTAINING 2 UNITS, EACH DWELLING UNIT SHALL BE SERVICED BY A 1" TYPE K COPPER DOMESTIC WATER SERVICE.
     - 3.4.4. FOR TOWNHOME BUILDINGS CONTAINING 3 UNITS, EACH DWELLING UNIT SHALL BE SERVICED BY A 2" TYPE K COPPER WATER SERVICE. AT THE INTERIOR OF THE UNIT, THE SERVICE SHALL SPLIT INTO A METERED 1" TYPE K COPPER DOMESTIC SERVICE AND A NON-METERED 2" TYPE K COPPER FIRE SERVICE. FIRE SERVICES SHALL BE EQUIPPED WITH BACKFLOW PREVENTERS DOWNSTREAM OF THE DOMESTIC WATER BRANCH.
4. SEWER:
   - 4.1. WASTEWATER FROM THE PROJECT WILL BE DIRECTED TO SEWER STUBS INSTALLED BY OTHERS ALONG THE RING ROAD.
   - 4.2. SEWER SHALL BE ENCASED IN CONCRETE IF THE SEWER IS PLACED WITHIN 10' (HORIZONTALLY) OF A WATER LINE AND THE SEWER IS EITHER ABOVE OR WITHIN 18" BELOW THE WATER LINE.
   - 4.3. SEWER PIPE SIZES AND MATERIALS:
     - 4.3.1. GRAVITY SEWER MAINS SHALL BE 8" PVC LAID AT A MINIMUM SLOPE OF 0.004'/'.
     - 4.3.2. PVC GRAVITY SEWER PIPES WITH A BURY DEPTH OF >10' SHALL BE SDR-26. FOR SHALLOWER INSTALLATIONS SDR-35 IS ACCEPTABLE.
     - 4.3.3. FORCE MAIN SHALL BE 2" SDR-11 HDPE.
     - 4.3.4. LOW-RISE BUILDINGS SHALL EACH BE SERVICED BY ONE 8" DOMESTIC SEWER LATERAL AND A SEPARATE 4" LATERAL FROM THE GARAGE FLOOR DRAINS. THE GARAGE FLOOR DRAIN LATERAL SHALL BE ROUTED THROUGH A GAS TRAP BEFORE COMBINING WITH THE SANITARY SEWER. DOMESTIC SEWER SERVICE BETWEEN BUILDING AND "WYE" MANHOLE: 8" PVC LAID AT A MINIMUM SLOPE OF 0.02'/'. GARAGE FLOOR DRAIN SERVICE BETWEEN BUILDING AND GAS TRAP: 4" CAST IRON LAID AT A MINIMUM SLOPE OF 0.02'/'. GARAGE FLOOR DRAIN SERVICE BETWEEN GAS TRAP AND "WYE" MANHOLE: 4" PVC LAID AT A MINIMUM SLOPE OF 0.02'/'. "WYE" MANHOLE TO SMH: 8" PVC LAID AT A MINIMUM SLOPE OF 0.004'/'.
     - 4.3.5. FOR TOWNHOME BUILDINGS, EACH DWELLING UNIT SHALL BE SERVICED BY A 6" SDR-35 PVC SEWER SERVICE LAID AT A MINIMUM SLOPE OF 0.02'/'.
     - 4.3.6. TOWNHOME UNITS 60-75 SHALL BE SERVICED BY SEWER PUMPS. EACH OF THE BUILDINGS SHALL INCLUDE ONE COMMON SEWER PUMP STATION. BUILDINGS WITH TWO DWELLING UNITS SHALL UTILIZE E-ONE MODEL DH-151 AND BUILDINGS WITH 3 OR MORE DWELLING UNITS SHALL UTILIZE E-ONE MODEL DH-152-93.
5. THE CONTRACTOR, ON BEHALF OF THE DEVELOPER, SHALL SUBMIT UTILITY AS-BUILT PLANS IN PAPER AND PDF FORMAT INCLUDING SWING TIES FOR SEWER AND WATER TO THE TOWN ENGINEERING DEPARTMENT.
6. THE CONTRACTOR SHALL COORDINATE ALL PROPOSED GAS, ELECTRIC, TELEPHONE, AND CABLE UTILITY WORK WITH THE RESPECTIVE UTILITY COMPANIES THE PROPOSED CONNECTION LOCATIONS AND DETAILS PROVIDED HEREIN ARE FOR REPRESENTATION PURPOSES ONLY. FINAL CONNECTION POINTS AND DETAILS SHALL BE AS DETERMINED AND REQUIRED BY THE UTILITY COMPANIES.
7. TRANSFORMERS AND ASSOCIATED PROTECTIVE BOLLARDS SHALL BE PAINTED DARK GREEN IN COLOR. PAD SIZE AS DETERMINED BY UTILITY COMPANY.
8. SITE LIGHTING INSTALLATION CONTRACTOR SHALL BE RESPONSIBLE FOR RUNNING THE WIRING INTO THE NEAREST BUILDING OR DESIGNATED METER LOCATION.
9. GAS MAIN AND SERVICE SIZING SHALL BE AS DETERMINED BY THE UTILITY COMPANY.
10. DUE TO THE SCALE OF THE SITE WORK DRAWINGS, THE EXACT LOCATION OF UTILITY SERVICES TO THE BUILDING SHALL BE VERIFIED WITH THE BUILDING DRAWINGS.
11. SUITABLE, TEMPORARY PLUGS SHALL BE INSTALLED IN THE OPEN ENDS OF UTILITY SERVICES TO THE BUILDING PRIOR TO BACKFILLING. STUB LOCATIONS SHALL BE MARKED IN THE FIELD SO THAT THEY MAY BE EASILY LOCATED.
12. EXISTING DRAINAGE AND UTILITY RIM ELEVATIONS LOCATED WITHIN THE LIMIT OF WORK TO REMAIN SHALL BE ADJUSTED BY THE CONTRACTOR TO MATCH NEW FINISHED GRADE.
13. GUY WIRES SHALL BE INSTALLED AS REQUIRED/DESIGNED BY THE UTILITY COMPANY.
14. PIPE MATERIALS SHOWN ON THIS PLAN ARE SUBJECT TO SUBSTITUTION AT THE TIME OF CONSTRUCTION. ANY ALTERNATIVE PIPE MATERIAL SHALL CONFORM TO MUNICIPAL AND INDUSTRY STANDARDS FOR THE SELECTED APPLICATION.

SOIL EROSION AND SEDIMENTATION CONTROL NOTES

1. THIS SITE IS SUBJECT TO THE NATIONAL POLLUTANT DISCHARGE ELIMINATION SYSTEM (NPDES) PROGRAM OF THE UNITED STATES ENVIRONMENTAL PROTECTION AGENCY. SITE OPERATORS SHALL CONFORM TO MEET THE CRITERIA FOR A NPDES GENERAL PERMIT FOR STORMWATER DISCHARGES FROM CONSTRUCTION ACTIVITIES.
2. ADAPTATION TO ACTUAL FIELD CONDITIONS MAY WARRANT VARIATIONS FROM WHAT IS SHOWN ON THESE PLANS FOR EROSION CONTROLS IN ORDER TO MAXIMIZE THE EFFECTIVENESS OF THE CONTROLS.
3. THE CONTRACTOR IS RESPONSIBLE FOR IMPLEMENTING AND MAINTAINING ALL CONSTRUCTION RELATED CONDITIONS OUTLINED IN THE APPROVALS IN ADDITION TO THE ITEMS OUTLINED IN THESE CONSTRUCTION DOCUMENTS. THE SEQUENCING PLANS INCLUDED HEREIN ARE PROVIDED AS A GUIDANCE DOCUMENT TO ASSIST IN THE IMPLEMENTATION OF EROSION/SEDIMENTATION CONTROLS AND STABILIZATION OF THE SITE. ADAPTATION TO ACTUAL FIELD CONDITIONS MAY WARRANT VARIATIONS FROM WHAT IS SHOWN ON THESE PLANS TO MAXIMIZE THE EFFECTIVENESS OF THE CONTROLS.
4. THE CONTRACTOR SHALL ADHERE TO PROCEDURES OUTLINED IN THE STORMWATER POLLUTION PREVENTION PLAN (SWPPP) IN ACCORDANCE WITH THE EPA NPDES CONSTRUCTION GENERAL PERMIT REQUIREMENTS.
5. IN ACCORDANCE WITH THE NPDES CONSTRUCTION GENERAL PERMIT AND ASSOCIATED STORMWATER POLLUTION PREVENTION PLAN (SWPPP), EROSION CONTROL MEASURES SHALL BE INSPECTED AT LEAST EVERY 14 DAYS AND WITHIN 24 HOURS OF A 0.25" STORM. REPORTS DOCUMENTING THE RESULTS OF EACH INSPECTION AND ANY CORRECTIVE ACTIONS SHALL BE KEPT ON-FILE WITH THE SWPPP.
6. PROPOSED EROSION AND SEDIMENTATION CONTROL MEASURES WILL INCLUDE SILTATION FENCES, HAY BALES, CRUSHED STONE, RIPRAP, LOAM/SEED, HYDROSEEDING, MULCHING, EROSION CONTROL MATTING, DIVERSION BERMS, AND SEDIMENTATION BASINS AS FURTHER DESCRIBED HEREIN.
7. SILTATION FENCES AND WATTLES WILL BE USED FOR THE PERIMETER EROSION CONTROL BARRIER AS SHOWN ON THIS PLAN AND ELSEWHERE AS CONDITIONS WARRANT. HAY BALES WILL BE USED TO PROTECT OFFLINE CATCH BASINS (PRIOR TO BINDER) AND ELSEWHERE AS CONDITIONS WARRANT. THE CONTRACTOR WILL BE REQUIRED TO KEEP A REASONABLE STOCK OF SILTATION FENCE, WATTLES, AND HAY BALES ON SITE TO BE ABLE TO SUPPLEMENT OR MAKE REPAIRS AS NECESSARY.
8. LOAMING AND SEEDING OR HYDROSEEDING WILL BE USED AS A PERMANENT STABILIZATION MEASURE FOR ALL REVEGETATED AREAS OF THE SITE.
9. ALL PROPOSED SLOPES 3:1 AND STEEPER SHALL BE STABILIZED WITH AN EROSION CONTROL MATTING AND SHALL BE HYDROSEEDED.
10. MULCHING MAY BE USED TO REINFORCE SEEDED AREAS WHERE EROSION CONTROL MATTING IS NOT REQUIRED OR WARRANTED, BUT WHERE SOME PROTECTION IS WARRANTED. MULCHING MAY ALSO BE USED TO STABILIZE AREAS WHERE CONSTRUCTION ACTIVITIES WILL TEMPORARILY CEASE FOR MORE THAN 14 DAYS.
11. SEDIMENTATION BASINS SHALL BE USED THROUGHOUT THE SITE TO TREAT RUNOFF. DIVERSION BERMS SHALL BE UTILIZED TO DIVERT UNTREATED STORMWATER TO THE SEDIMENTATION BASINS. SEDIMENTATION BASINS AND DIVERSION BERMS SHALL BE ADDED, REMOVED, AND ADJUSTED AS THE SITE EVOLVES THROUGHOUT THE CONSTRUCTION PROCESS.
12. UPON CONVERTING ANY TEMPORARY SEDIMENTATION BASINS TO PERMANENT DETENTION/INFILTRATION BASINS, THE BASINS SHALL BE CLEANED OF ALL ACCUMULATED SEDIMENT TO ENSURE THAT THE VOLUMETRIC AND INFILTRATION DESIGN CAPACITIES ARE MAINTAINED.
13. STABILIZATION MEASURES SHALL BE INITIATED AS SOON AS PRACTICABLE IN PORTIONS OF THE SITE WHERE CONSTRUCTION ACTIVITIES HAVE TEMPORARILY OR PERMANENTLY CEASED, IN ACCORDANCE WITH THE NPDES CONSTRUCTION GENERAL PERMIT. STABILIZATION MEASURES SHALL BE IMPLEMENTED NOT MORE THAN 14 DAYS AFTER THE CONSTRUCTION ACTIVITY IN THAT PORTION OF THE SITE HAS TEMPORARILY OR PERMANENTLY CEASED, UNLESS PRECLUDED BY SNOW COVER OR FROZEN GROUND CONDITIONS IN WHICH CASE STABILIZATION MEASURES MUST BE INITIATED AS SOON AS PRACTICABLE. WHERE CONSTRUCTION ACTIVITY ON A PORTION OF THE SITE IS TEMPORARILY CEASED, AND EARTH DISTURBING ACTIVITIES WILL BE RESUMED WITHIN 14 DAYS, TEMPORARY STABILIZATION MEASURES DO NOT HAVE TO BE INITIATED ON THAT PORTION OF THE SITE.
14. EROSION AND SEDIMENTATION CONTROLS WILL BE REQUIRED TO BE MAINTAINED THROUGHOUT THE DURATION OF THE PROJECT TO ENSURE THAT THEY FUNCTION AS INTENDED. DEFICIENCIES WILL BE CORRECTED BY CLEANING, REPAIRING, OR REPLACING THE AFFECTED CONTROL(S) OR PORTION(S) THEREOF TO REESTABLISH PROPER FUNCTIONING AS QUICKLY AS POSSIBLE. SEDIMENTATION CONTROLS WILL BE REQUIRED TO BE CLEANED OR REPLACED WHEN THE ACCUMULATED SEDIMENT EXCEEDS 50 PERCENT OF THE DESIGN CAPACITY OF THE CONTROL. ANY OFF-SITE ACCUMULATIONS OF SEDIMENT WILL BE REQUIRED TO BE REMOVED AS QUICKLY AS POSSIBLE IN A MANNER THAT MINIMIZES ADDITIONAL DISTURBANCE.
15. EROSION CONTROL BARRIER (WHERE SHOWN) REPRESENTS THE LIMIT OF WORK. WHERE NO EROSION CONTROL BARRIER IS REQUIRED (SUCH AS UPSLOPE AREAS), A LIMIT OF WORK LINE HAS BEEN SHOWN. WHERE NO EROSION CONTROL BARRIER IS REQUIRED, THE LIMIT OF WORK SHALL BE DELINEATED IN THE FIELD BY A VISUAL BARRIER SUCH AS TEMPORARY CONSTRUCTION FENCING IN ORDER TO KEEP CONSTRUCTION ACTIVITIES OUT OF THOSE AREAS.
16. THE PROPOSED ONSITE DRAINAGE SYSTEM SHALL BE INSTALLED AS SOON AS PRACTICABLE. ALL EXISTING AND PROPOSED CATCH BASIN INLETS SHALL BE PROTECTED WITH A SILT SACK (SEE DETAIL).
17. DEWATERING OPERATIONS MUST DISCHARGE DIRECTLY INTO A SEDIMENT BASIN OR OTHER SETTLING AREA TO ALLOW FOR SUFFICIENT SETTLING PRIOR TO DISCHARGE.
18. DUST SHALL BE CONTROLLED BY AN APPROVED METHOD ACCORDING TO LOCAL, STATE AND FEDERAL STANDARDS.
19. ABUTTING PROPERTIES SHALL BE PROTECTED FROM EXCAVATION AND FILLING OPERATIONS FROM THIS PROJECT AT ALL TIMES. WORK ON ABUTTING PROPERTY SHALL REQUIRE WRITTEN AUTHORIZATION FROM THE OWNER PRIOR TO ANY LAND DISTURBANCE.
20. THE EROSION CONTROL MEASURES ILLUSTRATED IN THIS PLAN SET SHALL BE THE MINIMUM REQUIRED CONTROLS IMPLEMENTED.
21. STOCKPILING LOCATIONS SHALL BE FIELD DETERMINED AND SHALL NOT LIE WITHIN THE 100-FOOT WETLAND BUFFER. DIVERSION BERMS AND EROSION CONTROL BARRIERS SHALL BE INSTALLED DOWNGRADIENT OF STOCKPILES IN ACCORDANCE WITH THE PLAN AND DETAILS.
22. ESTIMATED STABILIZED AREA AS SHOWN ON THE SEQUENCING PLANS PROVIDED HEREIN REPRESENTS THE APPROXIMATE AREA THAT WILL BE STABILIZED (EITHER TEMPORARILY OR PERMANENTLY) BY THE END OF THE CONSTRUCTION SEQUENCE.
23. CRUSHED STONE AND/OR RIPRAP SHALL BE USED TO CONSTRUCT THE TRACKING PAD, CUT SLOPE TREATMENT AREAS, CHECK DAMS, SEDIMENTATION BASIN OUTLET PROTECTION, AND ELSEWHERE AS CONDITIONS WARRANT. THE CONTRACTOR WILL BE REQUIRED TO KEEP A REASONABLE STOCK OF CRUSHED STONE AND RIPRAP ON SITE TO BE ABLE TO SUPPLEMENT OR MAKE REPAIRS AS NECESSARY.

REQUESTED RELIEF

1. THE APPLICANT REQUESTS RELIEF FROM WOBURN ZONING ORDINANCE SECTION 5.2.1.4: "ACCESS TO THE BUILDABLE PORTION OF A LOT SHALL BE GAINED FROM A LOT'S LEGAL STREET FRONTAGE ONLY. ACCESS TO LOTS BY SO CALLED "COMMON DRIVEWAYS" OR ACCESS EASEMENTS SHALL BE PROHIBITED." RELIEF WILL BE NEEDED AS THE HIGHLAND AT VALE PROJECT OBTAINS IT FRONTAGE ALONG SUNSET ROAD FROM WHICH THERE WILL NO VEHICULAR ACCESS TO THE SITE. INSTEAD, ACCESS TO THE SITE WILL BE PROVIDED FROM HILL STREET IN A CONSISTENT FASHION AS APPROVED BY THE MASTER PLAN.
2. THE APPLICANT REQUESTS RELIEF FROM ZONING ORDINANCE SECTION 5.3.2: "NO FENCE SHALL BE BUILT OR MAINTAINED WITHIN THE STREET SETBACK REQUIREMENTS OR THE SETBACK OF THE EXISTING BUILDING OVER 3 FEET HIGH FROM THE SIDEWALK OR STREET LEVEL." RELIEF WILL BE NEEDED WITHIN THE SUNSET ROAD SETBACK TO CONSTRUCT A 7' TALL UNIVERSAL BOARD FENCE ALONG SUNSET ROAD FOR SCREENING PURPOSES, RETAINING WALLS >6' FOR GRADING PURPOSES, AND 48" FALL PROTECTION FENCING ON TOP OF WALLS FOR SAFETY PURPOSES.
3. THE APPLICANT REQUESTS RELIEF FROM ZONING ORDINANCE SECTION 5.3.4: "THE MAXIMUM HEIGHT OF ANY FENCE IS 6 FEET FROM THE GROUND." RELIEF WILL BE NEEDED TO CONSTRUCT RETAINING WALLS >6' TALL FOR GRADING PURPOSES, 48" FALL PROTECTION FENCING ON TOP OF WALLS FOR SAFETY PURPOSES, A 7' TALL UNIVERSAL BOARD FENCE ALONG SUNSET ROAD FOR SCREENING PURPOSES, AND A 7' TALL UNIVERSAL BOARD FENCE AROUND THE RECYCLING AREA FOR SCREENING PURPOSES.
4. THE APPLICANT REQUESTS RELIEF FROM ZONING ORDINANCE SECTION 28.8.3: "THE MINIMUM PAVEMENT WIDTH FOR ANY ROAD, DRIVEWAY OR ACCESS AISLE SHALL BE 20 FEET FOR ONE-WAY TRAFFIC AND 24 FEET FOR TWO-WAY TRAFFIC." RELIEF WILL BE NEEDED FOR THE TOWNHOME COMMON DRIVEWAYS WHICH ARE PROPOSED TO BE TWO-WAY WITH A 20' PAVED WIDTH TO MINIMIZE IMPERVIOUS SURFACES.

LEGEND

EXISTING	PROPOSED	DESCRIPTION
		PROPERTY LINE
	SINGLE GRATE / DOUBLE GRATE	CATCH BASIN
		DRAIN MANHOLE
		SEWER MANHOLE
D	D	DRAIN PIPE
GM G	G	GAS LINE
OHW	OH	OVERHEAD WIRES
ET&C	ET&C	UNDERGROUND WIRES
S	S	SEWER LINE
WG W	W W	WATER LINE
FM	FM	FORCE MAIN
	FD	FOUNDATION DRAIN
	RD	ROOF DRAIN
498	498	MINOR CONTOUR
500	500	INDEX CONTOUR
		FENCE
		CONSTRUCTION FENCE
		GUIDERAIL
		STONE WALL
		ECON: WATTLES + SILT FENCE
		ECON: WATTLES ONLY
		TREELINE
		BUILDING
		CRUSHED STONE
		RIPRAP
		CONSTRUCTION ENTRANCE
		MILL & OVERLAY
		HYDRANT
		SIGN
		SITE/STREET LIGHT
		BOLLARD LIGHT
		UTILITY POLE
		OUTLET CONTROL STRUCTURE
		FLARED END SECTION
TP-1		TEST PIT LOCATION
	TC 459.00 BC 458.00	TOP/BOTTOM CURB ELEVATION
300.5x	473.10	SPOT ELEVATION
	X	NUMBER OF PARKING SPACES
	X'R	CURB RADIUS
		ACCESSIBLE MARKINGS

GENERAL ABBREVIATIONS

ASSESSORS PARCEL	A.P.
BOTTOM OF CURB	BC
BITUMUNOUS CONCRETE	BIT. CONC
BEST MANAGEMENT PRACTICE	BMP
BORDERING VEGETATED WETLAND	BVW
CATCH BASIN	CB
CAPE COD BERM	CCB
CELLAR FLOOR	CF
CENTERLINE	CL
CLEANOUT	CO
CONCRETE SURFACE	CONC.
DRAIN MANHOLE	DMH
DIRECTION SIGN	DS
EMERGENCY SPILLWAY	ES
FLARED END SECTION	FES
FOOTING DRAIN	FD
GAS TRAP	GT
HIGH DENSITY POLYETHYLENE	HDPE
HIGH POINT	HP
INVERT ELEVATION	I=
IRON PIPE/PIN	IP
LINEAL FEET	LF
LOW POINT	LP
LIMIT OF WORK	LOW
MATCH EXISTING	ME
NOW OR FORMERLY	N/F
NYLOPLAST DRAINAGE STRUCTURE	NP
OUTLET CONTROL STRUCTURE	OCS
PRECAST CONCRETE CURB	PCC
RADIUS	X'R
RIM ELEVATION	R=
ROOF DRAIN	RD
REMOVE	REM
SLOPED GRANITE CURB	SGC
SPEED LIMIT	SL
SUBSURFACE INFILTRATION SYSTEM	SIS
TOP OF CURB	TC
TOP OF FOUNDATION	TF
TYPICAL	TYP.
UNDERDRAIN	UD
UTILITY POLE	UP
WATER QUALITY UNIT	WQU
VERTICAL GRANITE CURB	VGC

NOT FOR CONSTRUCTION

CDG PROJECT #: 19024

REVISIONS:

REV	DATE	COMMENT
1		
2		
3		
4		
5		
6		
7		
8		
9		
10		

CITY COUNCIL:

SEAL:

COMMONWEALTH OF MASSACHUSETTS
MATTHEW A. LEIDNER
CIVIL
No. 45641
REGISTERED PROFESSIONAL ENGINEER

MATTHEW A. LEIDNER, P.E.

PREPARED BY:

CIVIL DESIGN GROUP, LLC
21 HIGH STREET, SUITE 207
NORTH ANDOVER, MA 01845
www.cdgengineering.com
p: 978-794-5400 f: 978-965-3971

PREPARED FOR:

115 FLANDERS ROAD
SUITE 200
WESTBOROUGH, MA 01581
www.pulte.com

PROJECT:

HIGHLAND AT VALE

THE VALE
WOBURN, MASSACHUSETTS

SCALE:

SHEET:

LEGEND & NOTES

2

DATE: 04/30/2020

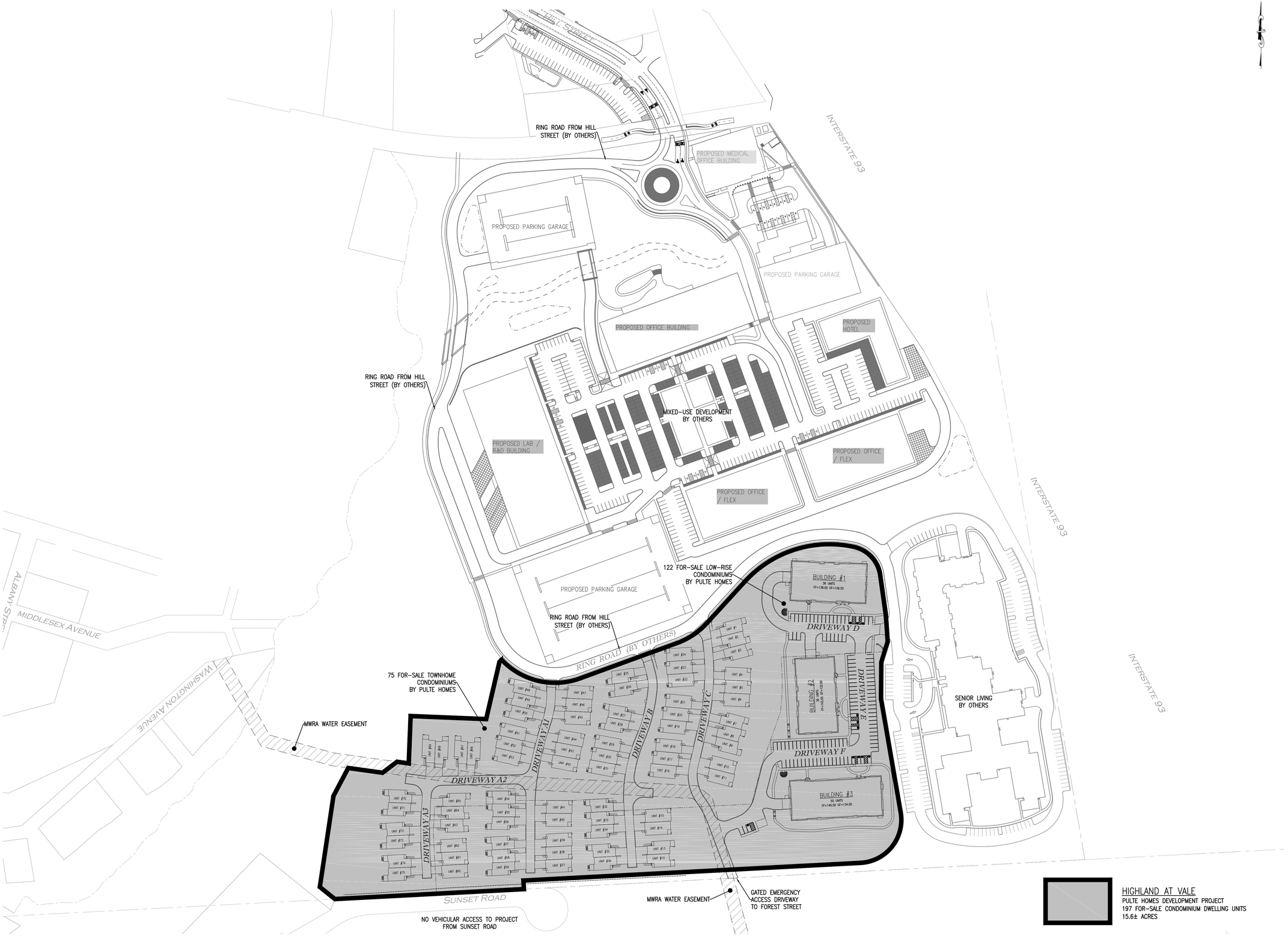

NOT FOR CONSTRUCTION

CDG PROJECT #: 19024

REVISIONS:

REV	DATE	COMMENT
1		
2		
3		
4		
5		
6		
7		
8		
9		
10		

CITY COUNCIL:

SEAL:

COMMONWEALTH OF MASSACHUSETTS
MATTHEW A. LEIDNER
CIVIL
No. 45641
REGISTERED PROFESSIONAL ENGINEER

MATTHEW A. LEIDNER, P.E.

PREPARED BY:

CIVIL DESIGN GROUP, LLC

21 HIGH STREET, SUITE 207
NORTH ANDOVER, MA 01845
www.cdgengineering.com
p: 978-794-5400 f: 978-965-3971

PREPARED FOR:

Pulte HOMES

115 FLANDERS ROAD
SUITE 200
WESTBOROUGH, MA 01581
www.pulte.com

PROJECT:

HIGHLAND AT VALE

THE VALE
WOBURN, MASSACHUSETTS

SCALE:

100 0 50 100 200

GRAPHIC SCALE IN FEET

SHEET:

SITE CONTEXT PLAN

3

DATE: 04/30/2020

ZONING SUMMARY

UNDERLYING DISTRICT(S): INDUSTRIAL GENERAL (I-G)
OVERLAY DISTRICT(S): TECHNOLOGY AND BUSINESS MIXED USE OVERLAY DISTRICT (TBOD)

	REQUIRED	PROVIDED
LOT SIZE	NO MINIMUM	15.57± ACRES (TOTAL OF PULTE LOTS)
MIN. DISTRICT SIZE	50 ACRES	60.95± ACRES (PER APPROVED MASTER PLAN)
MIN. STREET FRONTAGE	100 FEET	440± FEET (FRONTAGE OF PULTE LOTS ON SUNSET ROAD)
MIN. LANDSCAPED USEABLE OPEN SPACE	25%	54%± (8.40 ACRES / 15.57 ACRES = 54% FOR THE PULTE LOTS)
MIN. FRONT YARD SETBACK	25 FEET	35± FEET
MIN. SIDE YARD SETBACK	30 FEET	NOT APPLICABLE TO PULTE PROJECT
MIN. REAR YARD SETBACK	25 FEET	121.9± FEET
MAX. BUILDING HEIGHT	80 FEET	60± FEET (MEASURED FROM BASEMENT GARAGE FLOOR TO TOP OF ROOF)
MAX. BUILDING HEIGHT WITHIN 150' OF A RESIDENTIAL ZONE ON THE ZONING MAP OF WOBURN	35 FEET	NOT APPLICABLE TO PULTE PROJECT
MIN. NUMBER OF PARKING SPACES	394 SPACES (197 DWELLINGS @ 2/DWELLING)	547 SPACES (267 SURFACE + 280 GARAGE)

SUMMARY OF PARKING PROVIDED

	SURFACE	GARAGE	TOTAL
TOWNHOMES	150	150	300
LOW-RISE BUILDINGS	114	130	244
RECYCLING AREA	3	0	3
PROJECT TOTAL	267	280	547

NOTE: LOW RISE BUILDING GARAGES INCLUDE TANDEM SPACES, WHICH ARE ASSIGNED TO OCCUPANTS OF THE BUILDING AS REQUIRED BY WOBURN ZONING ORDINANCE SECTION 8.4.3.4.

NOT FOR CONSTRUCTION

CDG PROJECT #: 19024

REVISIONS:

REV	DATE	COMMENT
1		
2		
3		
4		
5		
6		
7		
8		
9		
10		

CITY COUNCIL:

SEAL:

COMMONWEALTH OF MASSACHUSETTS
MATTHEW A. LEIDNER
CIVIL
No. 45641
REGISTERED PROFESSIONAL ENGINEER

MATTHEW A. LEIDNER, P.E.

PREPARED BY:

CIVIL DESIGN GROUP, LLC
21 HIGH STREET, SUITE 207
NORTH ANDOVER, MA 01845
www.cdgengineering.com
p: 978-794-5400 f: 978-965-3971

PREPARED FOR:

PULTE HOMES
115 FLANDERS ROAD
SUITE 200
WESTBOROUGH, MA 01581
www.pulte.com

PROJECT:

HIGHLAND AT VALE

THE VALE
WOBURN, MASSACHUSETTS

SCALE: 50 0 25 50 100
GRAPHIC SCALE IN FEET

SHEET:

OVERALL LAYOUT PLAN

4

DATE: 04/30/2020

NOT FOR CONSTRUCTION

CDG PROJECT #: 19024

REVISIONS:

REV	DATE	COMMENT
1		
2		
3		
4		
5		
6		
7		
8		
9		
10		

CITY COUNCIL:

SEAL:

COMMONWEALTH OF MASSACHUSETTS
MATTHEW A. LEIDNER
CIVIL
No. 45641
REGISTERED PROFESSIONAL ENGINEER

MATTHEW A. LEIDNER, P.E.

PREPARED BY:

CIVIL DESIGN GROUP, LLC
21 HIGH STREET, SUITE 207
NORTH ANDOVER, MA 01845
www.cdgengineering.com
p: 978-794-5400 f: 978-965-3971

PREPARED FOR:

PULTE HOMES
115 FLANDERS ROAD
SUITE 200
WESTBOROUGH, MA 01581
www.pulte.com

PROJECT:

HIGHLAND AT VALE

THE VALE
WOBURN, MASSACHUSETTS

SCALE:

40 0 20 40 80
GRAPHIC SCALE IN FEET

SHEET:

LAYOUT PLAN A

5

DATE: 04/30/2020

NOT FOR CONSTRUCTION

CDG PROJECT #: 19024

REVISIONS:

REV	DATE	COMMENT
1		
2		
3		
4		
5		
6		
7		
8		
9		
10		

CITY COUNCIL:

SEAL:

COMMONWEALTH OF MASSACHUSETTS
MATTHEW A. LEIDNER
CIVIL
No. 45641
REGISTERED PROFESSIONAL ENGINEER

MATTHEW A. LEIDNER, P.E.

PREPARED BY:

CIVIL DESIGN GROUP, LLC
21 HIGH STREET, SUITE 207
NORTH ANDOVER, MA 01845
www.cdgengineering.com
p: 978-794-5400 f: 978-965-3971

PREPARED FOR:

PULTE HOMES
115 FLANDERS ROAD
SUITE 200
WESTBOROUGH, MA 01581
www.pulte.com

PROJECT:

HIGHLAND AT VALE

THE VALE
WOBURN, MASSACHUSETTS

SCALE:

40 0 20 40 80
GRAPHIC SCALE IN FEET

SHEET:

LAYOUT
PLAN B

6

DATE: 04/30/2020

STRUCTURAL RETAINING WALL SUMMARY			
WALL #	WALL HEIGHT (ft)	FENCE HEIGHT (ft)	TOTAL HEIGHT (ft)
1	29±	3.5	32.5±
2	11±	3.5	14.5±
3	12±	3.5	15.5±
4	21±	3.5	24.5±
5	16±	3.5	19.5±
6	16±	3.5	19.5±
7	16±	3.5	19.5±

NOTE: WALL HEIGHT REFERS TO PORTION OF WALL EXPOSED ABOVE GRADE.

NOT FOR CONSTRUCTION

CDG PROJECT #: 19024

REVISIONS:

REV	DATE	COMMENT
1		
2		
3		
4		
5		
6		
7		
8		
9		
10		

CITY COUNCIL:

SEAL:

COMMONWEALTH OF MASSACHUSETTS
MATTHEW A. LEIDNER
CIVIL
No. 45641
REGISTERED PROFESSIONAL ENGINEER

MATTHEW A. LEIDNER, P.E.

PREPARED BY:

CIVIL DESIGN GROUP, LLC
21 HIGH STREET, SUITE 207
NORTH ANDOVER, MA 01845
www.cdgengineering.com
p: 978-794-5400 f: 978-965-3971

PREPARED FOR:

Pulte HOMES
115 FLANDERS ROAD
SUITE 200
WESTBOROUGH, MA 01581
www.pulte.com

PROJECT:

HIGHLAND AT VALE

THE VALE
WOBURN, MASSACHUSETTS

SCALE:

40 0 20 40 80
GRAPHIC SCALE IN FEET

SHEET:

GRADING & DRAINAGE PLAN A

7

DATE: 04/30/2020

CATCH BASIN SCHEDULE		
NAME	GRATE	INV. (OUT)
CB-1A	127.47	124.50 (12", DMH-1)
CB-1B	133.00	130.00 (12", DMH-1)
CB-2A	121.63	118.60 (12", DMH-2)
CB-2B	116.00	113.00 (12", DMH-2)
CB-3	120.42	117.40 (12", DMH-3)
CB-5A	103.55	100.50 (12", DMH-5)
CB-5B	103.55	100.50 (12", DMH-5)
CB-7A	105.00	98.25 (12", CB-7B)
CB-7B	101.00	96.00 (12", CB-7C)
CB-7C	93.00	89.90 (12", DMH-7)
CB-7D	115.00	102.75 (12", DMH-7)
CB-8	95.06	92.05 (12", DMH-8)
CB-9	94.00	91.00 (12", DMH-9)
CB-11	104.50	101.50 (12", DMH-11)
CB-12A	100.48	97.50 (12", DMH-12)
CB-12B	100.60	97.60 (12", DMH-12)
CB-12C	99.75	96.50 (12", DMH-12)
CB-13	99.00	96.00 (12", DMH-13)
CB-14A	95.56	92.60 (12", DMH-14)
CB-14B	95.55	92.60 (12", DMH-14)
CB-16A	97.25	90.00 (12", CB-16B)
CB-16B	91.80	88.80 (12", DMH-16)
CB-17	89.80	86.80 (12", DMH-17)
CB-19A	81.00	78.00 (12", DMH-19)
CB-19B	84.50	78.00 (12", DMH-19)
CB-20	78.00	75.00 (12", DMH-20)
CB-22	76.50	73.50 (12", DMH-22)
CB-23	78.50	75.50 (12", DMH-23)
CB-24A	77.25	74.25 (12", DMH-24)
CB-24B	77.30	74.25 (12", DMH-24)
CB-24C	77.00	74.00 (12", DMH-24)
CB-26A	79.24	75.75 (12", DMH-26)
CB-26B	79.54	76.05 (12", DMH-26)
CB-27A	77.40	74.25 (12", DMH-27)
CB-27B	77.41	74.25 (12", DMH-27)
CB-31	59.60	56.60 (12", DMH-31)
CB-32	57.60	54.30 (12", DMH-32)
CB-33A	57.42	54.40 (12", DMH-33)
CB-33B	57.42	54.40 (12", DMH-33)
CB-34	56.50	53.50 (12", DMH-34)
CB-35	59.00	56.00 (12", DMH-35)
CB-37A	132.32	129.30 (12", DMH-37)
CB-37B	132.30	129.30 (12", DMH-37)
CB-37C	131.50	129.00 (12", DMH-37)
CB-39A	140.10	137.10 (12", DMH-39)
CB-39B	140.10	137.10 (12", DMH-39)
CB-39C	142.15	139.15 (12", DMH-39)
CB-42A	138.89	135.90 (12", DMH-42)
CB-42B	141.72	138.70 (12", DMH-42)
CB-44A	137.47	133.95 (12", DMH-44)
CB-44B	138.43	130.50 (12", DMH-44)
CB-45	134.68	129.60 (12", DMH-45)
CB-47A	125.10	120.10 (12", DMH-47)
CB-47B	125.10	120.10 (12", DMH-47)

DRAIN MANHOLE SCHEDULE			
NAME	RIM	INV. (IN)	INV. (OUT)
DMH-1	128.00	124.40 (12", CB-1A) 124.40 (12", CB-1B)	123.00 (12", DMH-2)
DMH-2	121.00	118.00 (12", DMH-1) 118.00 (12", CB-2A) 112.55 (12", CB-2B)	112.45 (12", DMH-3)
DMH-3	118.66	115.60 (12", CB-3) 112.25 (12", DMH-2)	112.15 (12", DMH-4)
DMH-4	115.00	111.90 (12", DMH-3)	111.80 (12", DMH-5)
DMH-5	102.97	99.90 (12", CB-5A) 99.90 (12", CB-5B) 98.90 (12", DMH-4)	98.80 (12", DMH-6)
DMH-6	95.35	89.00 (12", DMH-5)	88.90 (12", DMH-8)
DMH-7	95.00	89.65 (12", CB-7C) 92.00 (12", CB-7D)	89.55 (12", DMH-8)
DMH-8	94.83	88.50 (12", DMH-7) 88.50 (12", DMH-6) 91.75 (12", CB-8)	86.50 (12", DMH-9)
DMH-9	94.50	90.80 (12", CB-9) 86.35 (12", DMH-8)	85.85 (18", DMH-10)
DMH-10	90.16	84.00 (18", DMH-9)	82.00 (18", DMH-17)
DMH-11	105.13	101.10 (12", CB-11)	101.00 (12", DMH-12)
DMH-12	100.30	97.10 (12", DMH-11) 97.10 (12", CB-12B) 97.35 (12", CB-12A) 96.15 (12", CB-12C)	96.05 (12", DMH-13)
DMH-13	98.71	95.70 (12", CB-13) 95.70 (12", DMH-12)	95.60 (12", DMH-14)
DMH-14	95.52	92.50 (12", CB-14A) 92.50 (12", DMH-13) 92.50 (12", CB-14B)	92.40 (12", DMH-15)
DMH-15	93.33	90.30 (12", DMH-14)	90.20 (12", DMH-16)
DMH-16	91.76	88.50 (12", DMH-15) 88.50 (12", CB-16B)	88.40 (12", DMH-17)
DMH-17	88.49	86.55 (12", DMH-16) 81.85 (18", DMH-10) 86.55 (12", CB-17)	81.75 (18", DMH-18)
DMH-18	86.50	80.00 (18", DMH-17)	78.00 (18", DMH-19)
DMH-19	81.50	77.50 (18", DMH-18) 77.50 (12", CB-19B) 77.50 (12", CB-19A)	77.40 (18", DMH-20)
DMH-20	78.15	74.65 (18", DMH-19) 74.90 (12", CB-20)	74.15 (18", DMH-21)
DMH-21	76.50	72.50 (18", DMH-20)	72.40 (18", DMH-22)
DMH-22	76.75	73.45 (12", CB-22) 72.25 (18", DMH-21)	71.75 (24", DMH-25)
DMH-23	81.04	75.20 (12", CB-23)	75.10 (12", DMH-24)
DMH-24	77.43	73.65 (12", CB-24C) 74.00 (12", CB-24B) 73.95 (12", CB-24A) 73.65 (12", DMH-23)	73.50 (12", DMH-25)
DMH-25	77.41	71.35 (24", DMH-22) 72.75 (12", DMH-24)	68.50 (24", DMH-28)
DMH-26	79.40	75.70 (12", CB-26B) 75.70 (12", CB-26A)	75.60 (12", DMH-27)
DMH-27	77.49	74.15 (12", CB-27B) 74.15 (12", CB-27A) 74.15 (12", DMH-26)	74.05 (12", DMH-28)
DMH-28	77.10	68.20 (24", DMH-25) 73.95 (12", DMH-27)	66.50 (24", DMH-29)
DMH-29	70.37	64.50 (24", DMH-28)	60.00 (24", DMH-30)
DMH-30	61.80	57.80 (24", DMH-29)	57.70 (24", DMH-31)
DMH-31	60.75	56.75 (24", DMH-30) 56.40 (12", CB-31)	56.30 (24", DMH-32)
DMH-32	58.26	53.50 (24", DMH-31) 54.00 (12", CB-32)	53.40 (24", DMH-33)
DMH-33	57.62	52.25 (24", DMH-32) 54.15 (12", CB-33B) 54.15 (12", CB-33A)	52.15 (24", DMH-34)
DMH-34	57.96	50.00 (12", CB-34) 51.40 (24", DMH-33)	49.90 (24", DMH-35)
DMH-35	59.50	47.60 (24", DMH-34) 55.75 (12", CB-35)	47.30 (24", DET. BASIN)
DMH-36	133.50	130.60 (12", RD-3)	130.50 (12", DMH-37)
DMH-37	132.59	129.15 (12", CB-37B) 129.15 (12", CB-37A) 128.70 (12", CB-37C) 129.15 (12", DMH-36)	128.60 (12", DMH-38)
DMH-38	139.89	128.05 (12", DMH-37)	127.95 (12", DMH-39)
DMH-39	140.39	127.80 (12", DMH-38) 136.65 (12", CB-39B) 136.65 (12", CB-39A) 137.25 (12", CB-39C)	127.70 (12", DMH-40)
DMH-40	133.50	126.35 (12", DMH-39)	126.25 (12", DMH-41)

DRAIN MANHOLE SCHEDULE			
NAME	RIM	INV. (IN)	INV. (OUT)
DMH-41	131.50	122.95 (12", DMH-40) 128.00 (8", TD-1)	122.85 (12", DMH-46)
DMH-42	138.84	135.65 (12", CB-42B) 135.65 (12", CB-42A)	135.55 (12", DMH-43)
DMH-43	138.29	135.25 (12", DMH-42)	135.15 (12", DMH-44)
DMH-44	137.26	133.50 (12", DMH-43) 133.50 (12", CB-44A) 129.90 (12", CB-44B)	129.80 (12", DMH-45)
DMH-45	134.92	128.40 (12", DMH-44) 128.40 (12", CB-45)	128.30 (12", DMH-46)
DMH-46	132.05	125.00 (12", DMH-45) 121.55 (12", DMH-41)	121.30 (12", SDS-DET-MF-1 INLET-1)
DMH-47	125.26	119.50 (12", CB-47A) 119.50 (12", CB-47B)	119.25 (12", SDS-DET-MF-1 INLET-2)

STRUCTURAL RETAINING WALL SUMMARY			
WALL #	WALL HEIGHT (ft)	FENCE HEIGHT (ft)	TOTAL HEIGHT (ft)
1	29±	3.5	32.5±
2	11±	3.5	14.5±
3	12±	3.5	15.5±
4	21±	3.5	24.5±
5	16±	3.5	19.5±
6	16±	3.5	19.5±
7	16±	3.5	19.5±
NOTE: WALL HEIGHT REFERS TO PORTION OF WALL EXPOSED ABOVE GRADE.			

NOT FOR CONSTRUCTION

CDG PROJECT #: 19024

REVISIONS:

REV	DATE	COMMENT
1		
2		
3		
4		
5		
6		
7		
8		
9		
10		

CITY COUNCIL:

SEAL:

COMMONWEALTH OF MASSACHUSETTS
MATTHEW A. LEIDNER
CIVIL
No. 45641
REGISTERED PROFESSIONAL ENGINEER

MATTHEW A. LEIDNER, P.E.

PREPARED BY:

CIVIL DESIGN GROUP, LLC
21 HIGH STREET, SUITE 207
NORTH ANDOVER, MA 01845
www.cdgengineering.com
p: 978-794-5400 f: 978-965-3971

PREPARED FOR:

Pulte HOMES
115 FLANDERS ROAD
SUITE 200
WESTBOROUGH, MA 01581
www.pulte.com

PROJECT:

HIGHLAND AT VALE

THE VALE
WOBURN, MASSACHUSETTS

SCALE:

40 0 20 40 80
GRAPHIC SCALE IN FEET

SHEET:

GRADING & DRAINAGE PLAN A

8

DATE: 04/30/2020

SEWER MANHOLE SCHEDULE			
NAME	RIM	INV. (IN)	INV. (OUT)
GT-20	141.56	126.90 (4", BLDG 3 FLOOR DRN)	126.55 (4", SMH-20)
GT-22	132.10	125.50 (4", BLDG 2 FLOOR DRN)	125.15 (4", SMH-22)
GT-25	134.50	120.25 (4", BLDG 1 FLOOR DRN)	119.90 (4", SMH-25)
SMH-1	104.91		95.90 (8", SMH-2)
SMH-2	100.93	90.55 (8", SMH-1)	89.55 (8", SMH-3)
SMH-3	97.91	86.55 (8", SMH-2)	86.45 (8", SMH-4)
SMH-4	94.27	85.25 (8", SMH-3)	85.15 (8", SMH-5)
SMH-5	92.32	83.30 (8", SMH-4)	83.20 (8", SMH-6)
SMH-6	91.24	82.25 (8", SMH-5)	82.15 (8", SMH-PULTE-2)
SMH-8	80.83		71.80 (8", SMH-9)
SMH-9	77.44	66.25 (8", SMH-8)	65.25 (8", SMH-10)
SMH-10	77.40	64.90 (8", SMH-9)	64.80 (8", SMH-11)
SMH-11	81.25	64.00 (8", SMH-10)	63.90 (8", SMH-PULTE-1)
SMH-12	59.17		53.00 (2", FM-SMH-13)
SMH-13	82.85	82.76 (2", SMH-12-FM)	64.60 (8", SMH-PULTE-1)
SMH-15	118.40		108.00 (8", SMH-16)

SEWER MANHOLE SCHEDULE			
NAME	RIM	INV. (IN)	INV. (OUT)
SMH-16	106.69	97.50 (8", SMH-15)	97.40 (8", SMH-17)
SMH-17	100.34	91.30 (8", SMH-16)	91.20 (8", SMH-18)
SMH-18	96.17	86.70 (8", SMH-17)	86.60 (8", SMH-PULTE-3)
SMH-20	141.26	126.90 (8", BLDG 3 SAN) 126.25 (4", GT-20)	126.15 (8", SMH-21)
SMH-21	131.00	123.75 (8", SMH-20)	123.65 (8", SMH-22)
SMH-22	135.03	124.00 (4", GT-22) 123.35 (8", SMH-21) 124.00 (8", BLDG 2 SAN)	123.25 (8", SMH-23)
SMH-23	135.27	122.95 (8", SMH-22)	122.85 (8", SMH-24)
SMH-24	138.23	122.30 (8", SMH-23)	122.20 (8", SMH-25)
SMH-25	133.50	121.70 (8", SMH-24) 119.50 (4", GT-25) 120.00 (8", BLDG 1 SAN)	119.40 (8", SMH-RR-122)
SMH-PULTE-1	82.73	63.65 (8", SMH-11) 64.55 (8", SMH-13)	63.55 (8", SMH-RR-111)
SMH-PULTE-2	90.19	81.00 (8", SMH-6)	79.52 (8", SMH-RR-113)
SMH-PULTE-3	94.50	86.00 (8", SMH-18)	85.90 (8", SMH-RR-115)

NOT FOR CONSTRUCTION

CDG PROJECT #: 19024

REVISIONS:

REV	DATE	COMMENT
1		
2		
3		
4		
5		
6		
7		
8		
9		
10		

CITY COUNCIL:

SEAL:

COMMONWEALTH OF MASSACHUSETTS
MATTHEW A. LEIDNER
CIVIL
No. 45641
REGISTERED PROFESSIONAL ENGINEER

MATTHEW A. LEIDNER, P.E.

PREPARED BY:

CIVIL DESIGN GROUP, LLC
21 HIGH STREET, SUITE 207
NORTH ANDOVER, MA 01845
www.cdgengineering.com
p: 978-794-5400 f: 978-965-3971

PREPARED FOR:

Pulte HOMES
115 FLANDERS ROAD
SUITE 200
WESTBOROUGH, MA 01581
www.pulte.com

PROJECT:

HIGHLAND AT VALE

THE VALE
WOBURN, MASSACHUSETTS

SCALE:

40 0 20 40 80

GRAPHIC SCALE IN FEET

SHEET:

UTILITY PLAN A

9

DATE: 04/30/2020

SEWER MANHOLE SCHEDULE			
NAME	RIM	INV. (IN)	INV. (OUT)
GT-20	141.56	126.90 (4", BLDG 3 FLOOR DRN)	126.55 (4", SMH-20)
GT-22	132.10	125.50 (4", BLDG 2 FLOOR DRN)	125.15 (4", SMH-22)
GT-25	134.50	120.25 (4", BLDG 1 FLOOR DRN)	119.90 (4", SMH-25)
SMH-1	104.91		95.90 (8", SMH-2)
SMH-2	100.93	90.55 (8", SMH-1)	89.55 (8", SMH-3)
SMH-3	97.91	86.55 (8", SMH-2)	86.45 (8", SMH-4)
SMH-4	94.27	85.25 (8", SMH-3)	85.15 (8", SMH-5)
SMH-5	92.32	83.30 (8", SMH-4)	83.20 (8", SMH-6)
SMH-6	91.24	82.25 (8", SMH-5)	82.15 (8", SMH-PULTE-2)
SMH-8	80.83		71.80 (8", SMH-9)
SMH-9	77.44	66.25 (8", SMH-8)	65.25 (8", SMH-10)
SMH-10	77.40	64.90 (8", SMH-9)	64.80 (8", SMH-11)
SMH-11	81.25	64.00 (8", SMH-10)	63.90 (8", SMH-PULTE-1)
SMH-12	59.17		53.00 (2", FM-SMH-13)
SMH-13	82.85	82.76 (2", SMH-12-FM)	64.60 (8", SMH-PULTE-1)
SMH-15	118.40		108.00 (8", SMH-16)

SEWER MANHOLE SCHEDULE			
NAME	RIM	INV. (IN)	INV. (OUT)
SMH-16	106.69	97.50 (8", SMH-15)	97.40 (8", SMH-17)
SMH-17	100.34	91.30 (8", SMH-16)	91.20 (8", SMH-18)
SMH-18	96.17	86.70 (8", SMH-17)	86.60 (8", SMH-PULTE-3)
SMH-20	141.26	126.90 (8", BLDG 3 SAN) 126.25 (4", GT-20)	126.15 (8", SMH-21)
SMH-21	131.00	123.75 (8", SMH-20)	123.65 (8", SMH-22)
SMH-22	135.03	124.00 (4", GT-22) 123.35 (8", SMH-21) 124.00 (8", BLDG 2 SAN)	123.25 (8", SMH-23)
SMH-23	135.27	122.95 (8", SMH-22)	122.85 (8", SMH-24)
SMH-24	138.23	122.30 (8", SMH-23)	122.20 (8", SMH-25)
SMH-25	133.50	121.70 (8", SMH-24) 119.50 (4", GT-25) 120.00 (8", BLDG 1 SAN)	119.40 (8", SMH-RR-122)
SMH-PULTE-1	82.73	63.65 (8", SMH-11) 64.55 (8", SMH-13)	63.55 (8", SMH-RR-111)
SMH-PULTE-2	90.19	81.00 (8", SMH-6)	79.52 (8", SMH-RR-113)
SMH-PULTE-3	94.50	86.00 (8", SMH-18)	85.90 (8", SMH-RR-115)

NOT FOR CONSTRUCTION

CDG PROJECT #: 19024

REVISIONS:

REV	DATE	COMMENT
1		
2		
3		
4		
5		
6		
7		
8		
9		
10		

CITY COUNCIL:

SEAL:

COMMONWEALTH OF MASSACHUSETTS
MATTHEW A. LEIDNER
CIVIL
No. 45641
REGISTERED PROFESSIONAL ENGINEER

MATTHEW A. LEIDNER, P.E.

PREPARED BY:

CIVIL DESIGN GROUP, LLC

21 HIGH STREET, SUITE 207
NORTH ANDOVER, MA 01845
www.cdgengineering.com
p: 978-794-5400 f: 978-965-3971

PREPARED FOR:

PULTE HOMES

115 FLANDERS ROAD
SUITE 200
WESTBOROUGH, MA 01581
www.pulte.com

PROJECT:

HIGHLAND AT VALE

THE VALE
WOBURN, MASSACHUSETTS

SCALE:

40 0 20 40 80

GRAPHIC SCALE IN FEET

SHEET:

UTILITY PLAN B

10

DATE: 04/30/2020

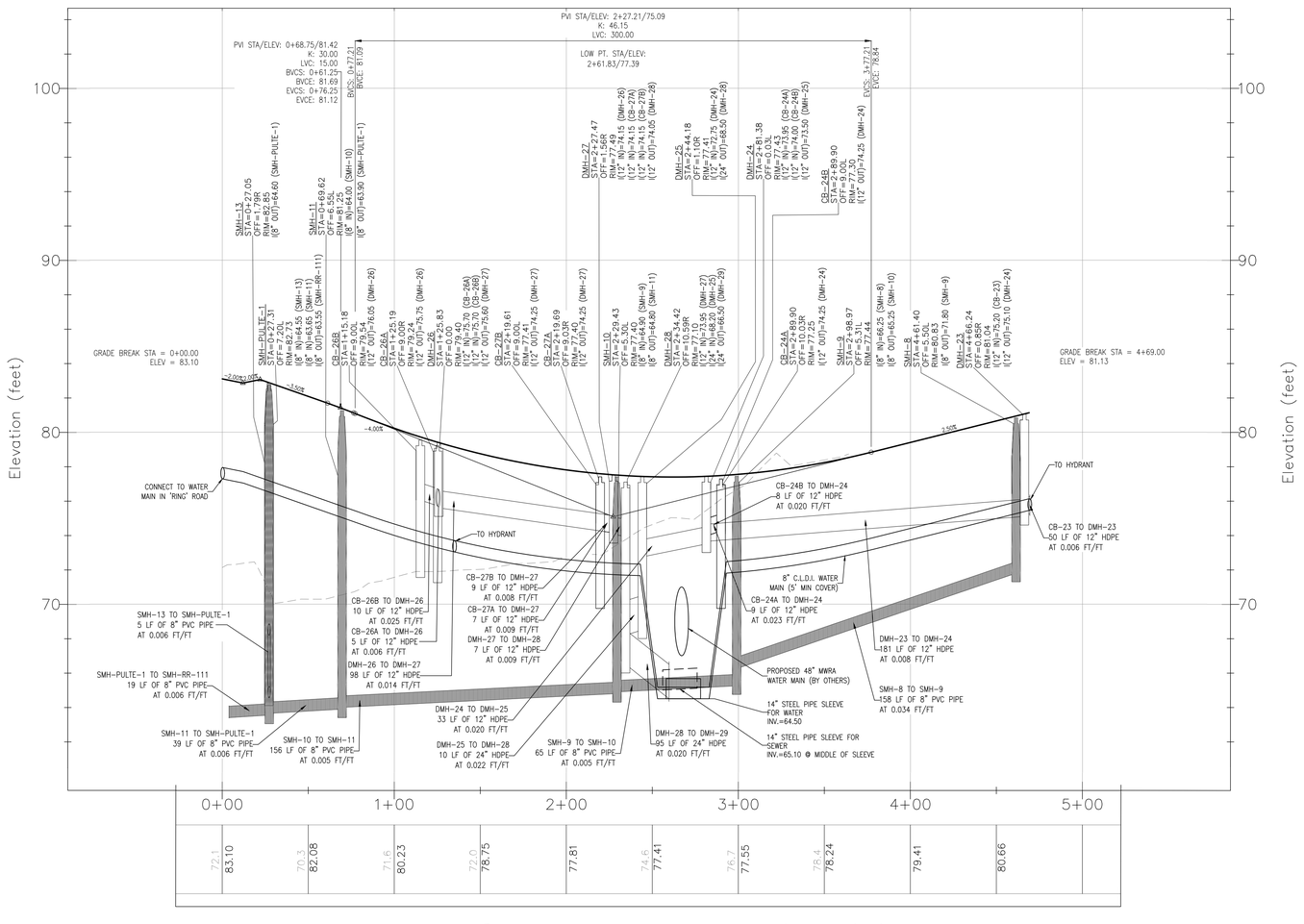

PROFILE: DRIVEWAY A1
STA 0+00 THROUGH 4+69

HORIZONTAL SCALE: 1" = 40', VERTICAL SCALE: 1" = 4'

NOT FOR CONSTRUCTION

CDG PROJECT #: 19024

REVISIONS:

REV	DATE	COMMENT
1		
2		
3		
4		
5		
6		
7		
8		
9		
10		

CITY COUNCIL:

SEAL:

COMMONWEALTH OF MASSACHUSETTS
MATTHEW A. LEIDNER
CIVIL
No. 45641
REGISTERED PROFESSIONAL ENGINEER

MATTHEW A. LEIDNER, P.E.

PREPARED BY:

CIVIL DESIGN GROUP, LLC
21 HIGH STREET, SUITE 207
NORTH ANDOVER, MA 01845
www.cdgengineering.com
p: 978-794-5400 f: 978-965-3971

PREPARED FOR:

Pulte HOMES
115 FLANDERS ROAD
SUITE 200
WESTBOROUGH, MA 01581
www.pulte.com

PROJECT:

HIGHLAND AT VALE

THE VALE
WOBURN, MASSACHUSETTS

SCALE:
40 0 20 40 80
GRAPHIC SCALE IN FEET

SHEET:

PLAN & PROFILE

11

DATE: 04/30/2020

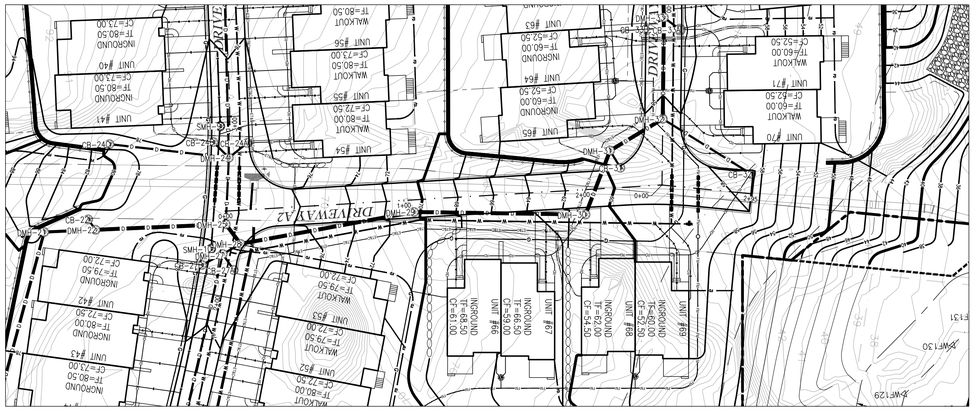

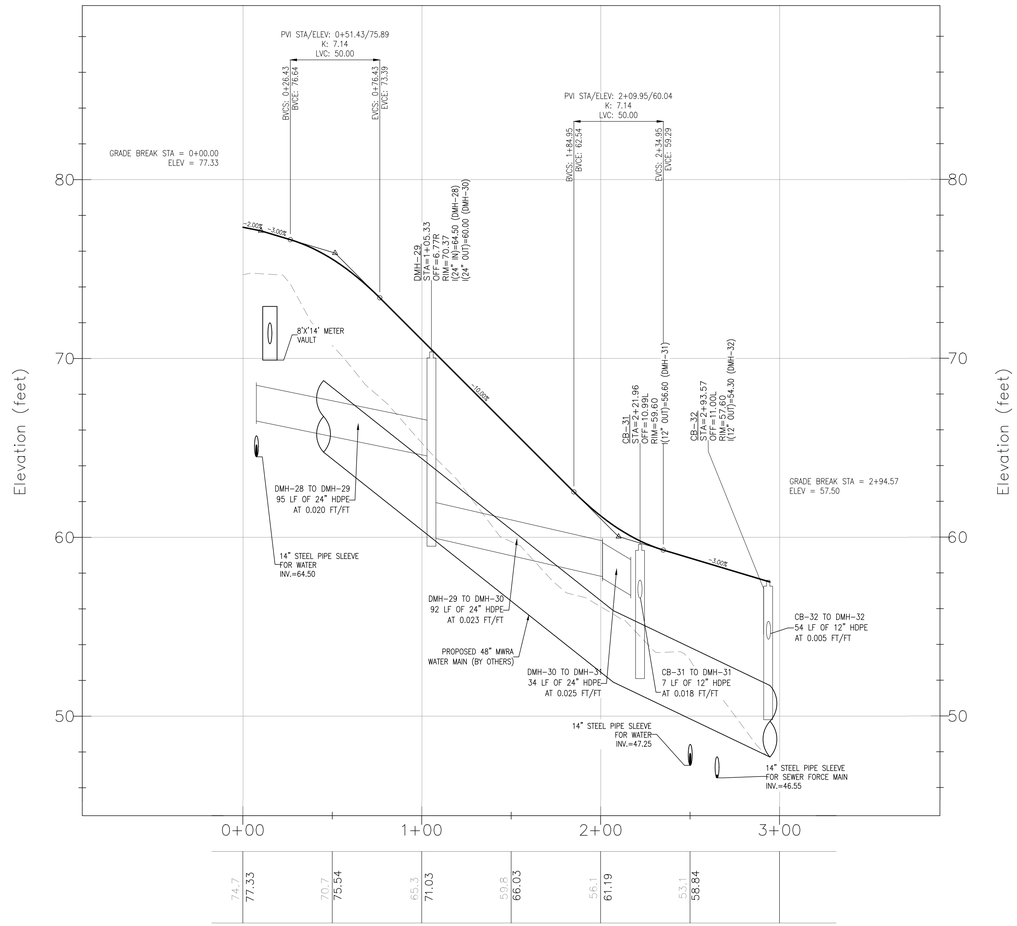

PROFILE: DRIVEWAY A2
STA 0+00 THROUGH 2+94.57

HORIZONTAL SCALE: 1" = 40', VERTICAL SCALE: 1" = 4'

NOT FOR CONSTRUCTION

CDG PROJECT #: 19024

REVISIONS:

REV	DATE	COMMENT
1		
2		
3		
4		
5		
6		
7		
8		
9		
10		

CITY COUNCIL:

SEAL:

COMMONWEALTH OF MASSACHUSETTS
MATTHEW A. LEIDNER
CIVIL
No. 45641
REGISTERED PROFESSIONAL ENGINEER

MATTHEW A. LEIDNER, P.E.

PREPARED BY:

CIVIL DESIGN GROUP, LLC

21 HIGH STREET, SUITE 207
NORTH ANDOVER, MA 01845
www.cdgengineering.com
p: 978-794-5400 f: 978-965-3971

PREPARED FOR:

PULTE HOMES

115 FLANDERS ROAD
SUITE 200
WESTBOROUGH, MA 01581
www.pulte.com

PROJECT:

HIGHLAND AT VALE

THE VALE
WOBURN, MASSACHUSETTS

SCALE:

40 0 20 40 80

GRAPHIC SCALE IN FEET

SHEET:

PLAN & PROFILE

12

DATE: 04/30/2020

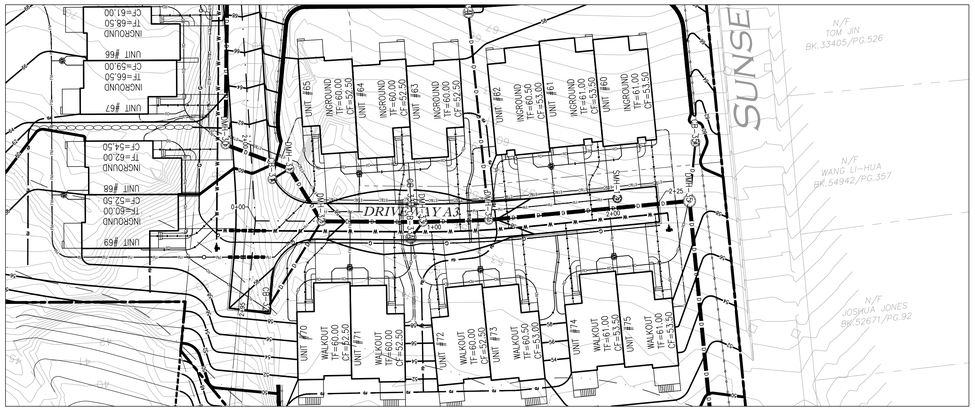

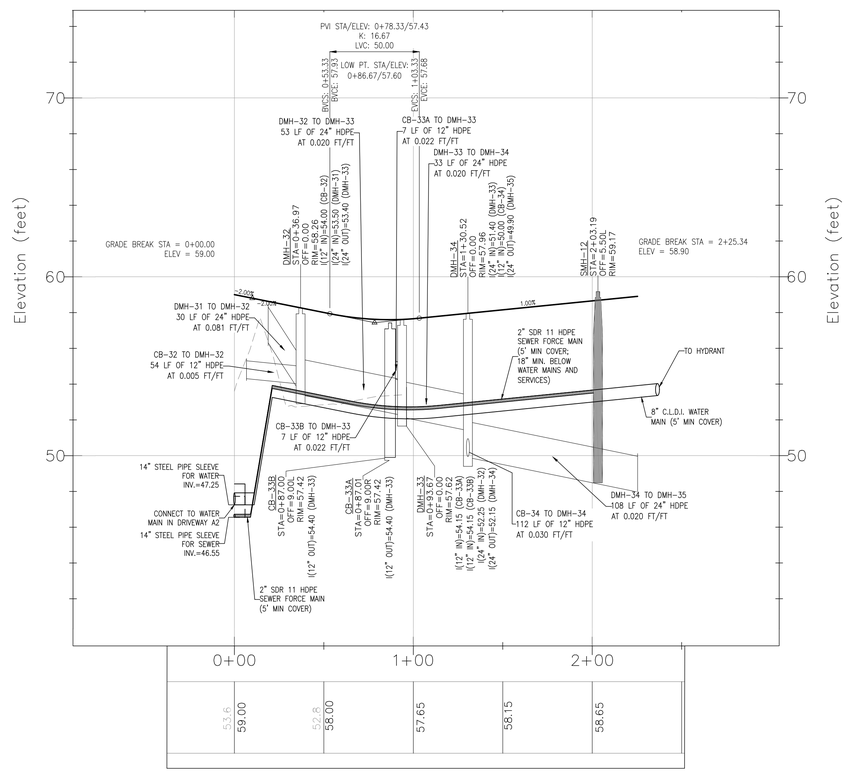

PROFILE: DRIVEWAY A3
STA 0+00 THROUGH 2+25.34

HORIZONTAL SCALE: 1" = 40', VERTICAL SCALE: 1" = 4'

NOT FOR CONSTRUCTION

CDG PROJECT #: 19024

REVISIONS:

REV	DATE	COMMENT
1		
2		
3		
4		
5		
6		
7		
8		
9		
10		

CITY COUNCIL:

SEAL:

COMMONWEALTH OF MASSACHUSETTS
MATTHEW A. LEIDNER
CIVIL
No. 45641
REGISTERED PROFESSIONAL ENGINEER

MATTHEW A. LEIDNER, P.E.

PREPARED BY:

CIVIL DESIGN GROUP, LLC
21 HIGH STREET, SUITE 207
NORTH ANDOVER, MA 01845
www.cdgengineering.com
p: 978-794-5400 f: 978-965-3971

PREPARED FOR:

PULTE HOMES
115 FLANDERS ROAD
SUITE 200
WESTBOROUGH, MA 01581
www.pulte.com

PROJECT:

HIGHLAND AT VALE

THE VALE
WOBURN, MASSACHUSETTS

SCALE:
40 0 20 40 80
GRAPHIC SCALE IN FEET

SHEET:

PLAN & PROFILE

13

DATE: 04/30/2020

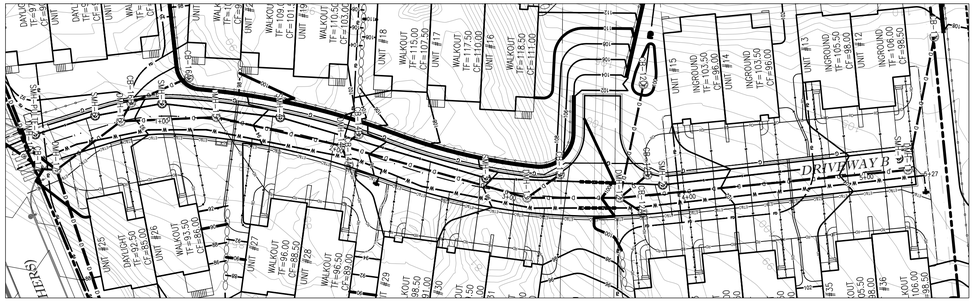

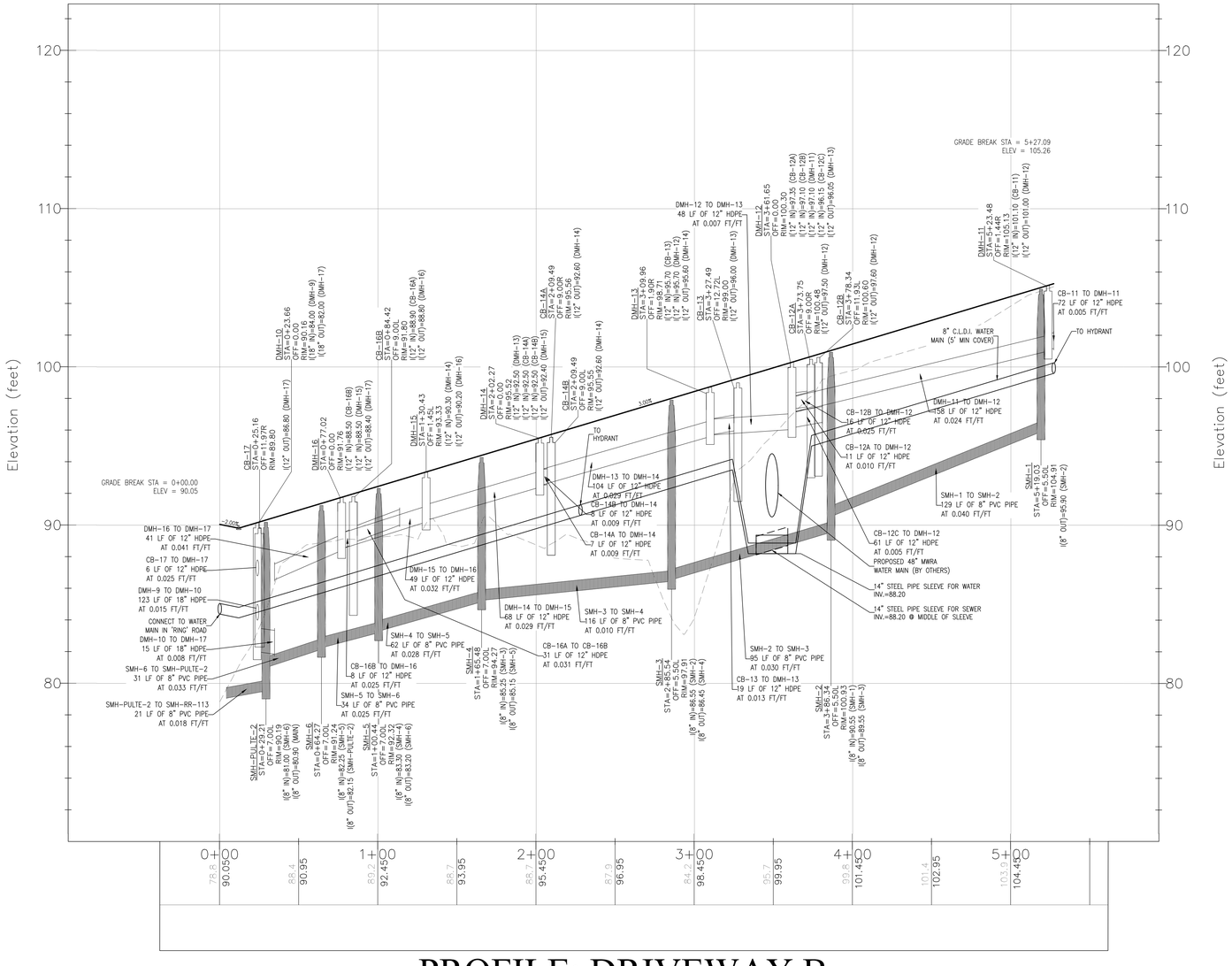

PROFILE: DRIVEWAY B

STA 0+00 THROUGH 5+27.09

HORIZONTAL SCALE: 1" = 40', VERTICAL SCALE: 1" = 4'

NOT FOR CONSTRUCTION

CDG PROJECT #: 19024

REVISIONS:

REV	DATE	COMMENT
1		
2		
3		
4		
5		
6		
7		
8		
9		
10		

CITY COUNCIL:

SEAL:

COMMONWEALTH OF MASSACHUSETTS
MATTHEW A. LEIDNER
CIVIL
No. 45641
REGISTERED PROFESSIONAL ENGINEER

MATTHEW A. LEIDNER, P.E.

PREPARED BY:

CIVIL DESIGN GROUP, LLC
21 HIGH STREET, SUITE 207
NORTH ANDOVER, MA 01845
www.cdgengineering.com
p: 978-794-5400 f: 978-965-3971

PREPARED FOR:

PULTE HOMES
115 FLANDERS ROAD
SUITE 200
WESTBOROUGH, MA 01581
www.pulte.com

PROJECT:

HIGHLAND AT VALE

THE VALE
WOBURN, MASSACHUSETTS

SCALE:

40 0 20 40 80
GRAPHIC SCALE IN FEET

SHEET:

PLAN & PROFILE

14

DATE: 04/30/2020

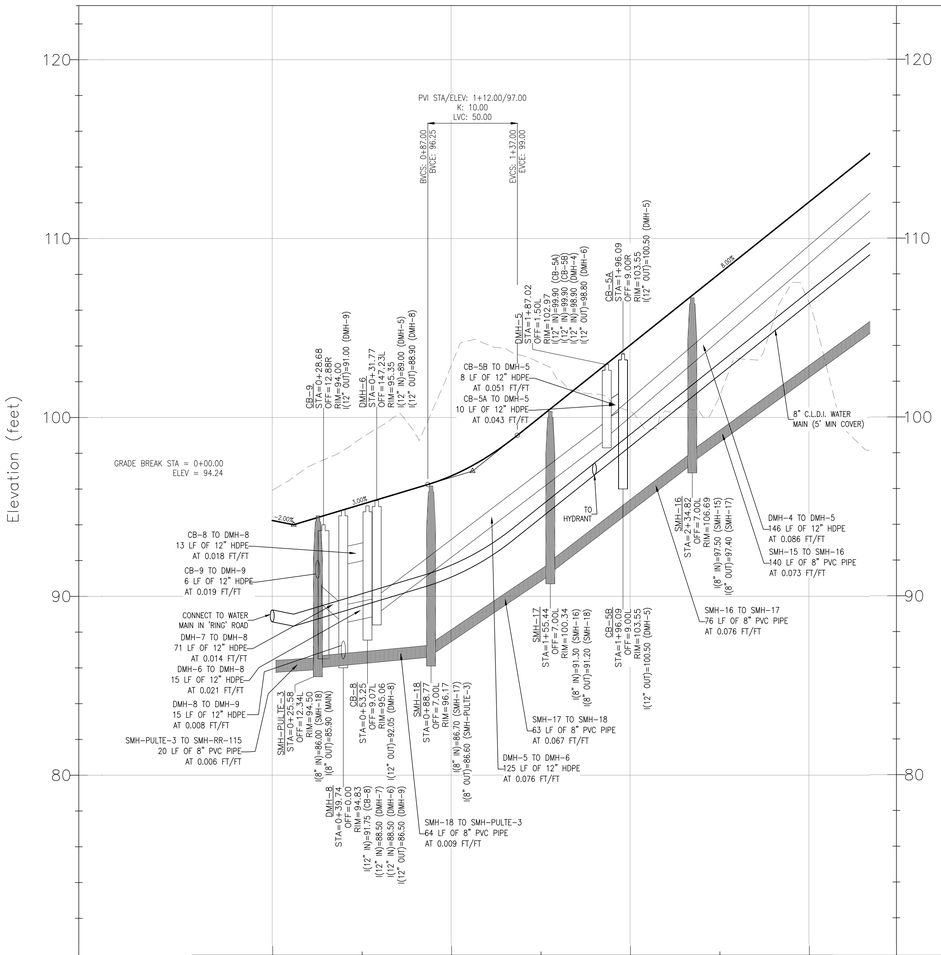

PROFILE: DRIVEWAY C
STA 0+00 THROUGH 3+00

HORIZONTAL SCALE: 1" = 40', VERTICAL SCALE: 1" = 4'

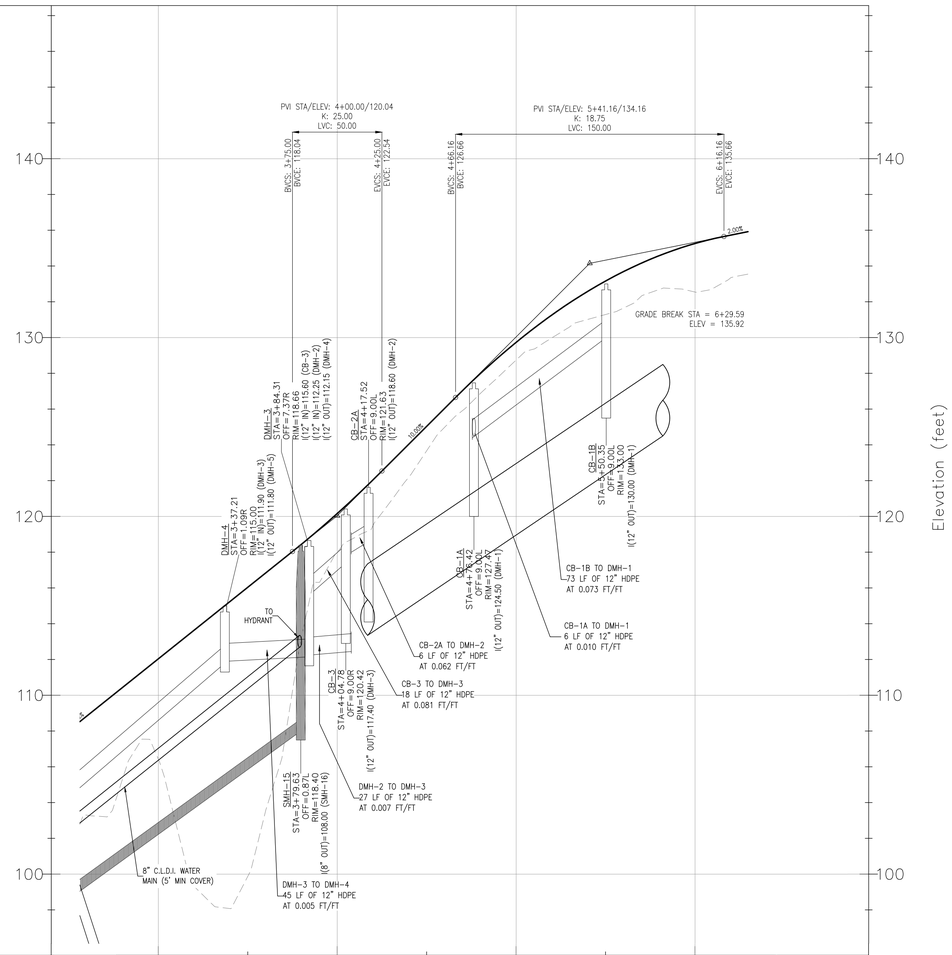

PROFILE: DRIVEWAY C
STA 3+00 THROUGH 6+29.59

HORIZONTAL SCALE: 1" = 40', VERTICAL SCALE: 1" = 4'

NOT FOR CONSTRUCTION

CDG PROJECT #: 19024

REVISIONS:

REV	DATE	COMMENT
1		
2		
3		
4		
5		
6		
7		
8		
9		
10		

CITY COUNCIL:

SEAL:

COMMONWEALTH OF MASSACHUSETTS
MATTHEW A. LEIDNER
CIVIL
No. 45641
REGISTERED PROFESSIONAL ENGINEER

MATTHEW A. LEIDNER, P.E.

PREPARED BY:

CIVIL DESIGN GROUP, LLC
21 HIGH STREET, SUITE 207
NORTH ANDOVER, MA 01845
www.cdgengineering.com
p: 978-794-5400 f: 978-965-3971

PREPARED FOR:

Pulte HOMES
115 FLANDERS ROAD
SUITE 200
WESTBOROUGH, MA 01581
www.pulte.com

PROJECT:

HIGHLAND AT VALE

THE VALE
WOBURN, MASSACHUSETTS

SCALE:

40 0 20 40 80

GRAPHIC SCALE IN FEET

SHEET:

PLAN & PROFILE

15

DATE: 04/30/2020

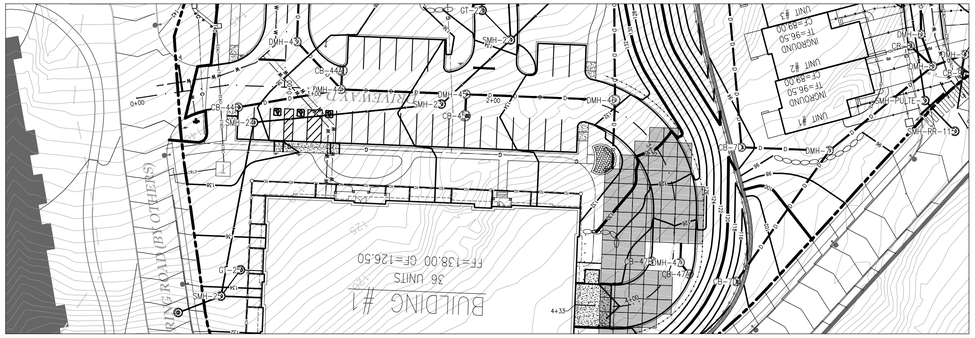

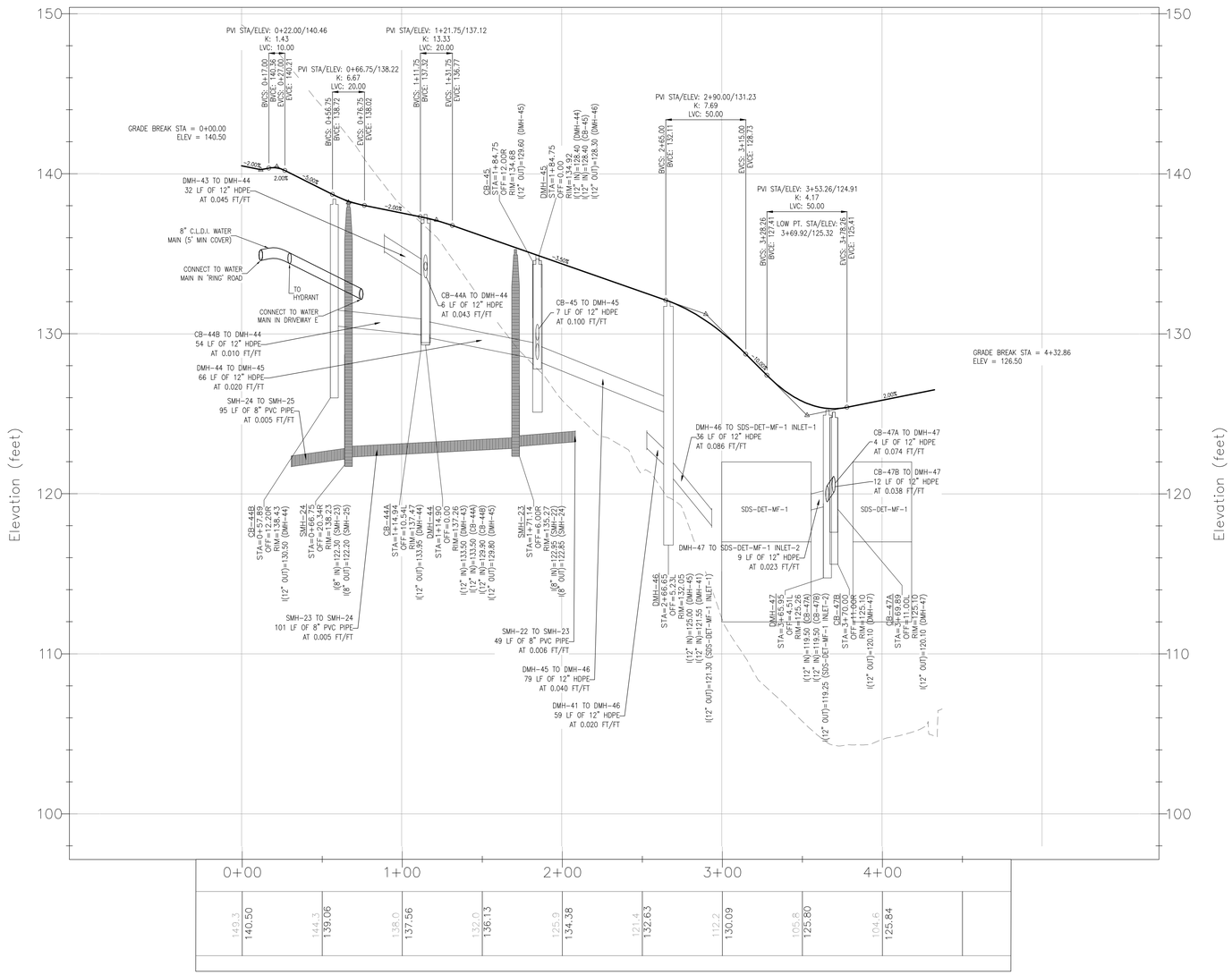

PROFILE: DRIVEWAY D
STA 0+00 THROUGH 4+32.86

HORIZONTAL SCALE: 1" = 40', VERTICAL SCALE: 1" = 4'

NOT FOR CONSTRUCTION

CDG PROJECT #: 19024

REVISIONS:

REV	DATE	COMMENT
1		
2		
3		
4		
5		
6		
7		
8		
9		
10		

CITY COUNCIL:

SEAL:

COMMONWEALTH OF MASSACHUSETTS
MATTHEW A. LEIDNER
CIVIL
No. 45641
REGISTERED PROFESSIONAL ENGINEER

MATTHEW A. LEIDNER, P.E.

PREPARED BY:

CIVIL DESIGN GROUP, LLC

21 HIGH STREET, SUITE 207
NORTH ANDOVER, MA 01845
www.cdgengineering.com
p: 978-794-5400 f: 978-965-3971

PREPARED FOR:

Pulte HOMES

115 FLANDERS ROAD
SUITE 200
WESTBOROUGH, MA 01581
www.pulte.com

PROJECT:

HIGHLAND AT VALE

THE VALE
WOBURN, MASSACHUSETTS

SCALE:

40 0 20 40 80

GRAPHIC SCALE IN FEET

SHEET:

PLAN & PROFILE

16

DATE: 04/30/2020

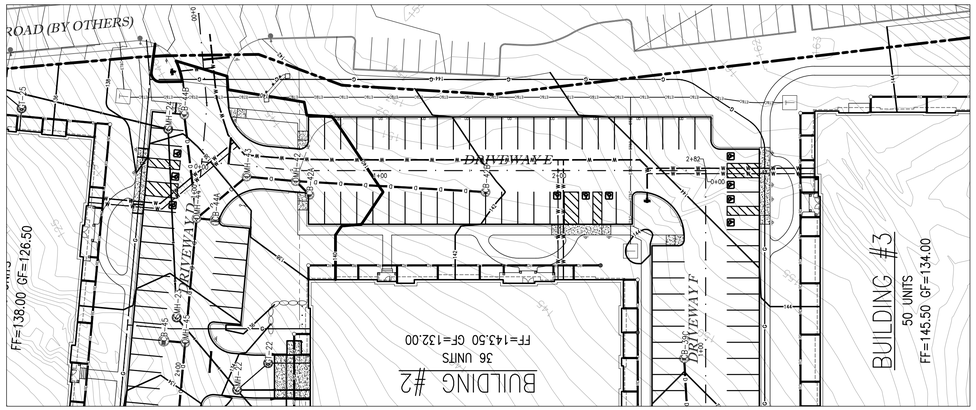

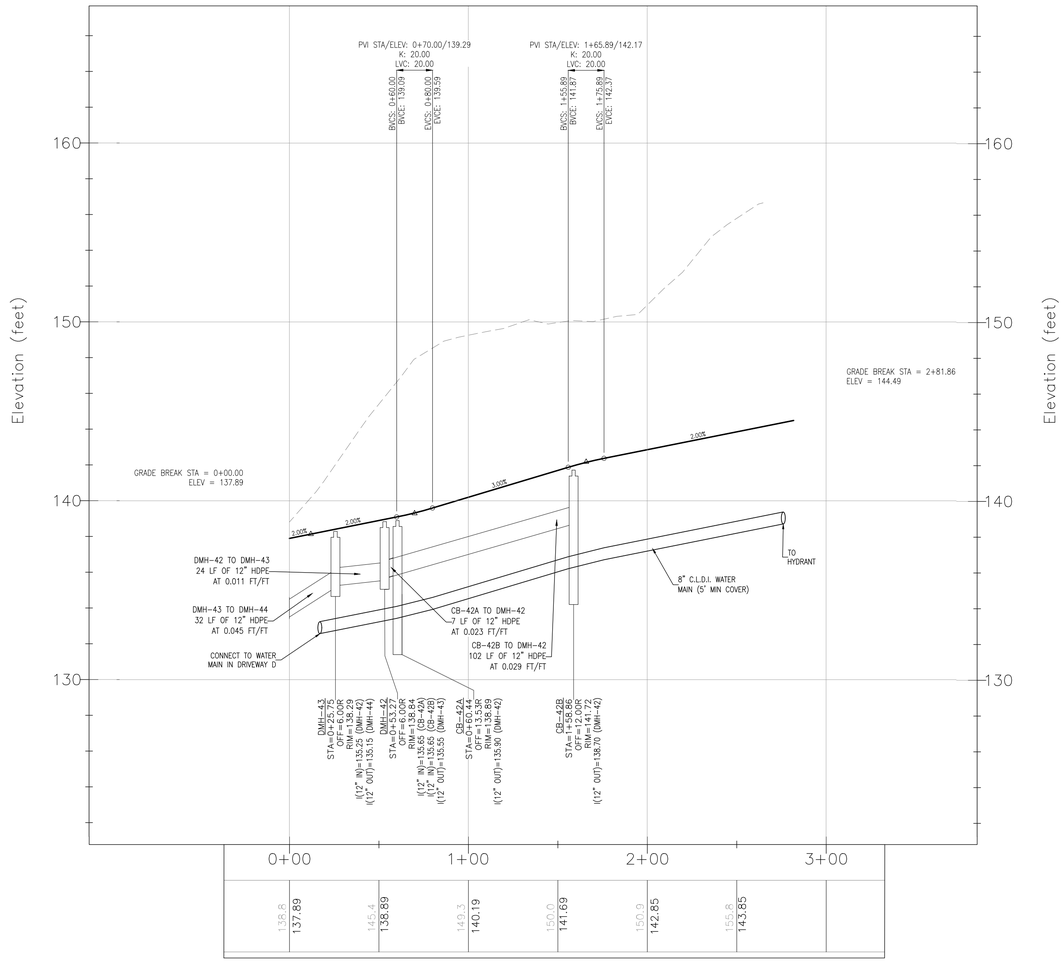

PROFILE: DRIVEWAY E
STA 0+00 THROUGH 2+81.86

HORIZONTAL SCALE: 1" = 40', VERTICAL SCALE: 1" = 4'

NOT FOR CONSTRUCTION

CDG PROJECT #: 19024

REVISIONS:

REV	DATE	COMMENT
1		
2		
3		
4		
5		
6		
7		
8		
9		
10		

CITY COUNCIL:

SEAL:

COMMONWEALTH OF MASSACHUSETTS
MATTHEW A. LEIDNER
CIVIL
No. 45641
REGISTERED PROFESSIONAL ENGINEER

MATTHEW A. LEIDNER, P.E.

PREPARED BY:

CIVIL DESIGN GROUP, LLC
21 HIGH STREET, SUITE 207
NORTH ANDOVER, MA 01845
www.cdgengineering.com
p: 978-794-5400 f: 978-965-3971

PREPARED FOR:

PULTE HOMES
115 FLANDERS ROAD
SUITE 200
WESTBOROUGH, MA 01581
www.pulte.com

PROJECT:

HIGHLAND AT VALE

THE VALE
WOBURN, MASSACHUSETTS

SCALE:
40 0 20 40 80
GRAPHIC SCALE IN FEET

SHEET:

PLAN & PROFILE

17

DATE: 04/30/2020

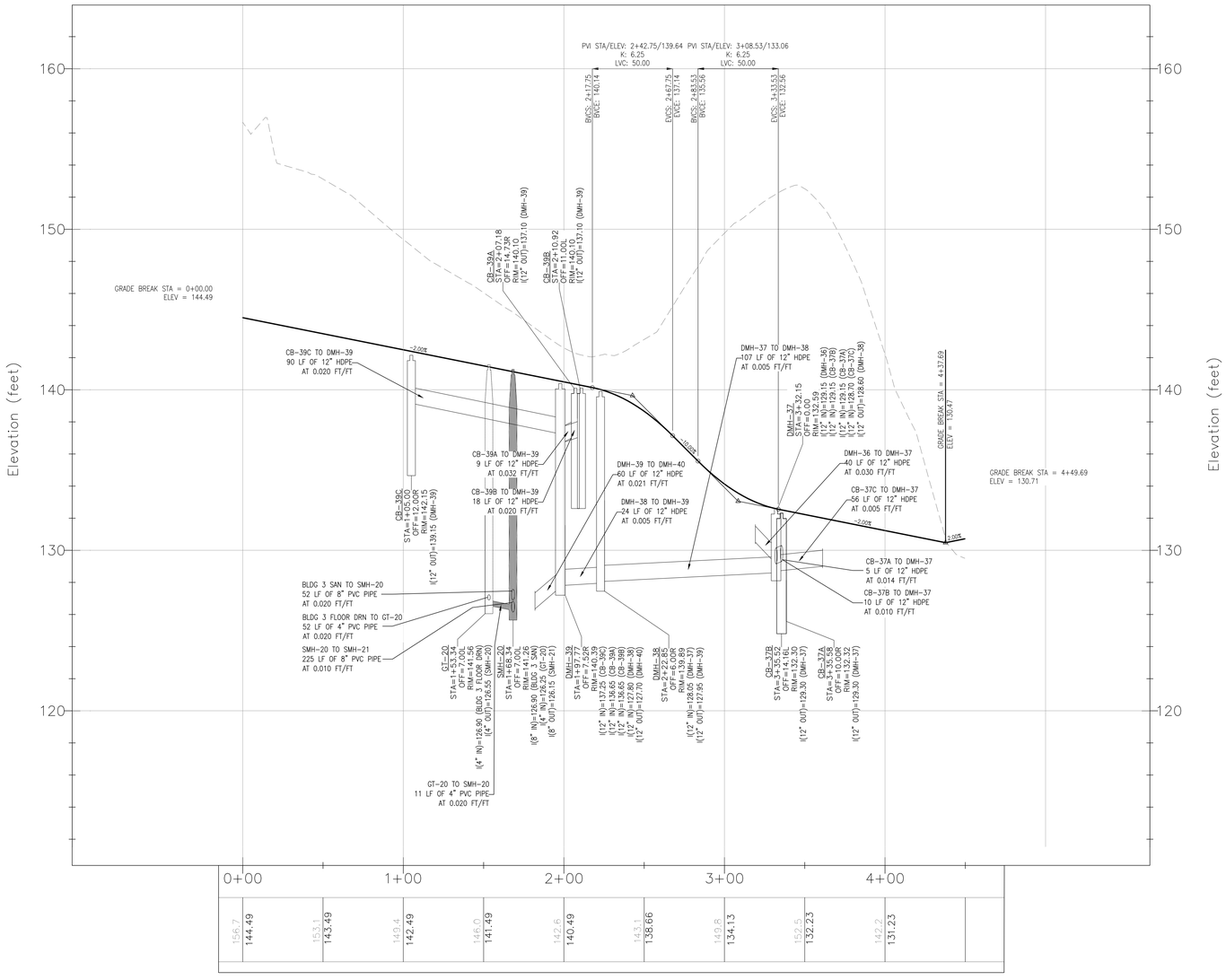

PROFILE: DRIVEWAY F
STA 0+00 THROUGH 4+49.69

HORIZONTAL SCALE: 1" = 40', VERTICAL SCALE: 1" = 4'

NOT FOR CONSTRUCTION

CDG PROJECT #: 19024

REVISIONS:

REV	DATE	COMMENT
1		
2		
3		
4		
5		
6		
7		
8		
9		
10		

CITY COUNCIL:

SEAL:

COMMONWEALTH OF MASSACHUSETTS
MATTHEW A. LEIDNER
CIVIL
No. 45641
REGISTERED PROFESSIONAL ENGINEER

MATTHEW A. LEIDNER, P.E.

PREPARED BY:

CIVIL DESIGN GROUP, LLC

21 HIGH STREET, SUITE 207
NORTH ANDOVER, MA 01845
www.cdgengineering.com
p: 978-794-5400 f: 978-965-3971

PREPARED FOR:

PULTE HOMES

115 FLANDERS ROAD
SUITE 200
WESTBOROUGH, MA 01581
www.pulte.com

PROJECT:

HIGHLAND AT VALE

THE VALE
WOBURN, MASSACHUSETTS

SCALE:

40 0 20 40 80

GRAPHIC SCALE IN FEET

SHEET:

PLAN & PROFILE

18

DATE: 04/30/2020

LUMINAIRE

D720 SERIES LED LUMINAIRE

LL12 & L13

Description
The D720 Series is a luminaire that features a clear acrylic lens surrounded by a decorative cage with a choice of cast aluminum finiers.

LED Luminaire
Multiple LED systems available with convection cooled driver, options for intensity, distribution and color. They operate with over voltage and short circuit protection and automatic voltage sensing for 120 to 277v input. (See next page for LED-available)
- 50,000+ hours of operational life
- Warm 3000K, neutral 4000K, or cool white 5000K color
- Dimmable (controlled by others)
- Suitable for wet locations

Installation
The luminaire will mount to a 3" O.D post or tenon with 6x1/8" black oxide coated stainless steel set screws to ensure a solid connection. The diffuser will be held to the fitter by (8) 8-1/0" black oxide coated stainless steel captive set screws.

Lens
Clear Acrylic

Finish
Premium quality thermoset polyester powdercoat for a durable finish in the following:

Standard:
- **BLK** - Satin Black
- **CLB** - Classic Bronze
- **GRN** - Green
- **TBK** - Textured Black

Premium:
- **ATC** - Antique Copper
- **GPG** - Granite Green
- **WHT** - White

D720
LED

PROJECT:
HIGHLAND AT VALE
WOBURN, MA

Ordering Information:

Model	LED System	Light Distribution	Order Code	Finish	Option
D721 D722 D723 D724 D725 D726 D727 D728 D729	AVI LSK VLE DBM	AS SY T2 (Type II) T3 (Type III) T4 (Type IV) T5 (Type V)	3K,4K 5K,3L 4L,5L 3VL,4VL,5VL 3L,4L,5L 3K,4K,5K	ATC BLK CLB GRN GPG TBK WHT	PCL-EL

See next page for more complete LED ordering options

Electrostatic sensitive device. Observe precautions for handling

10 year limited warranty

Part String

Example: D721/ASR-SY-3K/BLK

800.364.3096 • Fax 281.997.0440 • www.amerlusexterior.com

Amerlux reserves the right to change details that do not affect overall function and performance.

amerlux

BOLLARD LIGHT

DB6 SERIES

LL12 & L13

Materials
The bollard is extruded aluminum with a .125 wall thickness. All hardware is stainless steel, and exterior hardware is tamper resistant.

Electrical
The easily accessible ballast is a High Power Factor (HPF), core and coil type, pre-wired and tested. The glazed white porcelain socket will be medium or base, 4KV pulse rated with a copper alloy nickel plated screw shell and center contact. All components are UL recognized and will be an integral part of the luminaire. The luminaire will carry an ETL label "Suitable for wet location."

Installation
The one piece construction of the DB6 Series includes an anchor plate which mounts with (4) 3/8" x 12" galvanized steel anchor bolts. Conduit may enter at the center of the anchor plate prior to the installation of the base cover. The bollard casing is removeable for relamping.

Finish
Premium quality thermoset polyester powdercoat for a durable finish in the following:

Standard:
- **BLK** - Satin Black
- **CLB** - Classic Bronze
- **GRN** - Green
- **TBK** - Textured Black

Premium:
- **ATC** - Antique Copper
- **GPG** - Granite Green
- **WHT** - White

Light Control Options

Indirect
(L3 is the standard optical system unless otherwise specified). The light source will be hidden in the base of the fixture and will cause the fixture to be entirely lit up of the overall aluminum reflector visible through the clear lens.

Louvered (LV)
The louvered light source directs the light downward and shields it from direct view.

Refractor (LR)
A borosilicate glass refractor delivers IES Type V distribution and directs the light to project farther than the other two systems.

Model	Optical System	Light Source	Voltage	Finish
DB6RT-55 DB6RT-55	L3 L3 LVR	50MH 70MH 35HPS 50HPS 70HPS PL-13 CFL 26, 32, or 42	120v 208v 240v 277v	ATC BLK CLB GRN GPG TBK WHT

See next page for more complete ordering options

Amerlux reserves the right to change details that do not affect overall function and performance.

www.amerluxexterior.com • 5050 Shoreline Blvd. Pearland, Texas 77581 • (T) 281 997.5400 • (F)281-997-0440

DB6

HIGHLAND AT VALE
WOBURN, MA

Part String

Example: DB6RT-55/L3/50MH/120v/BLK

MAILBOX LIGHT

LEDLIGHTING SOLUTIONS

15W SOLAR POWERED LED STREET LIGHT (PRO SERIES)

- LED Lighting Solutions' 15W Solar Powered LED Street Light is a part of the Pro street lighting series.
- Our 15W Solar LED Street Light emits great lighting and is easy to set up and easy to use
- Built with ABS, PC, aluminum and anti-UV housing, this light is lightweight and stealth in appearance. The 15W LED for this product is equivalent to 1600 lumens and is completely self-sustaining and reduces approximately 50% energy cost.

PRODUCT APPLICATIONS

LED Lighting Solutions' 15W Solar Powered LED Street Light (Pro Series) is a great solution for outdoor lighting needs and boasts a lifespan of upwards to 20years.

LED LIGHTING SOLUTIONS | 26990 TECHNOLOGY DRIVE, SUITE 15 | MURIETA | CALIFORNIA | 92563 | 888-925-1998

LUMINAIRE AND BOLLARD LIGHT SCHEDULE							CALCULATION SUMMARY						
	SYMBOL	QTY	LABEL	ARRANGEMENT	LUMINAIRE LUMENS	LLF	LABEL	CALCTYPE	UNITS	AVG	MAX	MIN	AVG/MIN	MAX/MIN
LUMINAIRE		18	D72x/CA/AVI-SY-4L	SINGLE	3473	0.900	CALCPTS	ILLUMINANCE	Fc	1.11	5.8	0.0	N.A.	N.A.
BOLLARD LIGHT		3	DB6											
MAILBOX LIGHT		3	SGDW015-PRO-BK											

NOTES:
1. PHOTOMETRICS PROVIDED BY AMERLUX.
2. STREET LIGHTS SHALL BE AMERLUX MODEL D721, SMOOTH SATIN BLACK, WITH LED LIGHT SOURCE AND OPTIONAL DECORATIVE CHIMNEY (OPTION "CHM"). POLES SHALL BE 12' ALUMINUM DIRECT BURY. AMERLUX PART STRING D53-12/FDBE/D721/AVI-AS-(SY)-4L/BLK/PCL OR APPROVED EQUAL. STREET LIGHTS AND MAILBOX LIGHTS SHALL BE ON PHOTOCELL (ACCESSORY "PCL").
3. INSTALL A 120v OUTLET AT THE RECYCLING AREA.
4. BOLLARD LIGHTS SHALL BE AMERLUX MODEL DB6RRT WITH ROUNDED TOPS.
5. MAILBOX LIGHT POLE: 14 FOOT ROUND ALUMINUM, 3 INCH DIAMETER, ANCHOR BASE, W/OPTIONAL BASE COVER. POWDER COAT BLACK. MODEL NUMBER QS3ALAB BY ENERGY LIGHT, INC.
6. SITE LIGHTING INSTALLATION CONTRACTOR SHALL BE RESPONSIBLE FOR RUNNING THE WIRING INTO THE NEAREST BUILDING OR DESIGNATED METER LOCATION.

NOT FOR CONSTRUCTION

CDG PROJECT #: 19024

REVISIONS:

REV	DATE	COMMENT
1		
2		
3		
4		
5		
6		
7		
8		
9		
10		

CITY COUNCIL:

SEAL:

COMMONWEALTH OF MASSACHUSETTS
MATTHEW A. LEIDNER
CIVIL
No. 45641
REGISTERED PROFESSIONAL ENGINEER

MATTHEW A. LEIDNER, P.E.

PREPARED BY:

CIVIL DESIGN GROUP, LLC

21 HIGH STREET, SUITE 207
NORTH ANDOVER, MA 01845
www.cdgengineering.com
p: 978-794-5400 f: 978-965-3971

PREPARED FOR:

Pulte HOMES

115 FLANDERS ROAD
SUITE 200
WESTBOROUGH, MA 01581
www.pulte.com

PROJECT:

HIGHLAND AT VALE

THE VALE
WOBURN, MASSACHUSETTS

SCALE:
50 0 25 50 100
GRAPHIC SCALE IN FEET

SHEET:

PHOTOMETRIC PLAN

19

DATE: 04/30/2020

NOT FOR CONSTRUCTION

CDG PROJECT #: 19024

REVISIONS:

REV	DATE	COMMENT
1		
2		
3		
4		
5		
6		
7		
8		
9		
10		

CITY COUNCIL:

SEAL:

COMMONWEALTH OF MASSACHUSETTS
MATTHEW A. LEIDNER
CIVIL
No. 45641
REGISTERED PROFESSIONAL ENGINEER

MATTHEW A. LEIDNER, P.E.

PREPARED BY:

CIVIL DESIGN GROUP, LLC
21 HIGH STREET, SUITE 207
NORTH ANDOVER, MA 01845
www.cdgengineering.com
p: 978-794-5400 f: 978-965-3971

PREPARED FOR:

PULTE HOMES
115 FLANDERS ROAD
SUITE 200
WESTBOROUGH, MA 01581
www.pulte.com

PROJECT:

HIGHLAND AT VALE

THE VALE
WOBURN, MASSACHUSETTS

SCALE:

50 0 25 50 100
GRAPHIC SCALE IN FEET

SHEET:

PERMISSIBLE BUILDING AREA PLAN

20

DATE: 04/30/2020

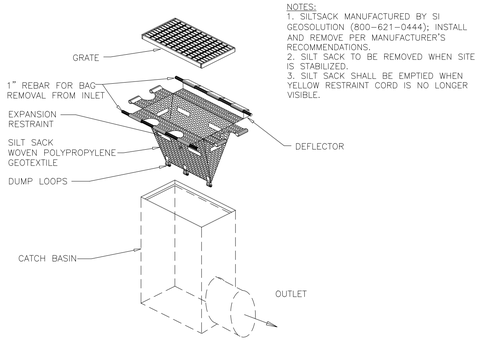

NOTES:
1. SILTSACK MANUFACTURED BY SI GEOSOLUTION (800-621-0444); INSTALL AND REMOVE PER MANUFACTURER'S RECOMMENDATIONS.
2. SILT SACK TO BE REMOVED WHEN SITE IS STABILIZED.
3. SILT SACK SHALL BE EMPTIED WHEN YELLOW RESTRAINT CORD IS NO LONGER VISIBLE.

TYPICAL SILT SACK DETAIL

NOT TO SCALE

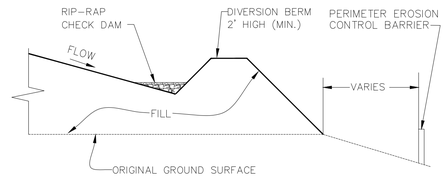

NOTES:

1. CHECK DAMS SHALL BE PROVIDED IN ALL UNSTABILIZED CHANNELS, SWALES AND ALONG DIVERSION BERMS AS NEEDED.

2. CHECK DAMS SHALL BE CLEANED OUT OF ALL DEBRIS AND SEDIMENT AS NEEDED.

3. ALL SEDIMENTATION BASIN BERMS SHALL BE 4' MIN. IN HEIGHT.

TYPICAL DIVERSION BERM DETAIL

NOT TO SCALE

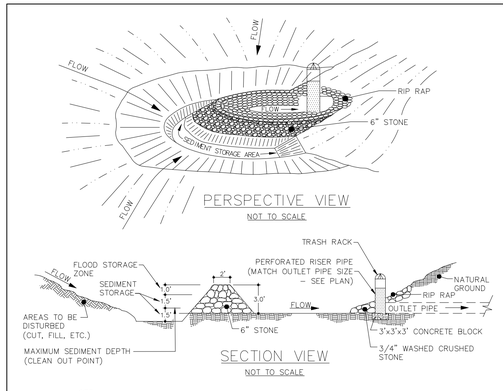

NOTE:
THIS DETAIL IS PROVIDED FOR GENERAL REPRESENTATION PURPOSES ONLY. TEMPORARY SEDIMENTATION BASINS SHALL BE SIZED IN ACCORDANCE WITH NPDES REQUIREMENTS.

TYPICAL TEMPORARY SEDIMENT BASIN WITH RISER PIPE DETAIL

NOT TO SCALE

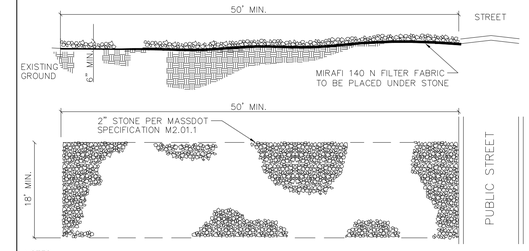

NOTES:
1. A STABILIZED CONSTRUCTION ENTRANCE COMPRISED OF 2"-3" CRUSHED STONE SHALL BE LOCATED WHERE CONSTRUCTION RELATED VEHICLES WILL ACCESS THE CONSTRUCTION SITE ONTO A PUBLIC STREET.
2. THE ENTRANCE SHALL BE MAINTAINED IN A CONDITION WHICH WILL PREVENT TRACKING OR FLOWING OF SEDIMENT ONTO PUBLIC STREETS OR ADJACENT LAND. ADDITIONAL STONE SHALL BE ADDED AS CONDITIONS WARRANT.
3. ANY SEDIMENT SPILLED, DROPPED, WASHED OR TRACKED ONTO PUBLIC STREETS SHALL BE REMOVED IMMEDIATELY.
4. WHEELS SHALL BE CLEANED TO REMOVE SEDIMENT PRIOR TO ENTERING A PUBLIC STREET, IF APPLICABLE. WHEEL WASHING SHALL BE DONE IN AN AREA STABILIZED WITH CRUSHED STONE THAT DRAINS TO A DESIGNATED SEDIMENT TRAP.

TYPICAL STABILIZED CONSTRUCTION ENTRANCE DETAIL

NOT TO SCALE

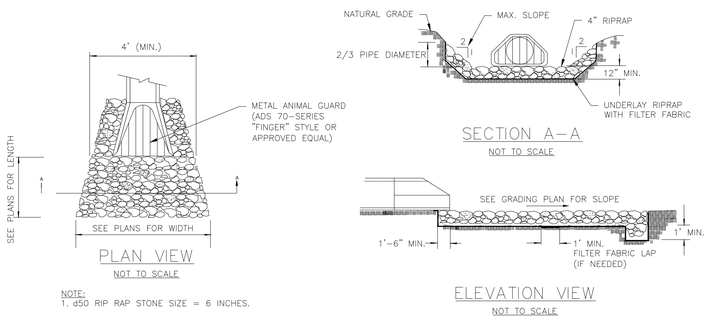

NOTE:
1. d50 RIP RAP STONE SIZE = 6 INCHES.

NOTES:
1. RIPRAP SHOULD EXTEND UP BOTH SIDES OF THE APRON AND AROUND THE END OF THE PIPE OR CULVERT AT THE DISCHARGE OUTLET AT A MAXIMUM SLOPE OF 2:1 AND A HEIGHT NOT LESS THAN TWO THIRDS THE PIPE DIAMETER OR CULVERT HEIGHT.
2. THE AREA TO BE RIPRAPPED SHALL BE UNDERCUT SO THAT THE INVERT OF THE APRON SHALL BE AT THE SAME GRADE (FLUSH) WITH THE SURFACE OF THE RECEIVING CHANNEL.
3. ALL SUBGRADE FOR STRUCTURE TO BE COMPACTED TO 95% OR GREATER.
4. THE PLACING OF FILL, EITHER LOOSE OR COMPACTED IN THE RECEIVING CHANNEL SHALL NOT BE ALLOWED.
5. FILTER FABRIC SHALL BE INSTALLED ON COMPACTED SUBGRADE PRIOR TO PLACEMENT OF RIP RAP.
6. ANY DISTURBED AREA FROM END OF APRON TO RECEIVING CHANNEL MUST BE STABILIZED.

RIP-RAP APRON DETAIL

NOT TO SCALE

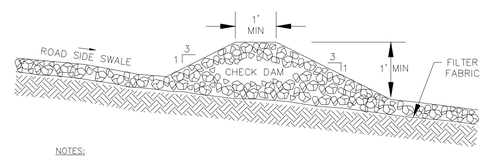

NOTES:

CHECK DAM STONES SHALL BE ANGULAR AND WELL GRADED:
- MINIMUM STONE SIZE IS 2" DIAMETER
- MAXIMUM STONE SIZE IS 3" DIAMETER

RIP-RAP CHECK DETAIL

NOT TO SCALE

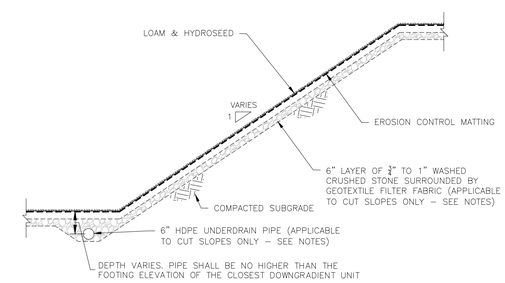

NOTES:
1. THIS DETAIL APPLIES TO ALL SLOPES 3H:1V AND STEEPER.
2. STONE LAYER AND ASSOCIATED UNDERDRAIN ONLY APPLY WHERE SLOPE IS IN A CUT (NOT APPLICABLE TO FILL SLOPES).

TYPICAL SLOPE STABILIZATION DETAIL

NOT TO SCALE

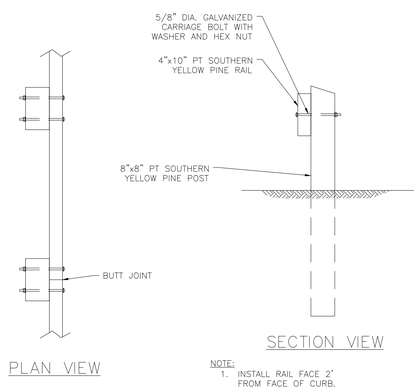

NOTE:
1. INSTALL RAIL FACE 2' FROM FACE OF CURB.

WOODEN GUIDE RAIL DETAIL

NOT TO SCALE

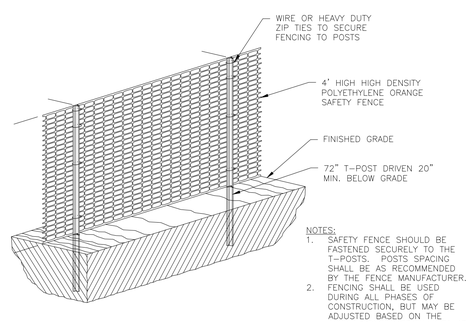

NOTES:
1. SAFETY FENCE SHOULD BE FASTENED SECURELY TO THE T-POSTS. POSTS SPACING SHALL BE AS RECOMMENDED BY THE FENCE MANUFACTURER.
2. FENCING SHALL BE USED DURING ALL PHASES OF CONSTRUCTION, BUT MAY BE ADJUSTED BASED ON THE ACTIVE CONSTRUCTION AREA AT ANY GIVEN TIME.

TEMPORARY CONSTRUCTION DELINEATION FENCING DETAIL

NOT TO SCALE

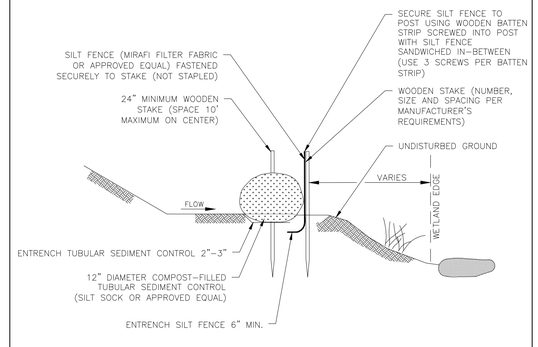

TYPICAL EROSION CONTROL BARRIER DETAIL

NOT TO SCALE

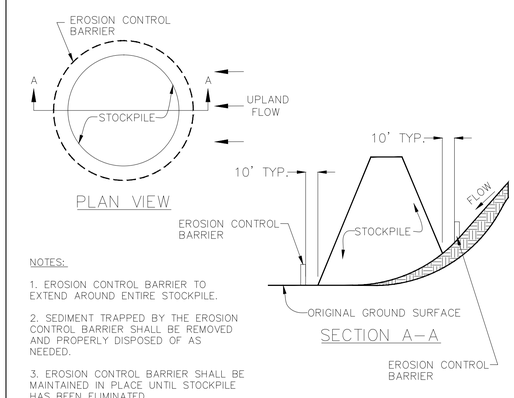

NOTES:

1. EROSION CONTROL BARRIER TO EXTEND AROUND ENTIRE STOCKPILE.

2. SEDIMENT TRAPPED BY THE EROSION CONTROL BARRIER SHALL BE REMOVED AND PROPERLY DISPOSED OF AS NEEDED.

3. EROSION CONTROL BARRIER SHALL BE MAINTAINED IN PLACE UNTIL STOCKPILE HAS BEEN ELIMINATED.

TYPICAL TEMPORARY STOCKPILE DETAIL

NOT TO SCALE

NOT FOR CONSTRUCTION

CDG PROJECT #: 19024

REVISIONS:

REV	DATE	COMMENT
1		
2		
3		
4		
5		
6		
7		
8		
9		
10		

CITY COUNCIL:

SEAL:

COMMONWEALTH OF MASSACHUSETTS
MATTHEW A. LEIDNER
CIVIL
No. 45641
REGISTERED PROFESSIONAL ENGINEER

MATTHEW A. LEIDNER, P.E.

PREPARED BY:

CIVIL DESIGN GROUP, LLC

21 HIGH STREET, SUITE 207
NORTH ANDOVER, MA 01845
www.cdgengineering.com
p: 978-794-5400 f: 978-965-3971

PREPARED FOR:

PULTE HOMES

115 FLANDERS ROAD
SUITE 200
WESTBOROUGH, MA 01581
www.pulte.com

PROJECT:

HIGHLAND AT VALE

THE VALE
WOBURN, MASSACHUSETTS

SCALE:

AS-NOTED

SHEET:

CONSTRUCTION DETAILS

21

DATE: 04/30/2020

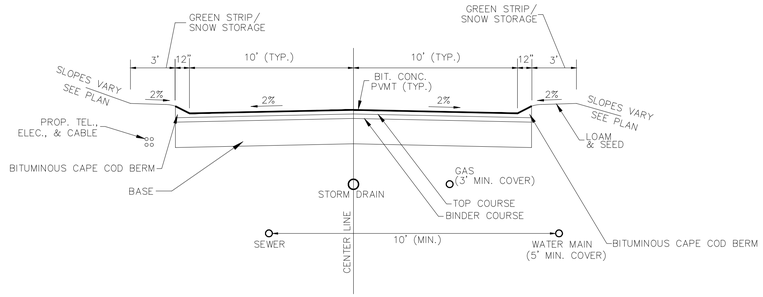

NOTES:
1. LOCATIONS OF UTILITIES SHOWN IN THIS DETAIL FOR REPRESENTATION PURPOSES ONLY. SEE SITE PLAN FOR PROPOSED LOCATIONS OF UTILITIES.
2. REFER TO TYPICAL PAVEMENT SECTION DETAIL FOR FURTHER INFORMATION ON PAVEMENT SYSTEM.

TYPICAL SITE DRIVE CROSS-SECTION (NO PARKING)

NOT TO SCALE

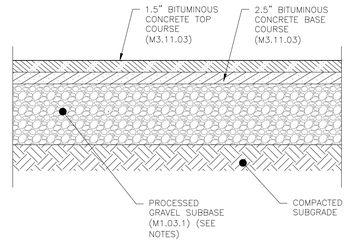

NOTES:
1. THIS DETAIL PROVIDES A MINIMUM STANDARD FOR PAVEMENT CONSTRUCTION BASED ON THE AASHTO GUIDE FOR DESIGN OF PAVEMENT STRUCTURES. THE FINAL PAVEMENT SECTION SHALL BE DESIGNED BY A GEOTECHNICAL ENGINEER AND SHALL BE UTILIZED IF MORE STRINGENT THAN THIS DETAIL.
2. MATERIALS AND CONSTRUCTION SHALL BE IN ACCORDANCE WITH THE MassDOT STANDARD SPECIFICATIONS FOR HIGHWAYS AND BRIDGES.
3. THE SOIL MUST HAVE A MOISTURE CONTENT DRY OF OPTIMUM AS DETERMINED BY THE MOISTURE–DENSITY RELATIONSHIP TEST METHOD ASTM D1557.
4. THE SOIL CAN BE COMPACTED TO 98% OF THE MAXIMUM STANDARD PROCTOR DENSITY AS DETERMINED BY THE MOISTURE–DENSITY RELATIONSHIP TEST METHOD ASTM D698.
5. THE SOIL SHALL NOT BE USED IF THE MATERIAL CONTAINS ORGANIC MATTER, RUBBLE, DEBRIS OR ANY OTHER DELETERIOUS MATERIAL.

TYPICAL BITUMINOUS PAVEMENT DETAIL

NOT TO SCALE

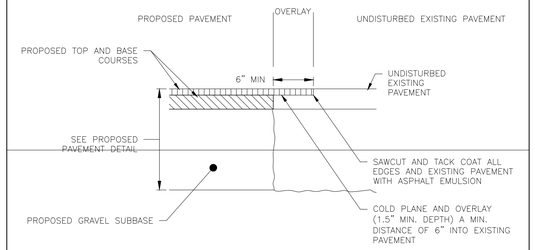

PAVEMENT TIE-IN DETAIL

NOT TO SCALE

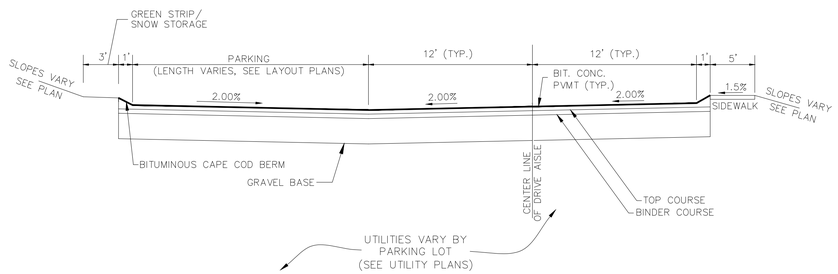

NOTES:
1. LOCATIONS OF UTILITIES SHOWN IN THIS DETAIL FOR REPRESENTATION PURPOSES ONLY. SEE SITE PLAN FOR PROPOSED LOCATIONS OF UTILITIES.
2. REFER TO TYPICAL PAVEMENT SECTION DETAIL FOR FURTHER INFORMATION ON PAVEMENT SYSTEM.

TYPICAL PARKING LOT CROSS-SECTION (PARKING ON ONE SIDE)

NOT TO SCALE

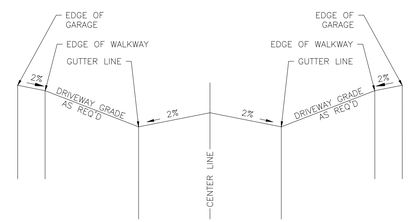

TYPICAL TOWNHOME DRIVEWAY DETAIL

NOT TO SCALE

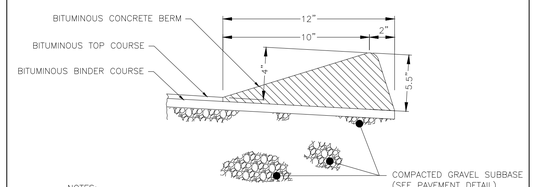

NOTES:
1. SEE NOTES SHEET AND LAYOUT PLAN FOR WHERE EACH CURB TYPE IS TO BE UTILIZED.
2. WHERE SIDEWALK DIRECTLY ABUTS THE BACK OF CURB, PROVIDE AN EXPANSION JOINT BETWEEN THE SIDEWALK AND CURB.

TYPICAL MONOLITHIC CAPE COD BERM DETAIL

NOT TO SCALE

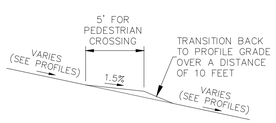

NOTES:
1. THIS DETAIL APPLIES WHERE PEDESTRIAN ROUTES ALONG SIDEWALKS OR CROSSWALKS CROSS SITE ROADWAYS, REGARDLESS OF WHETHER OR NOT A PAINTED CROSSWALK IS PROPOSED.
2. WHERE SITE DRIVE PROFILE GRADE IS LESS THAN 1.5%, THE CROSS SLOPE OF THE CROSSWALK SHALL MATCH THE ROAD GRADE (I.E. NO ADJUSTMENT NECESSARY).

ROADWAY ADJUSTMENT AT PEDESTRIAN CROSSING DETAIL

NOT TO SCALE

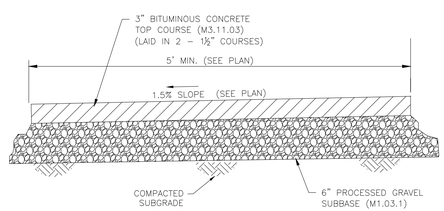

NOTES:
1. THIS DETAIL PROVIDES A MINIMUM STANDARD FOR SIDEWALK CONSTRUCTION. THE FINAL SIDEWALK SECTION SHALL BE DESIGNED BY A GEOTECHNICAL ENGINEER AND SHALL BE UTILIZED IF MORE STRINGENT THAN THIS DETAIL.
2. WHERE SIDEWALK DIRECTLY ABUTS THE BACK OF CURB, PROVIDE AN EXPANSION JOINT BETWEEN THE SIDEWALK AND CURB.
3. FLAT WORK WITHIN THE MUNICIPAL RIGHT OF WAY SHALL BE CONSTRUCTED IN CONFORMANCE WITH MUNICIPAL STANDARD SPECIFICATIONS.

TYPICAL ASPHALT SIDEWALK DETAIL

NOT TO SCALE

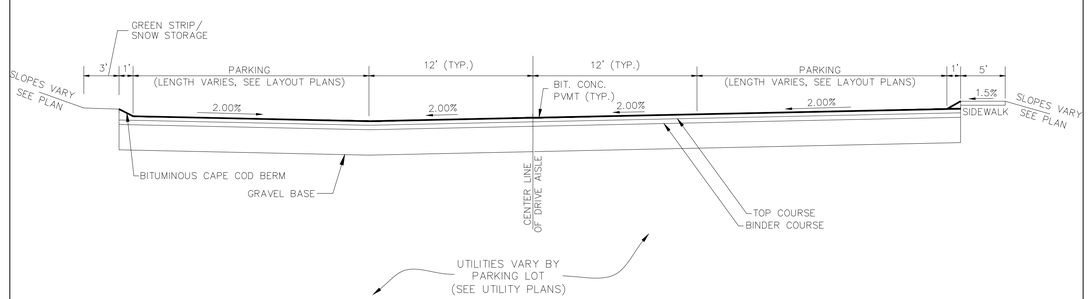

NOTES:
1. LOCATIONS OF UTILITIES SHOWN IN THIS DETAIL FOR REPRESENTATION PURPOSES ONLY. SEE SITE PLAN FOR PROPOSED LOCATIONS OF UTILITIES.
2. REFER TO TYPICAL PAVEMENT SECTION DETAIL FOR FURTHER INFORMATION ON PAVEMENT SYSTEM.

TYPICAL PARKING LOT CROSS-SECTION (PARKING ON BOTH SIDES)

NOT TO SCALE

NOT FOR CONSTRUCTION

CDG PROJECT #: 19024

REVISIONS:

REV	DATE	COMMENT
1		
2		
3		
4		
5		
6		
7		
8		
9		
10		

CITY COUNCIL:

SEAL:

COMMONWEALTH OF MASSACHUSETTS
MATTHEW A. LEIDNER
CIVIL
No. 45641
REGISTERED PROFESSIONAL ENGINEER

MATTHEW A. LEIDNER, P.E.

PREPARED BY:

CIVIL DESIGN GROUP, LLC
21 HIGH STREET, SUITE 207
NORTH ANDOVER, MA 01845
www.cdgengineering.com
p: 978-794-5400 f: 978-965-3971

PREPARED FOR:

PULTE HOMES
115 FLANDERS ROAD
SUITE 200
WESTBOROUGH, MA 01581
www.pulte.com

PROJECT:

HIGHLAND AT VALE

THE VALE
WOBURN, MASSACHUSETTS

SCALE:

AS-NOTED

SHEET:

CONSTRUCTION DETAILS

22

DATE: 04/30/2020

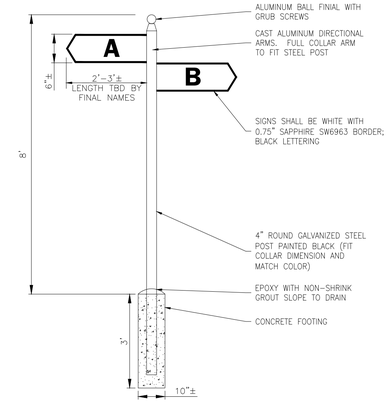

DRIVEWAY SIGN DETAIL

NOT TO SCALE

STOP SIGN DETAIL

NOT TO SCALE

EMERGENCY ACCESS ONLY SIGN

NOT TO SCALE

STOP SIGN NOTES:

1. SIGNS LOCATIONS ARE SHOWN ON THE LAYOUT PLAN.
2. STOP SIGNS SHALL BE MOUNTED ON A 4"x4" PRESSURE-TREATED POST WITH BLACK PVC WRAP AND MANSARD CAP, AND SHALL BE 48" FROM GROUND TO BOTTOM OF SIGN.
3. STOP SIGNS SHALL BE WHITE ON RED REFLECTIVE BACKGROUND.

EMERGENCY ACCESS SIGN NOTES:

1. PROVIDE ONE SIGN ON EACH SIDE OF THE EMERGENCY ACCESS GATE MOUNTED DIRECTLY TO THE GATE.
2. FONT – "ITCFRANKLIN", MEDIUM; DEMI.
3. COLORS – SIGN BACKGROUND SHALL BE SHERWIN WILLIAMS "NAVAL"; PMS540. LETTERING SHALL BE WHITE – VINYL CUT.
4. MATERIAL – $\frac{3}{4}$" PVC.

MISC. SIGN DETAILS

NOT TO SCALE

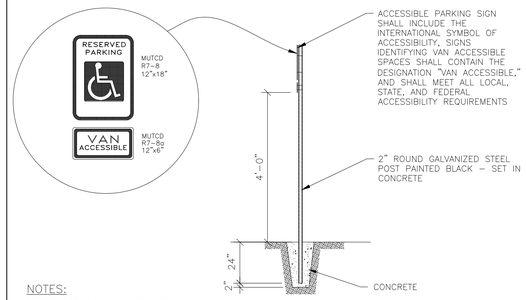

NOTES:

1. SIGNAGE SHALL COMPLY WITH APPLICABLE FEDERAL, STATE, & LOCAL CODES, REGULATIONS, & POLICIES.
2. VAN ACCESSIBLE SIGN SHALL BE USED ON ONE PARKING SPACE PER BUILDING, SUCH THAT THE STRIPED ACCESSIBLE AISLE IS ON THE PASSENGER SIDE OF THE VAN SPACE.

ACCESSIBLE PARKING SIGNAGE DETAIL

NOT TO SCALE

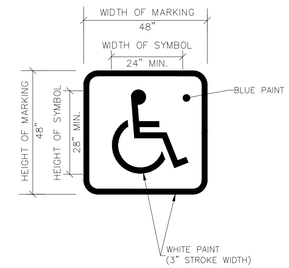

TYPICAL ACCESSIBLE PARKING SPACE MARKING DETAIL

NOT TO SCALE

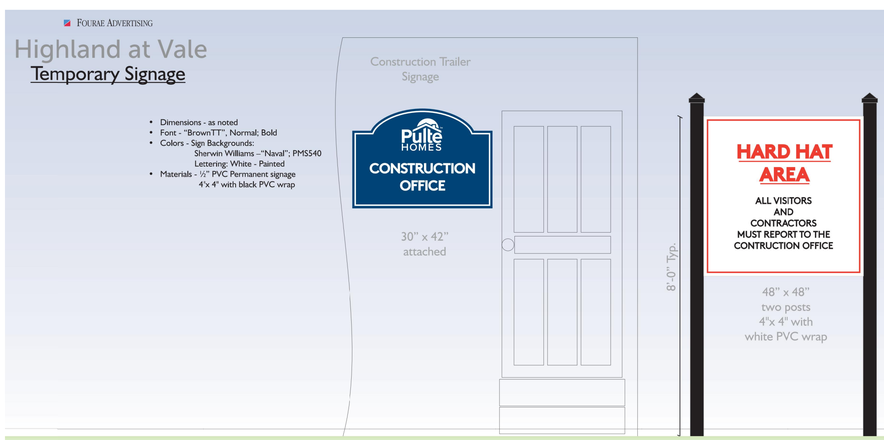

DETAILS FOR MISC. ON-SITE SIGNS INCLUDED IN CONTRACTOR SIGN PACKAGE

NOT TO SCALE

DETAILS FOR MISC. ON-SITE SIGNS NOT INCLUDED IN CONTRACTOR SIGN PACKAGE

NOT TO SCALE

NOT FOR CONSTRUCTION

CDG PROJECT #: 19024

REVISIONS:

REV	DATE	COMMENT
1		
2		
3		
4		
5		
6		
7		
8		
9		
10		

CITY COUNCIL:

SEAL:

COMMONWEALTH OF MASSACHUSETTS
MATTHEW A. LEIDNER
CIVIL
No. 45641
REGISTERED PROFESSIONAL ENGINEER

MATTHEW A. LEIDNER, P.E.

PREPARED BY:

CIVIL DESIGN GROUP, LLC

21 HIGH STREET, SUITE 207
NORTH ANDOVER, MA 01845
www.cdgengineering.com
p: 978-794-5400 f: 978-965-3971

PREPARED FOR:

Pulte HOMES

115 FLANDERS ROAD
SUITE 200
WESTBOROUGH, MA 01581
www.pulte.com

PROJECT:

HIGHLAND AT VALE

THE VALE
WOBURN, MASSACHUSETTS

SCALE:

AS-NOTED

SHEET:

CONSTRUCTION DETAILS

23

DATE: 04/30/2020

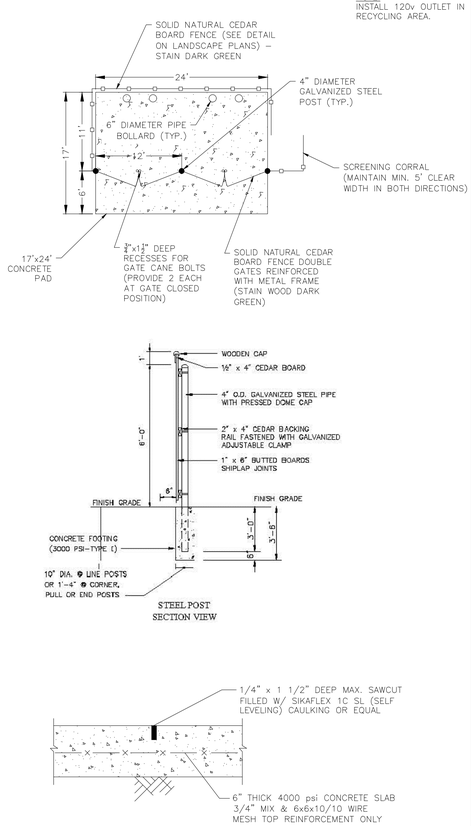

RECYCLING AREA DETAILS

NOT TO SCALE

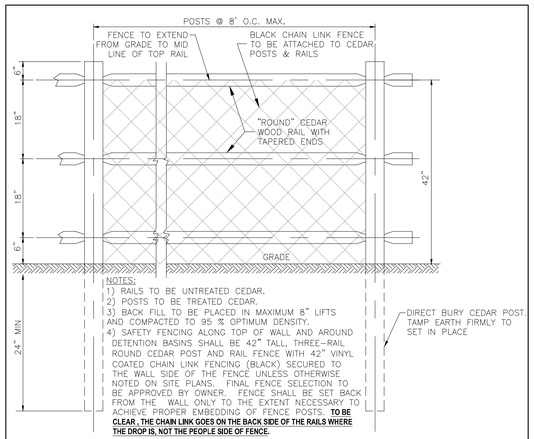

42" HIGH RAIL FENCE DETAIL

NOT TO SCALE

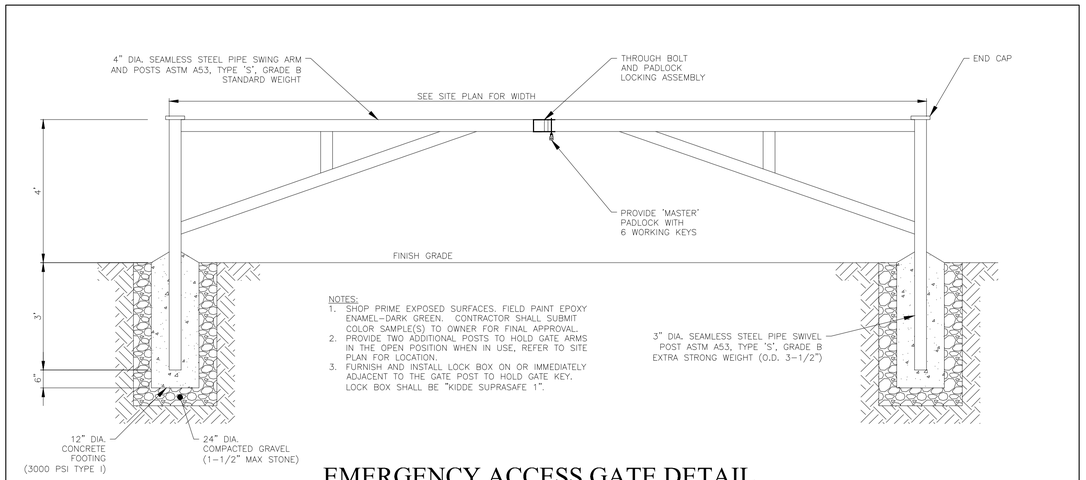

EMERGENCY ACCESS GATE DETAIL

NOT TO SCALE

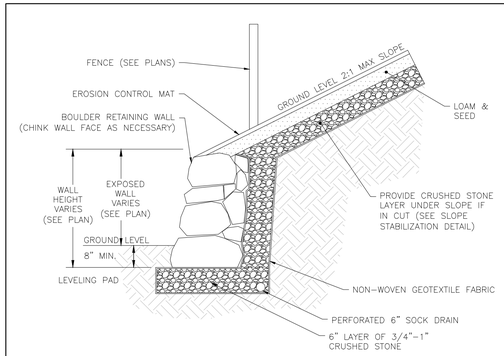

TYPICAL LANDSCAPE WALL DETAIL

NOT TO SCALE

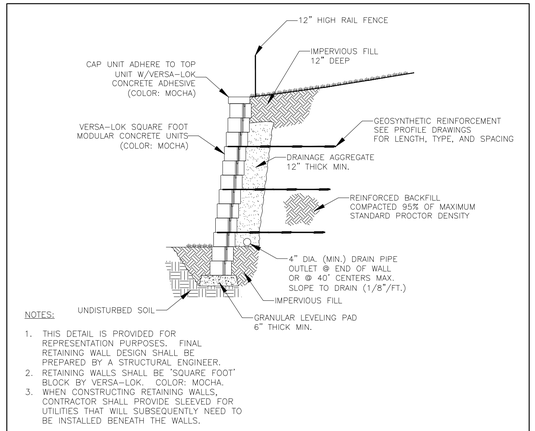

TYPICAL STRUCTURAL RETAINING WALL DETAIL

NOT TO SCALE

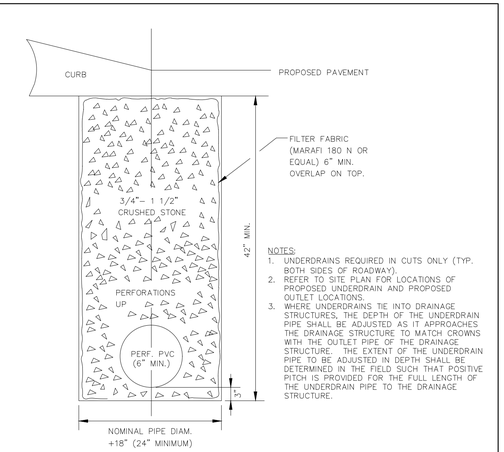

TYPICAL ROADWAY SUBDRAIN DETAIL

NOT TO SCALE

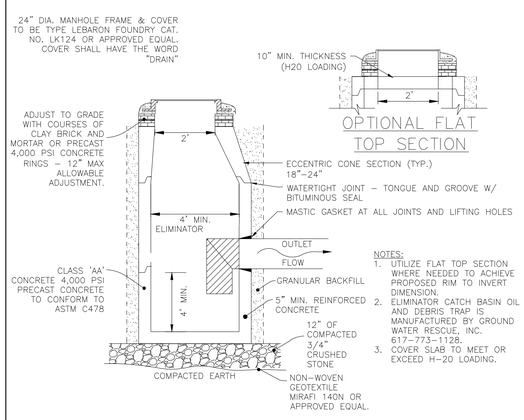

TYPICAL DEEP SUMP MANHOLE DETAIL

NOT TO SCALE

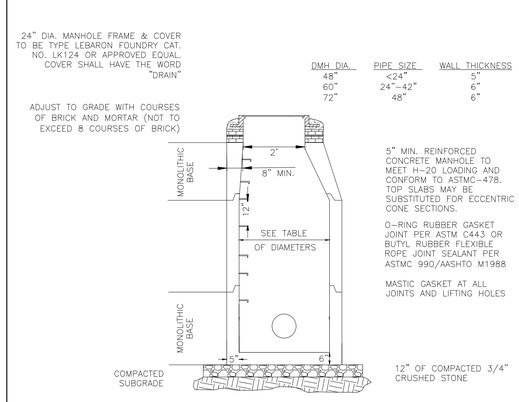

TYPICAL DRAIN MANHOLE DETAIL

NOT TO SCALE

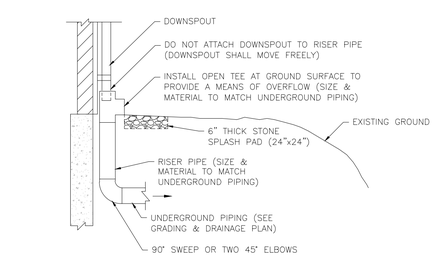

NOTE:

EACH BUILDING SHALL HAVE A MINIMUM OF ONE GUTTER DOWNSPOUT OVERFLOW ON EACH INDEPENDENT PIPE NETWORK. THE OVERFLOW SHALL BE INSTALLED ON THE DOWNSPOUT LOCATED AT THE LOWEST GROUND ELEVATION ALONG THE BUILDING WITHIN EACH PIPE NETWORK.

GUTTER DOWNSPOUT DETAIL

NOT TO SCALE

NOT FOR CONSTRUCTION

CDG PROJECT #: 19024

REVISIONS:

REV	DATE	COMMENT
1		
2		
3		
4		
5		
6		
7		
8		
9		
10		

CITY COUNCIL:

SEAL:

COMMONWEALTH OF MASSACHUSETTS
MATTHEW A. LEIDNER
CIVIL
No. 45641
REGISTERED PROFESSIONAL ENGINEER

MATTHEW A. LEIDNER, P.E.

PREPARED BY:

CIVIL DESIGN GROUP, LLC
21 HIGH STREET, SUITE 207
NORTH ANDOVER, MA 01845
www.cdgengineering.com
p: 978-794-5400 f: 978-965-3971

PREPARED FOR:

Pulte HOMES
115 FLANDERS ROAD
SUITE 200
WESTBOROUGH, MA 01581
www.pulte.com

PROJECT:

HIGHLAND AT VALE

THE VALE
WOBURN, MASSACHUSETTS

SCALE:

AS-NOTED

SHEET:

CONSTRUCTION DETAILS

24

DATE: 04/30/2020

NOTES:
1. SUBSURFACE DETENTION SYSTEM SHALL BE SET LEVEL AND IS COMPRISED OF TEN (10) 8'X8' CONCRETE STRUCTURES AS MANUFACTURED BY RETAIN-IT STORMWATER MANAGEMENT SYSTEMS.
2. GALLEYS ARE PROPOSED TO BE 5' (INSIDE HEIGHT) TALL.
3. CONCRETE. 5,000 PSI MINIMUM AFTER 28 DAYS.
4. H-20 DESIGN LOADING FOR AASHTO HS-20-44.
5. SIDE UNITS DO NOT HAVE FLOW THROUGH OPENINGS.

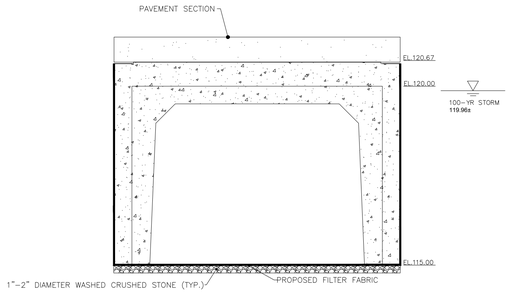

5' HIGH GALLEY
DETAIL SECTION

SUBSURFACE DETENTION SYSTEM (DET-MF-2) DETAIL

NOT TO SCALE

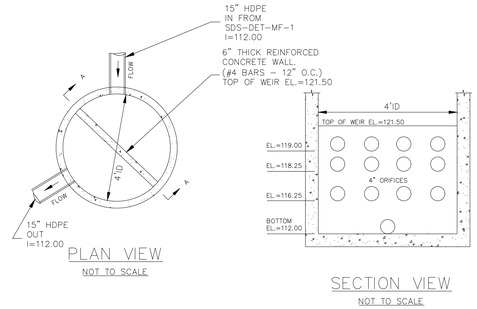

NOTES:
1. OUTLET CONTROL PRECAST STRUCTURE SHALL CONFORM TO THE TYPICAL DRAIN MANHOLE DETAIL.
2. INVERT ELEVATIONS SHALL BE VERIFIED BY THE CONTRACTOR.

OUTLET CONTROL STRUCTURE (SDS-DET-MF-1) DETAIL

NOT TO SCALE

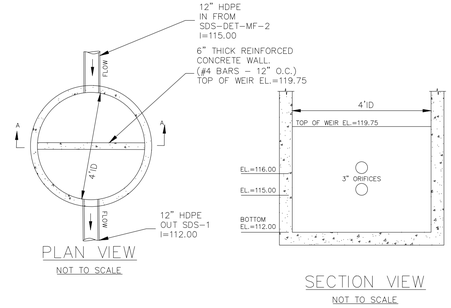

NOTES:
1. OUTLET CONTROL PRECAST STRUCTURE SHALL CONFORM TO THE TYPICAL DRAIN MANHOLE DETAIL.
2. INVERT ELEVATIONS SHALL BE VERIFIED BY THE CONTRACTOR.

OUTLET CONTROL STRUCTURE (SDS-DET-MF-2) DETAIL

NOT TO SCALE

WQU STRUCTURE	MODEL
DMH-35	CONTECH CASCADE CS-6
DMH-46	CONTECH CASCADE CS-5
DMH-47	CONTECH CDS-1515

WATER QUALITY UNIT (WQU) SCHEDULE

NOT TO SCALE

NOTES:
1. SUBSURFACE DETENTION SYSTEM SHALL BE SET LEVEL AND IS COMPRISED OF ONE HUNDRED AND FIFTY (150) 8'X8' DOUBLE STACKED CONCRETE STRUCTURES AS MANUFACTURED BY RETAIN-IT STORMWATER MANAGEMENT SYSTEMS.
2. GALLEYS ARE PROPOSED TO BE 10' (INSIDE HEIGHT) TALL.
3. CONCRETE. 5,000 PSI MINIMUM AFTER 28 DAYS.
4. H-20 DESIGN LOADING FOR AASHTO HS-20-44.
5. SIDE UNITS DO NOT HAVE FLOW THROUGH OPENINGS.

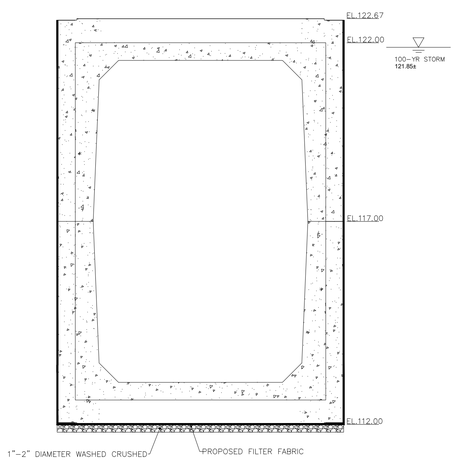

10' HIGH GALLEY DETAIL SECTION
(5' DOUBLE STACKED)

SUBSURFACE DETENTION SYSTEM (DET-MF-1) DETAIL

NOT TO SCALE

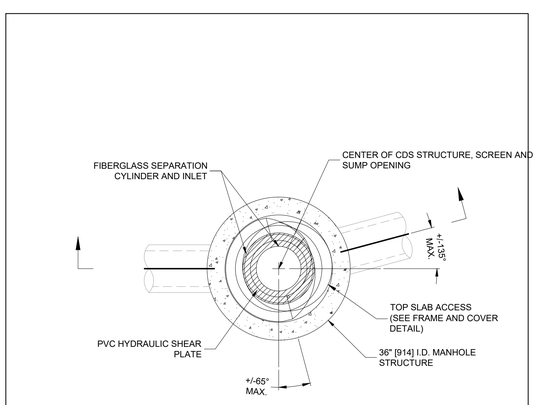

PLAN VIEW B-B
N.T.S.

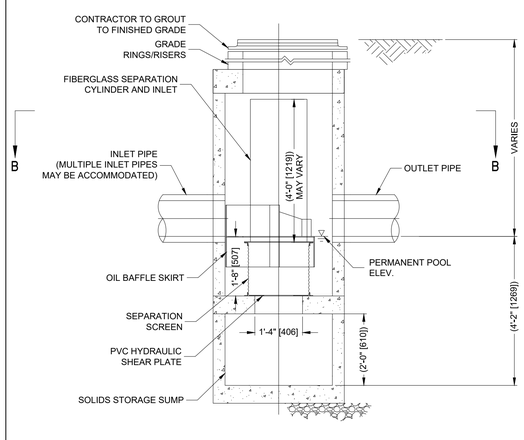

ELEVATION A-A
N.T.S.

CONTECH CDS1515-3 DETAIL

NOT TO SCALE

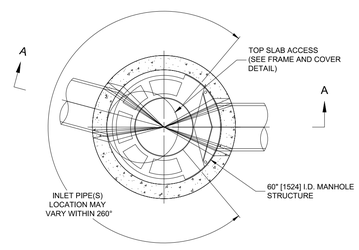

PLAN VIEW B-B
NOT TO SCALE

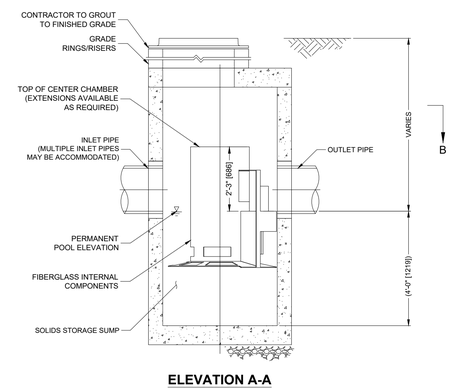

ELEVATION A-A
NOT TO SCALE

CONTECH CS-5 CASCADE SEPARATOR DETAIL

NOT TO SCALE

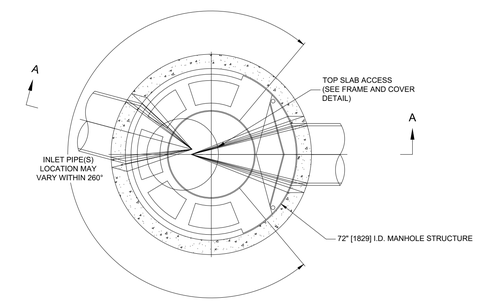

PLAN VIEW B-B
NOT TO SCALE

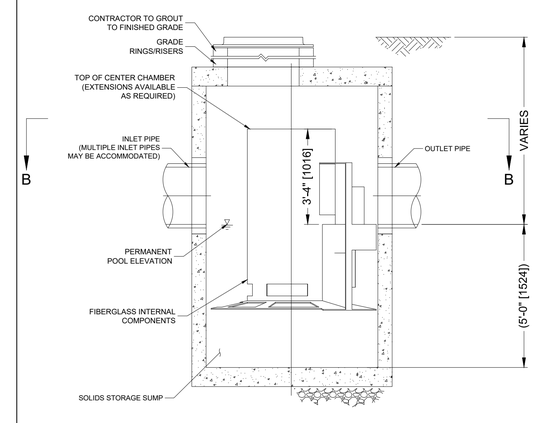

ELEVATION A-A
NOT TO SCALE

CONTECH CS-6 CASCADE SEPARATOR DETAIL

NOT TO SCALE

NOT FOR CONSTRUCTION

CDG PROJECT #: 19024

REVISIONS:

REV	DATE	COMMENT
1		
2		
3		
4		
5		
6		
7		
8		
9		
10		

CITY COUNCIL:

SEAL:

COMMONWEALTH OF MASSACHUSETTS
MATTHEW A. LEIDNER
CIVIL
No. 45641
REGISTERED PROFESSIONAL ENGINEER

MATTHEW A. LEIDNER, P.E.

PREPARED BY:

CIVIL DESIGN GROUP, LLC
21 HIGH STREET, SUITE 207
NORTH ANDOVER, MA 01845
www.cdgengineering.com
p: 978-794-5400 f: 978-965-3971

PREPARED FOR:

PULTE HOMES
115 FLANDERS ROAD
SUITE 200
WESTBOROUGH, MA 01581
www.pulte.com

PROJECT:

HIGHLAND AT VALE

THE VALE
WOBURN, MASSACHUSETTS

SCALE:

AS-NOTED

SHEET:

CONSTRUCTION DETAILS

25

DATE: 04/30/2020

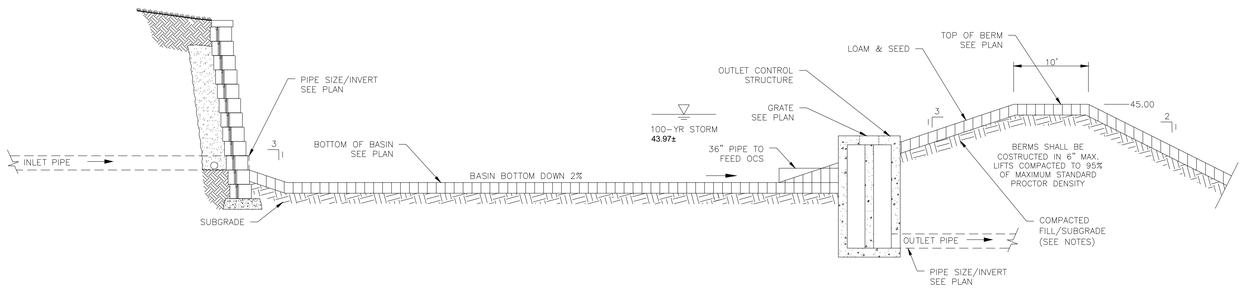

SIEVE	% PASSING
#4	100
#50	10–100
#100	0–20
#200	0–5

DETENTION BASIN (DET-TH-1) DETAIL

NOT TO SCALE

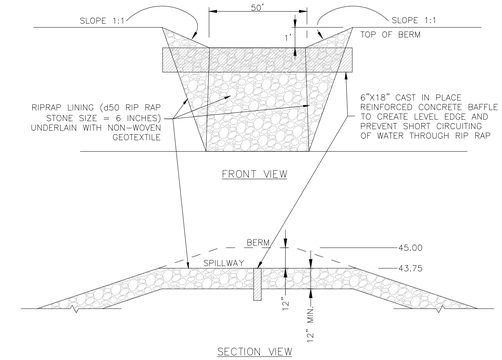

RIPRAP SPILLWAY DETAIL

NOT TO SCALE

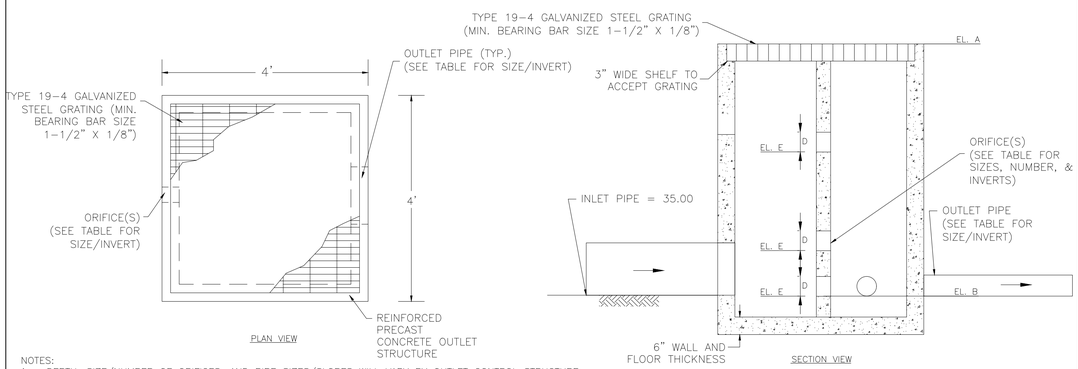

NOTES:
1. DEPTH, SIZE/NUMBER OF ORIFICES, AND PIPE SIZES/SLOPES WILL VARY BY OUTLET CONTROL STRUCTURE.
2. OUTLET STRUCTURE TO BE SET ON 12" OF ¾"–1½" COMPACTED CRUSHED STONE.
3. ORIFICES MAY BE LOCATED ON MORE THAN ONE FACE OF THE STRUCTURE PROVIDED THEY WILL NOT BE BURIED BENEATH GRADE.

TABLE OF DIMENSIONS							
STRUCTURE	GRATE ELEVATION (A)	OUTLET PIPE INVERT (B)	# OF OUTLET PIPES	OUTLET PIPE DIA. (C)	ORIFICE DIA. (D)	ORIFICE ELEVATIONS (E)	TOTAL # OF ORIFICES
OCS-1	43.25'	35.00'	3	12"	6"	35.00'	2
					6"	37.00'	3
					6"	41.00'	4

OUTLET CONTROL STRUCTURE (DET-TH-1) SCHEMATIC

NOT TO SCALE

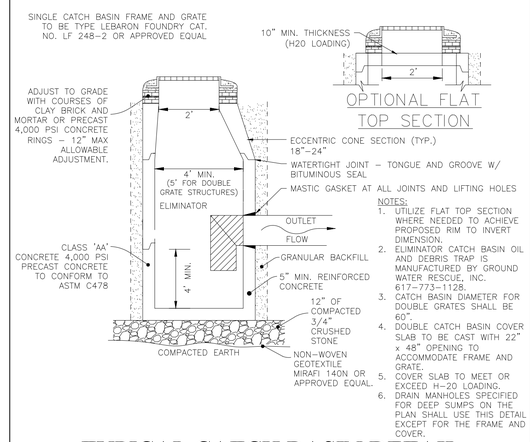

NOTES:
1. UTILIZE FLAT TOP SECTION WHERE NEEDED TO ACHIEVE PROPOSED RIM TO INVERT DIMENSION.
2. ELIMINATOR CATCH BASIN OIL AND DEBRIS TRAP IS MANUFACTURED BY GROUND WATER RESCUE, INC. 617-773-1128.
3. CATCH BASIN DIAMETER FOR DOUBLE GRATES SHALL BE 60".
4. DOUBLE CATCH BASIN COVER SLAB TO BE CAST WITH 22" x 48" OPENING TO ACCOMMODATE FRAME AND GRATE.
5. COVER SLAB TO MEET OR EXCEED H-20 LOADING.
6. DRAIN MANHOLES SPECIFIED FOR DEEP SUMPS ON THE PLAN SHALL USE THIS DETAIL EXCEPT FOR THE FRAME AND COVER.

TYPICAL CATCH BASIN DETAIL

NOT TO SCALE

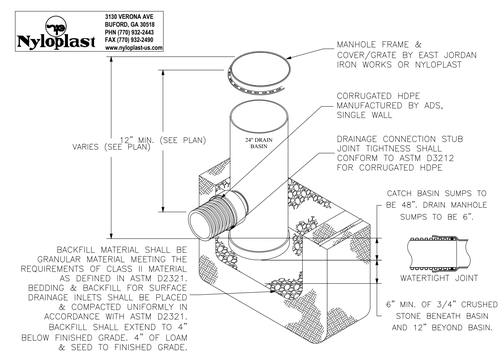

NYLOPLAST (NP) 24" MANHOLE OR YARD DRAIN

NOT TO SCALE

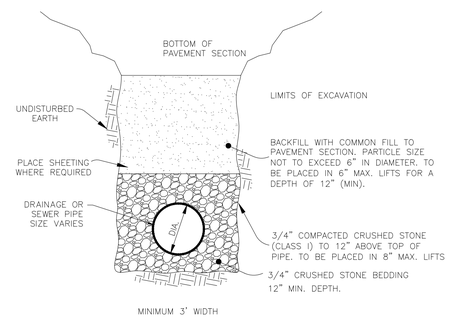

TYPICAL DRAIN & SEWER TRENCH DETAIL

NOT TO SCALE

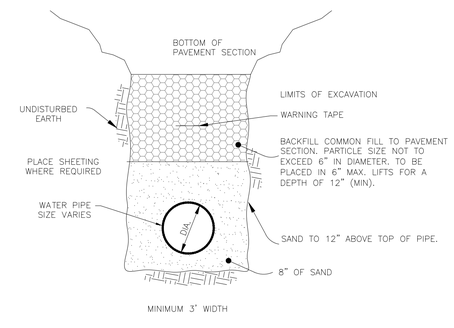

TYPICAL WATER TRENCH DETAIL

NOT TO SCALE

NOT FOR CONSTRUCTION

CDG PROJECT #: 19024

REVISIONS:

REV	DATE	COMMENT
1		
2		
3		
4		
5		
6		
7		
8		
9		
10		

CITY COUNCIL:

SEAL:

COMMONWEALTH OF MASSACHUSETTS
MATTHEW A. LEIDNER
CIVIL
No. 45641
REGISTERED PROFESSIONAL ENGINEER

MATTHEW A. LEIDNER, P.E.

PREPARED BY:

CIVIL DESIGN GROUP, LLC

21 HIGH STREET, SUITE 207
NORTH ANDOVER, MA 01845
www.cdgengineering.com
p: 978-794-5400 f: 978-965-3971

PREPARED FOR:

PULTE HOMES

115 FLANDERS ROAD
SUITE 200
WESTBOROUGH, MA 01581
www.pulte.com

PROJECT:

HIGHLAND AT VALE

THE VALE
WOBURN, MASSACHUSETTS

SCALE:

AS-NOTED

SHEET:

CONSTRUCTION DETAILS

26

DATE: 04/30/2020

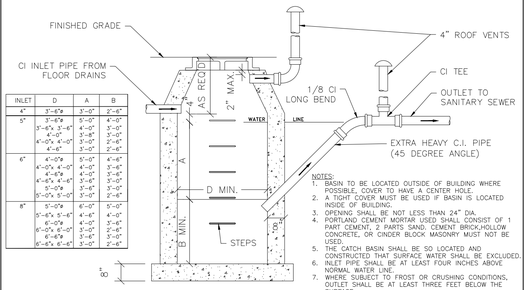

INLET	D	A	B
4"	3'-6"±	3'-0"	2'-6"
5"	3'-6"±	5'-0"	4'-0"
	3'-6"± 3'-6"	4'-0"	3'-0"
	4'-0"	3'-8"	3'-0"
	4'-0"± 4'-0"	3'-0"	2'-6"
	4'-6"	3'-0"	2'-6"
6"	4'-0"±	5'-0"	4'-6"
	4'-0"± 4'-0"	4'-0"	3'-6"
	4'-6"±	4'-0"	3'-6"
	4'-6"± 4'-6"	3'-6"	3'-0"
	5'-0"±	3'-6"	3'-0"
	5'-0"± 5'-0"	3'-0"	2'-6"
8"	5'-0"±	6'-0"	5'-0"
	5'-6"± 5'-6"	4'-6"	4'-0"
	6'-0"±	4'-0"	3'-6"
	6'-0"± 6'-0"	3'-0"	2'-6"
	6'-6"±	3'-6"	3'-0"
	6'-6"± 6'-6"	3'-0"	2'-6"

NOTES:
1. BASIN TO BE LOCATED OUTSIDE OF BUILDING WHERE POSSIBLE. COVER TO HAVE A CENTER HOLE.
2. A TIGHT COVER MUST BE USED IF BASIN IS LOCATED INSIDE OF BUILDING.
3. OPENING SHALL BE NOT LESS THAN 24" DIA.
4. PORTLAND CEMENT MORTAR USED SHALL CONSIST OF 1 PART CEMENT, 2 PARTS SAND. CEMENT BRICK,HOLLOW CONCRETE, OR CINDER BLOCK MASONRY MUST NOT BE USED.
5. THE CATCH BASIN SHALL BE SO LOCATED AND CONSTRUCTED THAT SURFACE WATER SHALL BE EXCLUDED.
6. INLET PIPE SHALL BE AT LEAST FOUR INCHES ABOVE NORMAL WATER LINE.
7. WHERE SUBJECT TO FROST OR CRUSHING CONDITIONS, OUTLET SHALL BE AT LEAST THREE FEET BELOW THE SURFACE.
8. THE NEW CATCH BASIN MUST BE FILLED WITH CLEAN WATER BEFORE USING, AND AFTER BEING EMPTIED FOR PERIODIC CLEANING.
9. ALUMINUM OR PLASTIC COATED WROUGHT IRON STEPS SHALL BE SPACED ABOUT 18" APART.
10. BOTH VENTS SHALL BE EXTENDED INDEPENDENTLY PER APPLICABLE CODE REQUIREMENTS.

GAS TRAP DETAIL

NOT TO SCALE

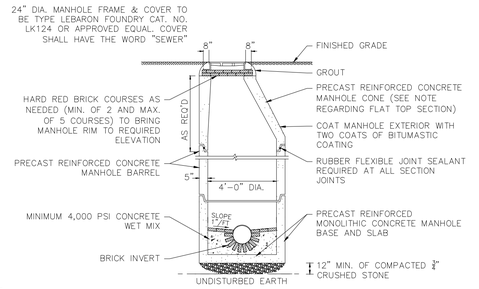

NOTES:
1. TYPICAL SANITARY MANHOLE TO BE 4 FEET IN DIAMETER.
2. 5'-0" DIAMETER FOR ALL MANHOLE DEPTHS GREATER THAN 12 FEET (6" MIN. WALL THICKNESS AND 7" MIN. BASE THICKNESS FOR 5'-0" DIAMETER MANHOLES).
3. UTILIZE FLAT TOP SECTION IF NEEDED FOR SHALLOW INSTALLATION.
4. INNER EDGE OF BRICK TABLE TO BE AT ELEVATION OF CROWN OF TOP OF PIPE.
5. DESIGN LOAD -- HS20.
6. ALL INVERTS SHALL BE 4,000 PSI CEMENT CONCRETE IN VOID AREAS AND RED SEWER BRICK CONSTRUCTION.
7. ALL INVERTS SHALL BE BUILT IN PLACE AFTER ALL PIPES HAVE BEEN INSTALLED.
8. FILL ALL LIFTING HOLES WITH NON-SHRINK GROUT AFTER INSTALLATION.

TYPICAL SEWER MANHOLE DETAIL

NOT TO SCALE

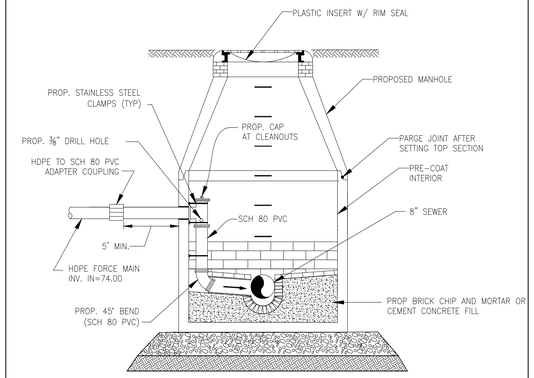

FORCE MAIN (FM) DISCHARGE MANHOLE DETAIL

NOT TO SCALE

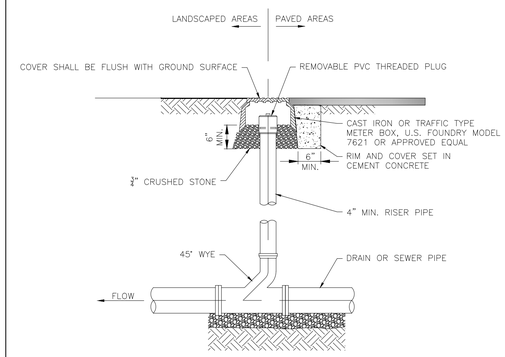

TYPICAL CLEANOUT DETAIL

NOT TO SCALE

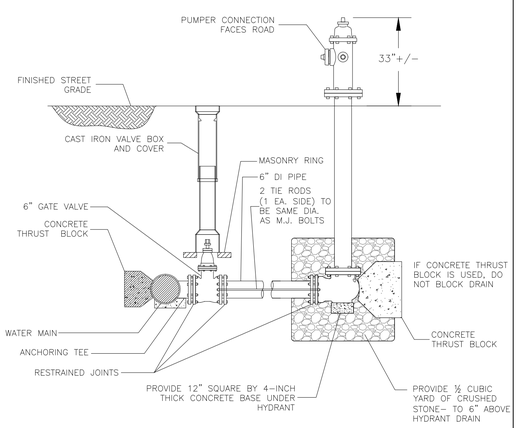

FIRE HYDRANT DETAIL

NOT TO SCALE

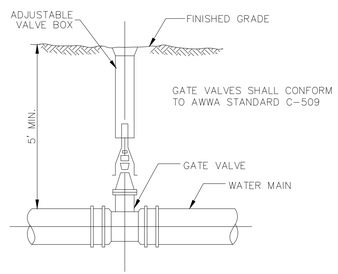

TYPICAL GATE VALVE DETAIL

NOT TO SCALE

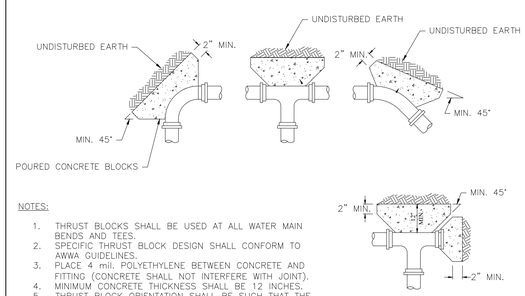

NOTES:
1. THRUST BLOCKS SHALL BE USED AT ALL WATER MAIN BENDS AND TEES.
2. SPECIFIC THRUST BLOCK DESIGN SHALL CONFORM TO AWWA GUIDELINES.
3. PLACE 4 mil. POLYETHYLENE BETWEEN CONCRETE AND FITTING (CONCRETE SHALL NOT INTERFERE WITH JOINT).
4. MINIMUM CONCRETE THICKNESS SHALL BE 12 INCHES.
5. THRUST BLOCK ORIENTATION SHALL BE SUCH THAT THE CENTER OF THE FITTING CORRESPONDS WITH THE CENTER OF THE THRUST BLOCK.
6. THE MINIMUM ALLOWABLE ANGLE (EITHER VERTICAL OR HORIZONTAL) SHALL BE 45 DEGREES.

TYPICAL THRUST BLOCK DETAIL

NOT TO SCALE

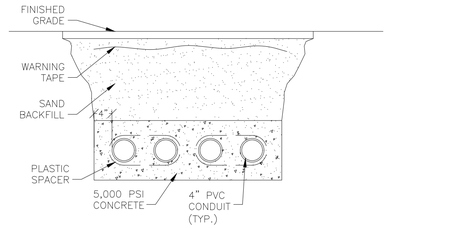

NOTES:
1. DUCT BANK TO BE CONSTRUCTED PER UTILITY COMPANY STANDARDS IF DIFFERENT THAN THIS DETAIL.

TYPICAL ELECTRICAL/TELEPHONE/CABLE DUCT BANK DETAIL

NOT TO SCALE

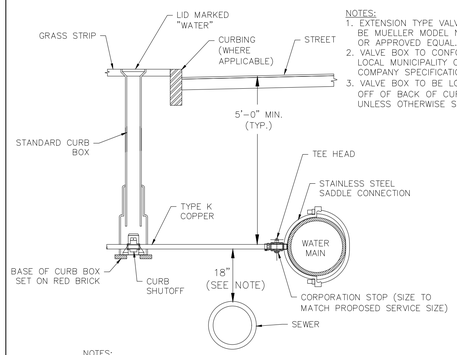

NOTES:
1. EXTENSION TYPE VALVE BOX TO BE MUELLER MODEL NO. H-10336 OR APPROVED EQUAL.
2. VALVE BOX TO CONFORM TO THE LOCAL MUNICIPALITY OR UTILITY COMPANY SPECIFICATIONS.
3. VALVE BOX TO BE LOCATED 18" OFF OF BACK OF CURB (TYP.) UNLESS OTHERWISE SHOWN.

NOTES:
1. SEWER SHALL BE ENCASED IN CONCRETE (SEE DETAIL) IF THE SEWER IS PLACED WITHIN 10' (HORIZONTALLY) OF A WATER LINE AND THE SEWER IS EITHER ABOVE OR WITHIN 18" BELOW THE WATER LINE.

TYPICAL TOWNHOME WATER SERVICE CONNECTION DETAIL

NOT TO SCALE

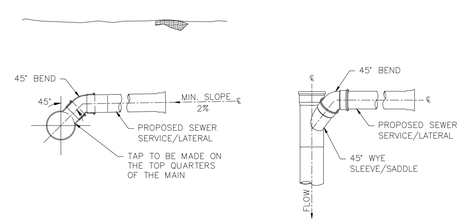

SECTION VIEW

NOT TO SCALE

PLAN VIEW

NOT TO SCALE

NOTES:
1. SEWER SERVICES SHALL BE 6" SDR-35 PVC UNLESS OTHERWISE NOTED ON THE PLAN. THE CONTRACTOR SHALL CONFIRM THE PIPE SIZE AND MATERIAL WITH THE MUNICIPALITY PRIOR TO INSTALLATION.
2. SEWER TAP AND LATERAL SHALL BE CONSTRUCTED IN ACCORDANCE WITH APPLICABLE MUNICIPAL REQUIREMENTS AND/OR STANDARDS.
3. SEWER LATERAL SHALL BE PITCHED AT 2.0% MINIMUM SLOPE UNLESS OTHERWISE INDICATED OR UNLESS OTHERWISE REQUIRED BY THE MUNICIPALITY.

TYPICAL SEWER SERVICE CONNECTION DETAIL

NOT TO SCALE

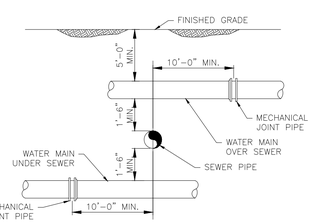

NOTES:
1. SEWERS SHALL BE KEPT REMOTE FROM WATER SUPPLY PIPING AND STRUCTURES. WHEREVER FEASIBLE, SEWERS SHOULD BE LAID AT A MINIMUM HORIZONTAL DISTANCE OF 10 FEET FROM WATER MAINS. IF LOCAL CONDITIONS PREVENT THIS, THE WATER MAIN SHOULD BE LAID IN A SEPARATE TRENCH, AND THE ELEVATIONS OF THE CROWN OF THE SEWER PLACED AT LEAST 18 INCHES BELOW THE INVERT OF THE WATER MAIN.
2. WHENEVER SEWERS MUST CROSS UNDER WATER MAINS, THE CROWN OF THE SEWER SHOULD BE PLACED A MINIMUM OF 18 INCHES BELOW THE INVERT OF THE WATER MAIN. IN ADDITION, THE WATER MAIN MUST BE CONSTRUCTED WITH ONE FULL LENGTH OF PIPE CENTERED ABOVE THE CROSSING. THE WATER PIPE SHALL HAVE MECHANICAL JOINTS FOR A MINIMUM DISTANCE OF 10 FEET ON EACH SIDE OF THE CROSSING.
3. WHEN IT IS IMPOSSIBLE TO OBTAIN HORIZONTAL OR VERTICAL SEPARATION AS STIPULATED ABOVE, BOTH THE WATER AND THE SEWER PIPING SHALL BE CONSTRUCTED SUCH THAT THE PIPE JOINTS ARE PLACED AS FAR AWAY FROM THE CROSSING AS POSSIBLE AND THE PIPE CROSSING SHALL BE ENCASED IN CONCRETE FOR A DISTANCE OF 10 FEET ON ALL SIDES OF THE CROSSING.

WATER/SEWER CROSSING DETAIL

NOT TO SCALE

NOT FOR CONSTRUCTION

CDG PROJECT #: 19024

REVISIONS:

REV	DATE	COMMENT
1		
2		
3		
4		
5		
6		
7		
8		
9		
10		

CITY COUNCIL:

SEAL:

COMMONWEALTH OF MASSACHUSETTS
MATTHEW A. LEIDNER
CIVIL
No. 45641
REGISTERED PROFESSIONAL ENGINEER

MATTHEW A. LEIDNER, P.E.

PREPARED BY:

CIVIL DESIGN GROUP, LLC

21 HIGH STREET, SUITE 207
NORTH ANDOVER, MA 01845
www.cdgengineering.com
p: 978-794-5400 f: 978-965-3971

PREPARED FOR:

Pulte HOMES

115 FLANDERS ROAD
SUITE 200
WESTBOROUGH, MA 01581
www.pulte.com

PROJECT:

HIGHLAND AT VALE

THE VALE
WOBURN, MASSACHUSETTS

SCALE:

AS-NOTED

SHEET:

CONSTRUCTION DETAILS

27

DATE: 04/30/2020

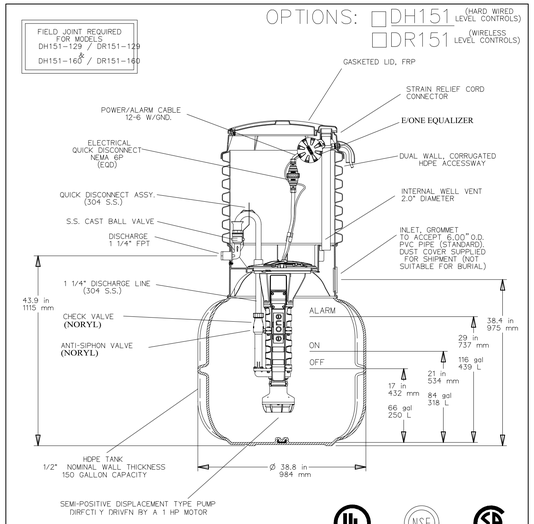

CONCRETE BALLAST MAY BE REQUIRED SEE INSTALLATION INSTRUCTIONS FOR DETAILS

AD	CH	07/13/07	A	
DR BY	CHK'D	DATE	ISSUE	SCALE

e one SEWER SYSTEMS

MODEL DH151 / DR151 DETAIL SHEET

NA0051P02

E-ONE MODEL DH-151 INTERNAL DETAIL

NOT TO SCALE

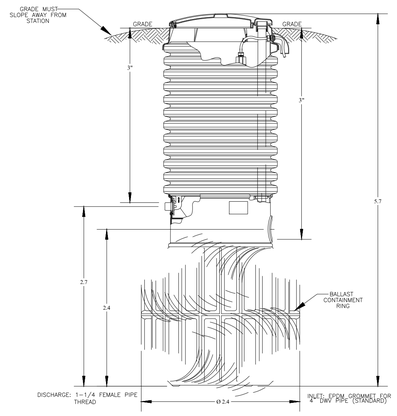

CONCRETE BALLAST MAY BE REQUIRED SEE INSTALLATION INSTRUCTIONS FOR DETAILS

AD	CAH	7/13/07	B	1/16
DR BY	CHK'D	DATE	ISSUE	SCALE

e one SEWER SYSTEMS

MODEL DH151-93 / DR151-93

NA0051P06

E-ONE MODEL DH-151 EXTERNAL DETAIL

NOT TO SCALE

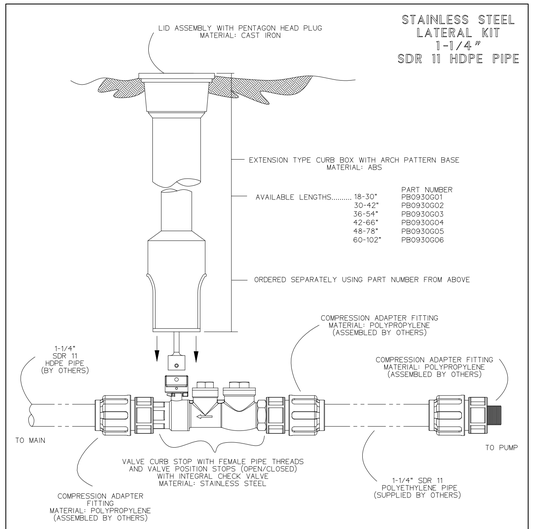

NOTES:

1. SS CURB STOP/CHECK VALVE AND FITTINGS ARE PROVIDED SEPARATELY, TO BE ASSEMBLED BY OTHERS
2. TO ASSEMBLE, APPLY A DOUBLE LAYER OF TEFLON TAPE, AND A LAYER OF PIPE DOPE (SUPPLIED BY OTHERS) TO THE THREADS ON THE PLASTIC FITTINGS AND INSTALL PER THE MANUFACTURER'S INSTRUCTIONS
3. ASSEMBLY IS TO BE PRESSURE TESTED (BY OTHERS)
4. ASSEMBLY IS TO BE USED WITH SDR11 HDPE PIPE
5. TO ORDER SS LATERAL KIT, USE PART NUMBER NC0193G01
6. CURB BOX IS TO BE ORDERED SEPARATELY, SEE ABOVE

KIT PARTS ARE NOT ASSEMBLED

SGS	DN	11/02/11	A	3/16
DR BY	CHK'D	DATE	ISSUE	SCALE

e one SEWER SYSTEMS

STAINLESS STEEL LATERAL KIT 1-1/4" SDR 11 HDPE PIPE

NA0330P02

E-ONE LATERAL DETAIL

NOT TO SCALE

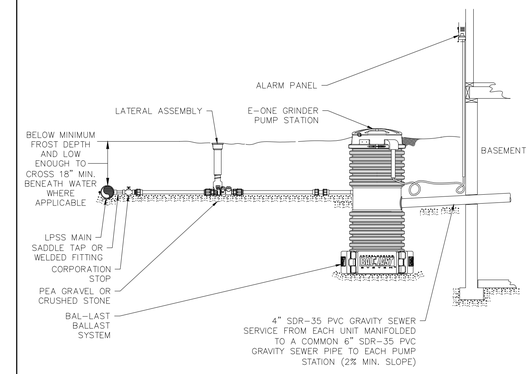

TYPICAL PUMP & BALLAST INSTALLATION

NOT TO SCALE

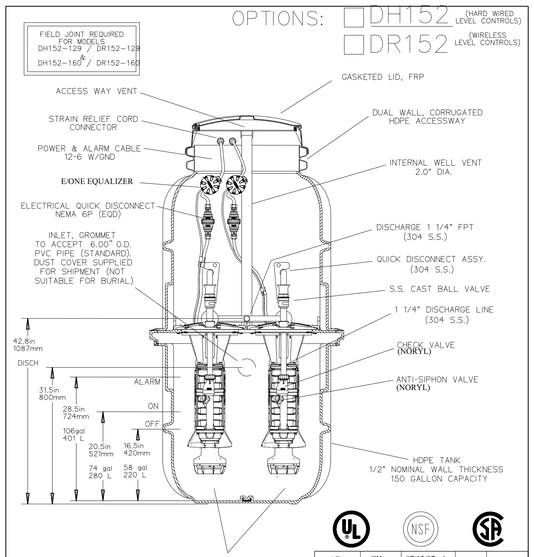

CONCRETE BALLAST MAY BE REQUIRED SEE INSTALLATION INSTRUCTIONS FOR DETAILS

AD	CH	07/13/07	A	
DR BY	CHK'D	DATE	ISSUE	SCALE

e one SEWER SYSTEMS

MODEL DH152 / DR152 DETAIL SHEET

NA0052P02

E-ONE MODEL DH-152 INTERNAL DETAIL

NOT TO SCALE

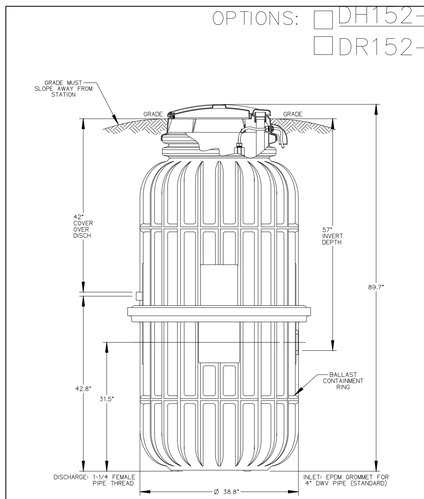

CONCRETE BALLAST MAY BE REQUIRED SEE INSTALLATION INSTRUCTIONS FOR DETAILS

AD	CAH	7/13/07	A	1/16
DR BY	CHK'D	DATE	ISSUE	SCALE

e one SEWER SYSTEMS

MODEL DH152-93 / DR152-93

NA0052P04

E-ONE MODEL DH-152 EXTERNAL DETAIL

NOT TO SCALE

FRMAHONY & associates, inc.
273 WEYMOUTH STREET
ROCKLAND, MASSACHUSETTS 02370
(781) 982-9300
Fax: (781) 982-1056

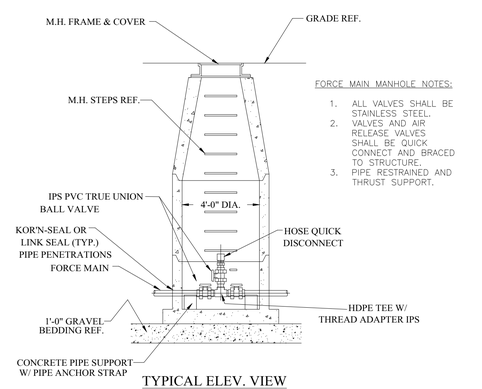

TYPICAL ELEV. VIEW

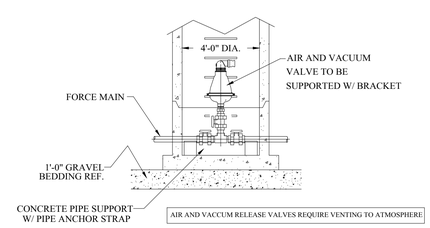

AIR AND VACCUM RELEASE VALVES REQUIRE VENTING TO ATMOSPHERE

OPTIONAL ELEV. VIEW

AIR & VACUUM VALVE MTG. DETAIL

NOTES: SDR11 HDPE FITTINGS TO BE ELECTRO-FUSED

INLINE FLUSHING MANHOLE DETAIL

NOT TO SCALE

FRMAHONY & associates, inc.
273 WEYMOUTH STREET
ROCKLAND, MASSACHUSETTS 02370
(781) 982-9300
Fax: (781) 982-1056

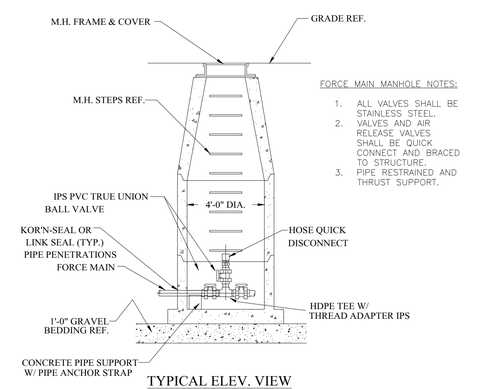

TYPICAL ELEV. VIEW

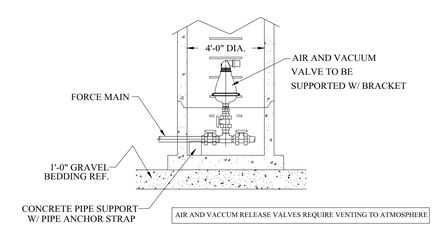

AIR AND VACCUM RELEASE VALVES REQUIRE VENTING TO ATMOSPHERE

OPTIONAL ELEV. VIEW

AIR & VACUUM VALVE MTG. DETAIL

NOTES: SDR11 HDPE FITTINGS TO BE ELECTRO-FUSED

TERMINAL FLUSHING MANHOLE DETAIL

NOT TO SCALE

NOT FOR CONSTRUCTION

CDG PROJECT #: 19024

REVISIONS:

REV	DATE	COMMENT
1		
2		
3		
4		
5		
6		
7		
8		
9		
10		

CITY COUNCIL:

SEAL:

COMMONWEALTH OF MASSACHUSETTS — MATTHEW A. LEIDNER — CIVIL — No. 45641 — REGISTERED PROFESSIONAL ENGINEER

MATTHEW A. LEIDNER, P.E.

PREPARED BY:

CIVIL DESIGN GROUP, LLC
21 HIGH STREET, SUITE 207
NORTH ANDOVER, MA 01845
www.cdgengineering.com
p: 978-794-5400 f: 978-965-3971

PREPARED FOR:

PULTE HOMES
115 FLANDERS ROAD
SUITE 200
WESTBOROUGH, MA 01581
www.pulte.com

PROJECT:

HIGHLAND AT VALE

THE VALE
WOBURN, MASSACHUSETTS

SCALE:

AS-NOTED

SHEET:

CONSTRUCTION DETAILS

28

DATE: 04/30/2020

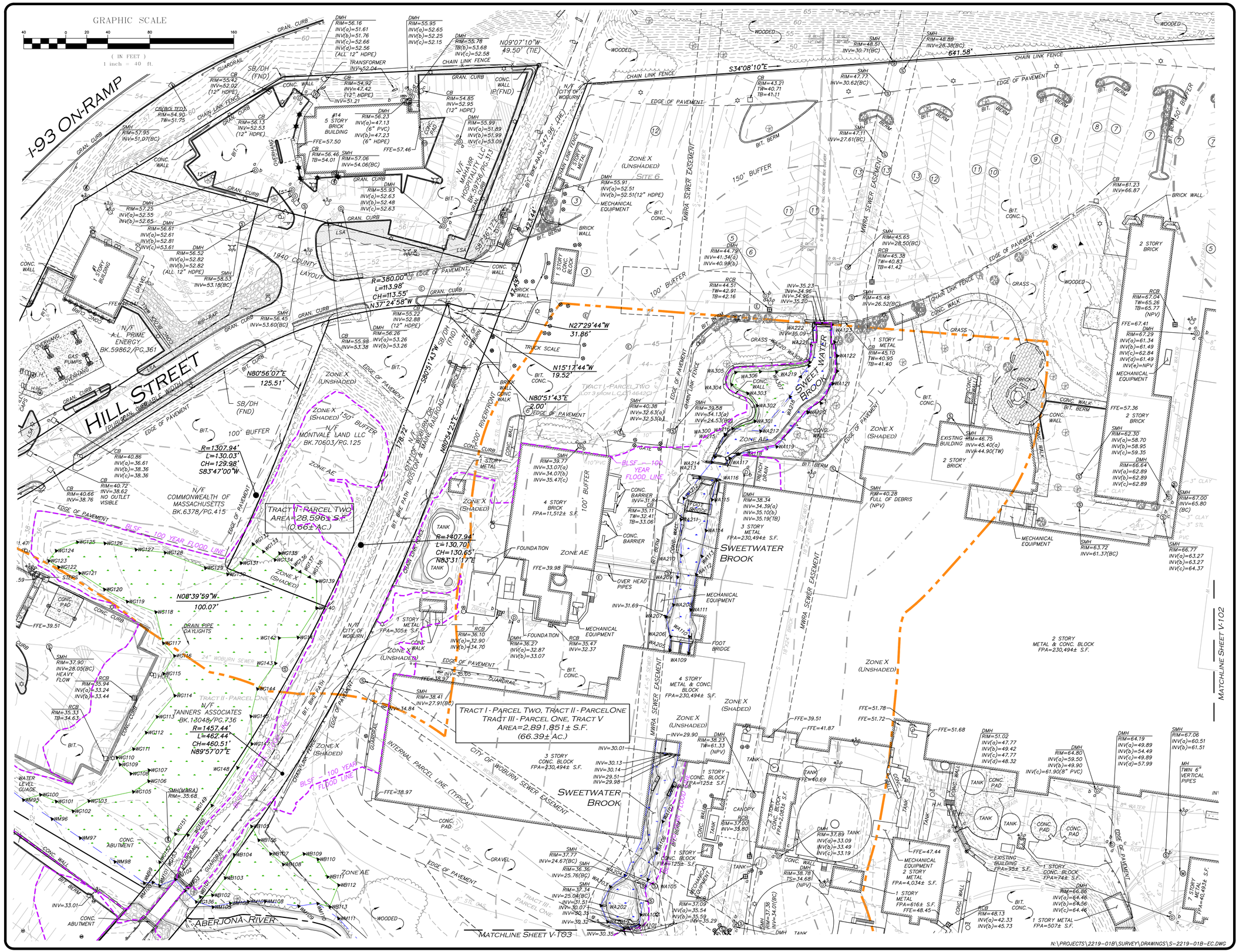

WE HEREBY CERTIFY THAT THIS PLAN IS THE RESULT OF AN ACTUAL ON THE GROUND SURVEY PERFORMED ON OR BETWEEN DECEMBER 30, 2015 AND JANUARY 29, 2020.

APR 14, 2020

PROFESSIONAL LAND SURVEYOR FOR ALLEN & MAJOR ASSOCIATES, INC.

COMMONWEALTH OF MASSACHUSETTS
NORMAN I. LIPSITZ
No. 28446
PROFESSIONAL LAND SURVEYOR

04/14/20

NOTE

1. SEE SHEET V-103 FOR NOTES, LEGEND, AND LOCUS MAP.

REV	DATE	DESCRIPTION

APPLICANT\OWNER:
MONTVALE LAND LLC C/O
LEGGAT MCCALL PROPERTIES, LLC
TEN POST OFFICE SQUARE
BOSTON, MA 02109

PROJECT:
THE VALE
1 HILL STREET
WOBURN, MA

PROJECT NO.	2219-01B	DATE:	04/13/20
SCALE:	1" = 40'	DWG. NAME:	S-2219-01B-EC
DRAFTED BY:	AJR	CHECKED BY:	NIL

PREPARED BY:

ALLEN & MAJOR ASSOCIATES, INC.
civil engineering ◆ land surveying
environmental consulting ◆ landscape architecture
www.allenmajor.com
100 COMMERCE WAY
WOBURN MA 01801-8501
TEL: (781) 935-6889
FAX: (781) 935-2896

WOBURN, MA ◆ LAKEVILLE, MA ◆ MANCHESTER, NH

THIS DRAWING HAS BEEN PREPARED IN DIGITAL FORMAT. CLIENT/CLIENT'S REPRESENTATIVE OR CONSULTANTS MAY BE PROVIDED COPIES OF DRAWINGS AND SPECIFICATIONS FOR HIS/HER INFORMATION AND/OR SPECIFIC USE ON THIS PROJECT. DUE TO THE POTENTIAL THAT THE PROVIDED INFORMATION MAY BE MODIFIED UNINTENTIONALLY OR OTHERWISE, ALLEN & MAJOR ASSOCIATES, INC. MAY REMOVE ALL INDICATION OF THE DOCUMENT'S AUTHORSHIP ON THE DIGITAL MEDIA. PRINTED REPRESENTATIONS OR PORTABLE DOCUMENT FORMAT OF THE DRAWINGS AND SPECIFICATIONS ISSUED SHALL BE THE ONLY RECORD COPIES OF ALLEN & MAJOR ASSOCIATES, INC.'S WORK PRODUCT.

DRAWING TITLE:
EXISTING CONDITIONS

SHEET No.
V-101

Copyright©2020 Allen & Major Associates, Inc.
All Rights Reserved

N:\PROJECTS\2219-01B\SURVEY\DRAWINGS\S-2219-01B-EC.DWG

WE HEREBY CERTIFY THAT THIS PLAN IS THE RESULT OF AN ACTUAL ON THE GROUND SURVEY PERFORMED ON OR BETWEEN DECEMBER 30, 2015 AND JANUARY 29, 2020.

APR. 14, 2020

PROFESSIONAL LAND SURVEYOR FOR ALLEN & MAJOR ASSOCIATES, INC.

COMMONWEALTH OF MASSACHUSETTS
NORMAN I. LIPSITZ
No. 28446
PROFESSIONAL LAND SURVEYOR

04/14/20

NOTE

1. SEE SHEET V-103 FOR NOTES, LEGEND, AND LOCUS MAP.

REV	DATE	DESCRIPTION

APPLICANT\OWNER:
MONTVALE LAND LLC C/O
LEGGAT MCCALL PROPERTIES, LLC
TEN POST OFFICE SQUARE
BOSTON, MA 02109

PROJECT:
THE VALE
1 HILL STREET
WOBURN, MA

PROJECT NO.	2219-01B	DATE:	04/13/20
SCALE:	1" = 40'	DWG. NAME:	S-2219-01B-EC
DRAFTED BY:	AJR	CHECKED BY:	NIL

PREPARED BY:
ALLEN & MAJOR ASSOCIATES, INC.
civil engineering ◆ land surveying
environmental consulting ◆ landscape architecture
www.allenmajor.com
100 COMMERCE WAY
WOBURN MA 01801-8501
TEL: (781) 935-6889
FAX: (781) 935-2896
WOBURN, MA ◆ LAKEVILLE, MA ◆ MANCHESTER, NH

THIS DRAWING HAS BEEN PREPARED IN DIGITAL FORMAT. CLIENT/CLIENTS REPRESENTATIVE OR CONSULTANTS MAY BE PROVIDED COPIES OF DRAWINGS AND SPECIFICATIONS FOR HIS/HER INFORMATION AND/OR SPECIFIC USE ON THIS PROJECT. DUE TO THE POTENTIAL THAT THE PROVIDED INFORMATION MAY BE MODIFIED UNINTENTIONALLY OR OTHERWISE, ALLEN & MAJOR ASSOCIATES, INC. MAY REMOVE ALL INDICATION OF THE DOCUMENT'S AUTHORSHIP ON THE DIGITAL MEDIA. PRINTED REPRESENTATIONS OR PORTABLE DOCUMENT FORMAT OF THE DRAWINGS AND SPECIFICATIONS ISSUED SHALL BE THE ONLY RECORD COPIES OF ALLEN & MAJOR ASSOCIATES, INC.'S WORK PRODUCT.

DRAWING TITLE: EXISTING CONDITIONS

SHEET No. V-102

Copyright©2020 Allen & Major Associates, Inc.
All Rights Reserved

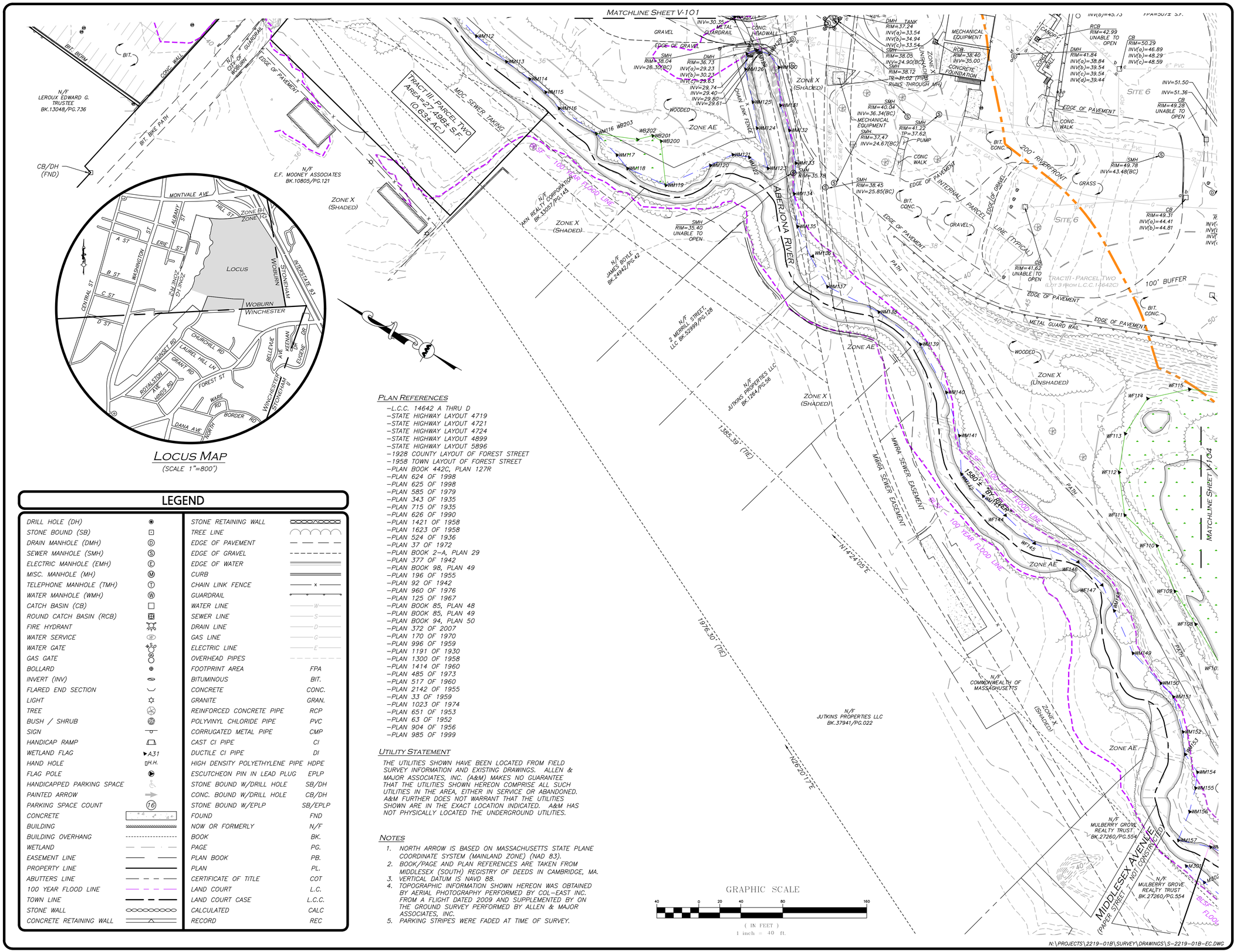

LOCUS MAP

(SCALE 1"=800')

LEGEND

DRILL HOLE (DH)		STONE RETAINING WALL	
STONE BOUND (SB)		TREE LINE	
DRAIN MANHOLE (DMH)		EDGE OF PAVEMENT	
SEWER MANHOLE (SMH)		EDGE OF GRAVEL	
ELECTRIC MANHOLE (EMH)		EDGE OF WATER	
MISC. MANHOLE (MH)		CURB	
TELEPHONE MANHOLE (TMH)		CHAIN LINK FENCE	
WATER MANHOLE (WMH)		GUARDRAIL	
CATCH BASIN (CB)		WATER LINE	W
ROUND CATCH BASIN (RCB)		SEWER LINE	S
FIRE HYDRANT		DRAIN LINE	D
WATER SERVICE		GAS LINE	G
WATER GATE		ELECTRIC LINE	E
GAS GATE		OVERHEAD PIPES	
BOLLARD		FOOTPRINT AREA	FPA
INVERT (INV)		BITUMINOUS	BIT.
FLARED END SECTION		CONCRETE	CONC.
LIGHT		GRANITE	GRAN.
TREE		REINFORCED CONCRETE PIPE	RCP
BUSH / SHRUB		POLYVINYL CHLORIDE PIPE	PVC
SIGN		CORRUGATED METAL PIPE	CMP
HANDICAP RAMP		CAST CI PIPE	CI
WETLAND FLAG	A31	DUCTILE CI PIPE	DI
HAND HOLE	H.H.	HIGH DENSITY POLYETHYLENE PIPE	HDPE
FLAG POLE		ESCUTCHEON PIN IN LEAD PLUG	EPLP
HANDICAPPED PARKING SPACE		STONE BOUND W/DRILL HOLE	SB/DH
PAINTED ARROW		CONC. BOUND W/DRILL HOLE	CB/DH
PARKING SPACE COUNT	16	STONE BOUND W/EPLP	SB/EPLP
CONCRETE		FOUND	FND
BUILDING		NOW OR FORMERLY	N/F
BUILDING OVERHANG		BOOK	BK.
WETLAND		PAGE	PG.
EASEMENT LINE		PLAN BOOK	PB.
PROPERTY LINE		PLAN	PL.
ABUTTERS LINE		CERTIFICATE OF TITLE	COT
100 YEAR FLOOD LINE		LAND COURT	L.C.
TOWN LINE		LAND COURT CASE	L.C.C.
STONE WALL		CALCULATED	CALC
CONCRETE RETAINING WALL		RECORD	REC

PLAN REFERENCES

- L.C.C. 14642 A THRU D
- STATE HIGHWAY LAYOUT 4719
- STATE HIGHWAY LAYOUT 4721
- STATE HIGHWAY LAYOUT 4724
- STATE HIGHWAY LAYOUT 4899
- STATE HIGHWAY LAYOUT 5896
- 1928 COUNTY LAYOUT OF FOREST STREET
- 1958 TOWN LAYOUT OF FOREST STREET
- PLAN BOOK 442C, PLAN 127R
- PLAN 624 OF 1998
- PLAN 625 OF 1998
- PLAN 585 OF 1979
- PLAN 343 OF 1935
- PLAN 715 OF 1935
- PLAN 626 OF 1990
- PLAN 1421 OF 1958
- PLAN 1623 OF 1958
- PLAN 524 OF 1936
- PLAN 37 OF 1972
- PLAN BOOK 2-A, PLAN 29
- PLAN 377 OF 1942
- PLAN BOOK 98, PLAN 49
- PLAN 196 OF 1955
- PLAN 92 OF 1942
- PLAN 960 OF 1976
- PLAN 125 OF 1967
- PLAN BOOK 85, PLAN 48
- PLAN BOOK 85, PLAN 49
- PLAN BOOK 94, PLAN 50
- PLAN 372 OF 2007
- PLAN 170 OF 1970
- PLAN 996 OF 1959
- PLAN 1191 OF 1930
- PLAN 1300 OF 1958
- PLAN 1414 OF 1960
- PLAN 485 OF 1973
- PLAN 517 OF 1960
- PLAN 2142 OF 1955
- PLAN 33 OF 1959
- PLAN 1023 OF 1974
- PLAN 651 OF 1953
- PLAN 63 OF 1952
- PLAN 904 OF 1956
- PLAN 985 OF 1999

UTILITY STATEMENT

THE UTILITIES SHOWN HAVE BEEN LOCATED FROM FIELD SURVEY INFORMATION AND EXISTING DRAWINGS. ALLEN & MAJOR ASSOCIATES, INC. (A&M) MAKES NO GUARANTEE THAT THE UTILITIES SHOWN HEREON COMPRISE ALL SUCH UTILITIES IN THE AREA, EITHER IN SERVICE OR ABANDONED. A&M FURTHER DOES NOT WARRANT THAT THE UTILITIES SHOWN ARE IN THE EXACT LOCATION INDICATED. A&M HAS NOT PHYSICALLY LOCATED THE UNDERGROUND UTILITIES.

NOTES

1. NORTH ARROW IS BASED ON MASSACHUSETTS STATE PLANE COORDINATE SYSTEM (MAINLAND ZONE) (NAD 83).
2. BOOK/PAGE AND PLAN REFERENCES ARE TAKEN FROM MIDDLESEX (SOUTH) REGISTRY OF DEEDS IN CAMBRIDGE, MA.
3. VERTICAL DATUM IS NAVD 88.
4. TOPOGRAPHIC INFORMATION SHOWN HEREON WAS OBTAINED BY AERIAL PHOTOGRAPHY PERFORMED BY COL-EAST INC. FROM A FLIGHT DATED 2009 AND SUPPLEMENTED BY ON THE GROUND SURVEY PERFORMED BY ALLEN & MAJOR ASSOCIATES, INC.
5. PARKING STRIPES WERE FADED AT TIME OF SURVEY.

N:\PROJECTS\2219-01B\SURVEY\DRAWINGS\S-2219-01B-EC.DWG

WE HEREBY CERTIFY THAT THIS PLAN IS THE RESULT OF AN ACTUAL ON THE GROUND SURVEY PERFORMED ON OR BETWEEN DECEMBER 30, 2015 AND JANUARY 29, 2020.

APR 14, 2020

PROFESSIONAL LAND SURVEYOR FOR ALLEN & MAJOR ASSOCIATES, INC.

COMMONWEALTH OF MASSACHUSETTS
NORMAN I. LIPSITZ
No. 28446
PROFESSIONAL LAND SURVEYOR

04/14/20

REV	DATE	DESCRIPTION

APPLICANT\OWNER:
MONTVALE LAND LLC C/O
LEGGAT MCCALL PROPERTIES, LLC
TEN POST OFFICE SQUARE
BOSTON, MA 02109

PROJECT:
THE VALE
1 HILL STREET
WOBURN, MA

PROJECT NO.	2219-01B	DATE:	04/13/20
SCALE:	1" = 40'	DWG. NAME:	S-2219-01B-EC
DRAFTED BY:	AJR	CHECKED BY:	NIL

PREPARED BY:

ALLEN & MAJOR ASSOCIATES, INC.
civil engineering ◆ land surveying
environmental consulting ◆ landscape architecture
www.allenmajor.com
100 COMMERCE WAY
WOBURN MA 01801-8501
TEL: (781) 935-6889
FAX: (781) 935-2896
WOBURN, MA ◆ LAKEVILLE, MA ◆ MANCHESTER, NH

THIS DRAWING HAS BEEN PREPARED IN DIGITAL FORMAT. CLIENT/CLIENT'S REPRESENTATIVE OR CONSULTANTS MAY BE PROVIDED COPIES OF DRAWINGS AND SPECIFICATIONS FOR HIS/HER INFORMATION AND/OR SPECIFIC USE ON THIS PROJECT. DUE TO THE POTENTIAL THAT THE PROVIDED INFORMATION MAY BE MODIFIED UNINTENTIONALLY OR OTHERWISE, ALLEN & MAJOR ASSOCIATES, INC. MAY REMOVE ALL INDICATION OF THE DOCUMENT'S AUTHORSHIP ON THE DIGITAL MEDIA. PRINTED REPRESENTATIONS OR PORTABLE DOCUMENT FORMAT OF THE DRAWINGS AND SPECIFICATIONS ISSUED SHALL BE THE ONLY RECORD COPIES OF ALLEN & MAJOR ASSOCIATES, INC.'S WORK PRODUCT.

DRAWING TITLE: EXISTING CONDITIONS

SHEET No. V-103

Copyright©2020 Allen & Major Associates, Inc.
All Rights Reserved

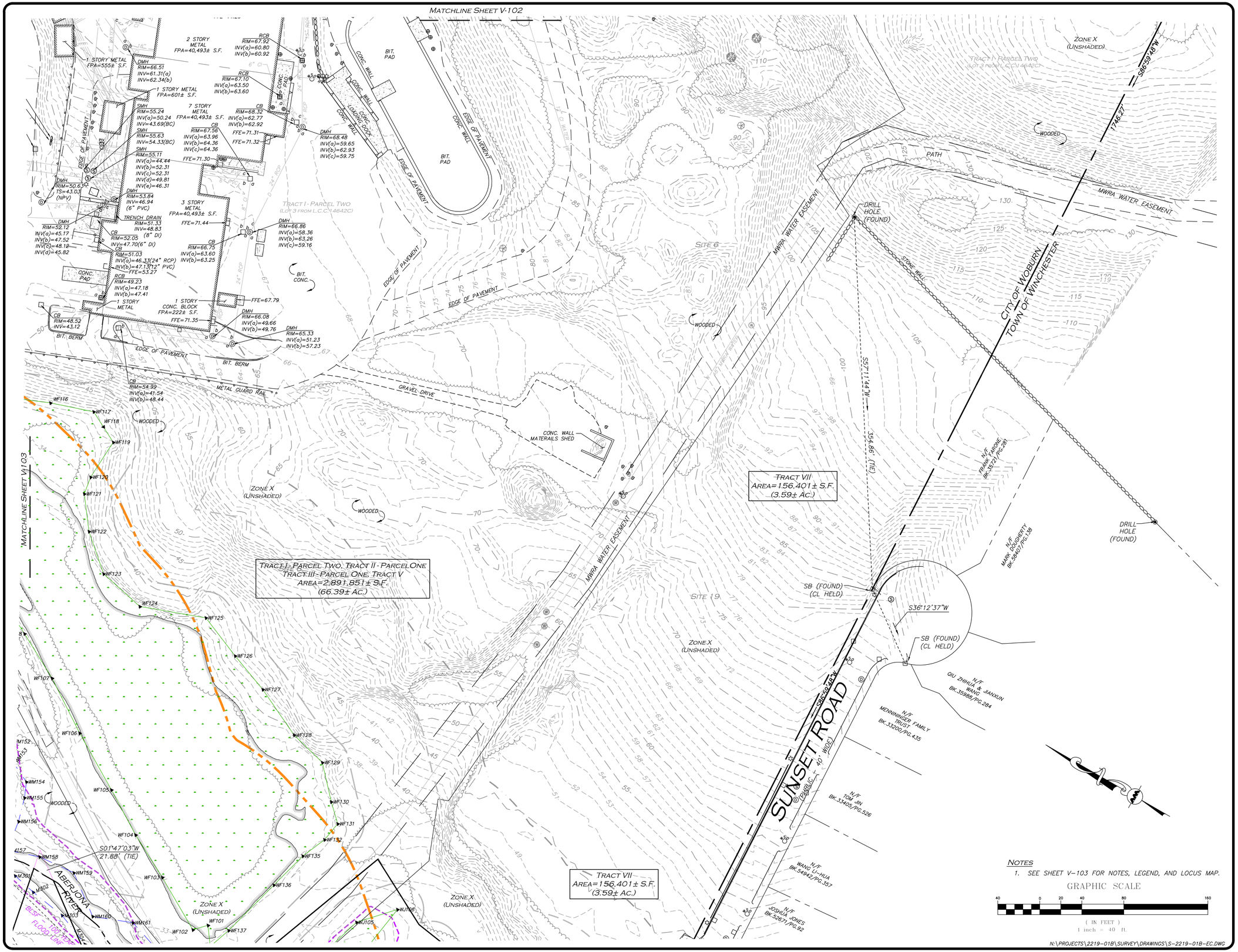

WE HEREBY CERTIFY THAT THIS PLAN IS THE RESULT OF AN ACTUAL ON THE GROUND SURVEY PERFORMED ON OR BETWEEN DECEMBER 30, 2015 AND JANUARY 29, 2020.

APR 14, 2020

PROFESSIONAL LAND SURVEYOR FOR ALLEN & MAJOR ASSOCIATES, INC.

COMMONWEALTH OF MASSACHUSETTS
NORMAN I. LIPSITZ
No. 28446
PROFESSIONAL LAND SURVEYOR

04/14/20

REV	DATE	DESCRIPTION

APPLICANT\OWNER:
MONTVALE LAND LLC C/O
LEGGAT MCCALL PROPERTIES, LLC
TEN POST OFFICE SQUARE
BOSTON, MA 02109

PROJECT:

THE VALE
1 HILL STREET
WOBURN, MA

PROJECT NO.	2219-01B	DATE:	04/13/20
SCALE:	1" = 40'	DWG. NAME:	S-2219-01B-EC
DRAFTED BY:	AJR	CHECKED BY:	NIL

PREPARED BY:

ALLEN & MAJOR ASSOCIATES, INC.
civil engineering ◆ land surveying
environmental consulting ◆ landscape architecture
www.allenmajor.com
100 COMMERCE WAY
WOBURN MA 01801-8501
TEL: (781) 935-6889
FAX: (781) 935-2896
WOBURN, MA ◆ LAKEVILLE, MA ◆ MANCHESTER, NH

THIS DRAWING HAS BEEN PREPARED IN DIGITAL FORMAT. CLIENT/CLIENTS REPRESENTATIVE OR CONSULTANTS MAY BE PROVIDED COPIES OF DRAWINGS AND SPECIFICATIONS FOR HIS/HER INFORMATION AND/OR SPECIFIC USE ON THIS PROJECT. DUE TO THE POTENTIAL THAT THE PROVIDED INFORMATION MAY BE MODIFIED UNINTENTIONALLY OR OTHERWISE, ALLEN & MAJOR ASSOCIATES, INC. MAY REMOVE ALL INDICATION OF THE DOCUMENT'S AUTHORSHIP ON THE DIGITAL MEDIA. PRINTED REPRESENTATIONS OR PORTABLE DOCUMENT FORMAT OF THE DRAWINGS AND SPECIFICATIONS ISSUED SHALL BE THE ONLY RECORD COPIES OF ALLEN & MAJOR ASSOCIATES, INC.'S WORK PRODUCT.

DRAWING TITLE: EXISTING CONDITIONS

SHEET No. V-104

Copyright©2020 Allen & Major Associates, Inc.
All Rights Reserved