# CITY OF WOBURN

# 1985 ZONING ORDINANCES, AS AMENDED

**With Amendments Through**

**August 1, 2019**

**A True Copy Attest:**

_____

**City Clerk**

**SEAL**

# A BRIEF HISTORY OF ZONING IN WOBURN

A Special Meeting of the City Council was convened on Monday, December 22, 1924 by call of Mayor Stephen S. Bean for the purpose of taking action on the Zoning Ordinance. A public hearing was held at that meeting and the matter was referred to a second public hearing. On Friday, January 2, 1925 at 8:15 p.m. a second public hearing was held on the Zoning Ordinance and the matter was passed to be ordained. The Mayor approved the ordinance on Saturday, January 3, 1925 and the ordinance became effective on that date.

The Zoning Ordinance was published as Chapter XXVIII of the Revised Ordinances of 1934 of the City of Woburn.

A substantial revision of the Zoning Ordinance was introduced to the City Council at its regular meeting on May 18, 1961 and set up for a public hearing. The public hearing was held on Monday, June 12, 1961 and the matter was tabled for further study. Several further meetings were conducted during which time the City Council amended several provisions of the original proposal. On July 6, 1961, the City Council voted to revoke Chapter XXVIII of the Revised Ordinances of 1934 and adopted the Revised Zoning Ordinance. On July 10, 1961, the Mayor approved the ordinance and the ordinance became effective on that date.

There was a further re-drafting of the Zoning Ordinance introduced into the City Council on April 9, 1962 and several hearings followed on the revisions during the following weeks. On August 9, 1962, the City Council voted to adopt the revisions to the Zoning Ordinance. The Mayor approved the ordinance on August 20, 1962 and the ordinance became effective on that date.

At a Special Meeting of the City Council on January 22, 1970, a public hearing was held on a further significant revision of the Zoning Ordinance. On April 7, 1970, the City Council adopted a revision of the Zoning Ordinance and repealed the zoning ordinance passed in August 1962. The Mayor approved the ordinance on April 10, 1970 and the ordinance became effective on that date.

On January 2, 1985, a major revision to the Zoning Ordinance was introduced to the City Council. After a series of public hearings, the City Council voted on April 19, 1985 that the proposed Zoning Ordinance be passed to be ordained. The Zoning Ordinance repealed the Zoning Ordinance of 1970. The Zoning Ordinance was approved by the Mayor on April 24, 1985 and became effective on that date.

William C. Campbell
City Clerk

[This page intentionally left blank]

# TABLE OF CONTENTS

A Brief History of Zoning in Woburn ..... i.

Extended Table of Contents ..... v.

Section 1 - Purpose and Application ..... 1-1

Section 2 – Definitions ..... 2-1

Section 3 - Administration, Enforcement and Appeals ..... 3-1

Section 4 - Establishment of Districts ..... 4-1

Section 5 - Use Regulations ..... 5-1

Section 6 - Dimensional Regulations ..... 6-1

Section 7 - Non-Conforming Uses ..... 7-1

Section 8 - Off Street Parking and Loading Facilities Regulations ..... 8-1

Section 9 - Floodway and Flood Plain Districts ..... 9-1

Section 10 - Cluster Development ..... 10-1

Section 11 - Special Permits and Variances ..... 11-1

Section 12 - Site Plan Review ..... 12-1

Section 13 - Sign Regulations ..... 13-1

Section 14 - Townhouse Development in Residential Districts R-1 and R-2 ..... 14-1

Section 15 - Groundwater Protection District ..... 15-1

Section 16 - Illustration Addendum ..... 16-1

Section 17 - Notification of Adoption of Changes of the Woburn Zoning Ordinances ..... 17-1

Section 18 – Development Impact Assessment and Mitigation ..... 18-1

Section 19 – Traffic ..... 19-1

Section 20 – Woburn Loop Bikeway/Greenway Overlay District ..... 20-1

Section 21 – Mishawum Station Transit Oriented Development
Overlay District ..... 21-1

Section 22 – Intergenerational Overlay District (IOD) District ..... 22-1

Section 23 – Commerce Way Corridor Overlay District (CWCOD) ..... 23-1

Section 24 – Wind Energy Facilities ..... 24-1

Section 25 – Upper Main Street Overlay (UMS) District ..... 25-1

Section 26 – Solar Photovoltaic Installations ..... 26-1

Section 27 - Conversion of Houses of Worship ..... 27-1

Section 28 – Technology and Business Mixes Use Overlay District ..... 28-1

Section 29 – Conversion of Significant Historic Building ..... 29-1

Section 30 – Smart Growth Overlay District(s) ..... 30-1

# EXTENDED TABLE OF CONTENTS

SECTION 1 - PURPOSE AND APPLICATION ..... 1-1

1.1 Purpose ..... 1-1
1.2 Application ..... 1-1

SECTION 2 - DEFINITIONS ..... 2-1

SECTION 3 - ADMINISTRATION, ENFORCEMENT AND APPEALS ..... 3-1

3.1 Administration ..... 3-1
3.2 Enforcement ..... 3-2
3.3 Appeals ..... 3-3

SECTION 4 - ESTABLISHMENT OF DISTRICTS ..... 4-1

SECTION 5 - USE REGULATIONS ..... 5-1

5.1 Table of Use Regulations ..... 5-1
Notes to 5.1 Table of Use Regulations ..... 5-10
5.2 Additional Use Regulations ..... 5-15
5.3 Requirements for Fences ..... 5-17
5.4 Requirements for Swimming Pools ..... 5-18
5.5 Earth Removal or Filling ..... 5-18
5.6 Wireless Communication Link/Special Permit Application Requirements and Guidelines ..... 5-20
5.7 Buffer Requirements ..... 5-24
5.8 Marijuana Establishments Forbidden ..... 5-27

SECTION 6 - DIMENSIONAL REGULATIONS ..... 6-1

6.1 Table of Dimensional Regulations ..... 6-2
Footnotes to 6.1 Table of Dimensional Regulations ..... 6-5
6.lA Educational - Residential Facilities an Group Homes ..... 6-6
6.2 Additional Dimensional Regulations ..... 6-6

SECTION 7 - NON-CONFORMING USES ..... 7-1

7.1 Application ..... 7-1
7.2 Purpose ..... 7-2
7.3 Extension or Alteration of Non-conforming Uses ..... 7-2
7.4 Abandonment ..... 7-2

7.5 Change in nonconforming use after permitted use ..... 7-2
7.6 Reconstruction ..... 7-3

SECTION 8 - OFF STREET PARKING AND
LOADING FACILITIES REGULATIONS ..... 8-1

8.1 Applicability ..... 8-1
8.2 Numbers of Required Off-Street Parking Facilities ..... 8-1
8.3 Locations of Required Off Street Parking Facilities ..... 8-3
8.4 Design and Layout of Required Parking Facilities ..... 8-4
8.5 Lighting, Surfacing, and Maintenance ..... 8-5
8.6 Screening and Landscaping ..... 8-6
8.7 Off Street Loading Requirements ..... 8-7

SECTION 9 - FLOODWAY AND FLOOD PLAIN DISTRICTS ..... 9-1

9.1 Purpose ..... 9-1
9.2 Establishment of Districts ..... 9-1
9.3 Application ..... 9-1
9.4 Use Requirements ..... 9-1
9.5 Procedures ..... 9-2
9.6 Conditions for Approval of Special Permit Applications ..... 9-3

SECTION 10 - CLUSTER DEVELOPMENT ..... 10-1

10.1 Purpose ..... 10-1
10.2 Procedures ..... 10-1
10.3 Content of the Application ..... 10-2
10.4 General Requirements ..... 10-2
10.5 Requirements for Open Space ..... 10-3
10.6 Conditions ..... 10-5

SECTION 11 - SPECIAL PERMITS AND VARIANCES ..... 11-1

11.1 Purpose ..... 11-1
11.2 Authority ..... 11-1
11.3 Procedures for Special Permits ..... 11-1
11.4 Contents of the Application for Special Permits ..... 11-3
11.5 Conditions for Special Permits ..... 11-4
11.6 Additional Conditions for Special Permits for
Specific Uses and Conditions ..... 11-6
11.7 Procedures for Variances ..... 11-10
11.8 Standards for Variances ..... 11-10
11.9 No use variance shall be granted ..... 11-10

11.10 List of variances ..... 11-10
11.11 Affordable Housing Requirement ..... 11-11

SECTION 12 - SITE PLAN REVIEW ..... 12-1

12.1 Purpose ..... 12-1
12.2 Requirements ..... 12-1
12.3 Authority ..... 12-1
12.4 Procedures ..... 12-2
12.5 Content of the Application for Site Plan Review ..... 12-5
12.6 Conditions ..... 12-6
12.7 Application Review Fees – Special Municipal Accounts ..... 12-7

SECTION 13 - SIGN REGULATIONS ..... 13-1

13.1 Procedures ..... 13-1
13.2 Signs Permitted in all Districts ..... 13-1
13.3 Signs prohibited in all Districts ..... 13-3
13.4 General Requirements for Signs ..... 13-4
13.5 Non-Conforming Signs ..... 13-5
13.6 Sign Regulations for Residential Districts ..... 13-6
13.7 Sign Regulations in Downtown Business (B-D) and Neighborhood Business (B-N) Districts ..... 13-7
13.8 Sign Regulations for Special Mixed Use Districts (S-1) ..... 13-9
13.9 Sign Regulations for Highway Business Districts (B-H), Interstate Business (B-I) and Industrial Districts ..... 13-11
13.10 Sign Regulations for Office Park (OP), Industrial Park (IP) and Industrial General (IG) Zoning Districts ..... 13-12
13.11 Sign review Board (SRB) for Downtown and Business Neighborhood Zoning Districts ..... 13-15
13.12 Permit Requirements and Sign Review Process for the Downtown Business (B-D) and Business Neighborhood (B-N) Zoning Districts ..... 13-16

SECTION 14 - TOWNHOUSE DEVELOPMENT IN RESIDENTIAL DISTRICTS R-1 AND R-2 ..... 14-1

14.1 Purpose ..... 14-1
14.2 Procedures ..... 14-1
14.3 Content of the Application ..... 14-1
14.4 General Requirements ..... 14-2
14.5 Requirements for Open Space ..... 14-3
14.6 Conditions ..... 14-4

SECTION 15 - GROUNDWATER PROTECTION DISTRICT ..... 15-1

15.1 Purpose..... 15-1
15.2 Scope of Authority..... 15-1
15.3 Definitions ..... 15-1
15.4 Establishment and Delineation of Groundwater Protection District ..... 15-2
15.5 District Boundary Disputes..... 15-2
15.6 Use Regulations..... 15-3
15.7 Procedures for Issuance of Special Permit ..... 15-6
15.8 Severability ..... 15-8

SECTION 16 - ILLUSTRATION ADDENDUM..... 16-1

16.1 Attachment "A" - Lot Width Illustration ..... 16-2
16.2 Form A - Submission Checklist for Special Permit Applications..... 16-3
16.3 Form B - Submission Checklist for Site Plan Applications Requiring a Special Permit..... 16-4
16.4 Form C - Submission Checklist for Site Plan Applications Requiring Planning Board Approvals ..... 16-5

SECTION 17 - NOTIFICATION OF ADOPTION OF CHANGES OF THE WOBURN ZONING ORDINANCES ..... 17-1

SECTION 18 - DEVELOPMENT IMPACT ASSESSMENT AND MITIGATION.... 18-1

18.1 Purpose..... 18-1
18.2 Scope of Study..... 18-1
18.3 Definitions ..... 18-2
18.4 Applicability ..... 18-2
18.5 Development Impact Statement (DIS)..... 18-3
18.6 Report by City Engineer ..... 18-9
18.7 Peer Review..... 18-9
18.8 Performance and Completion of Mitigation Measures..... 18-9
18.9 Severability ..... 18-11

SECTION 19 - Reserved

SECTION 20 –WOBURN LOOP BIKEWAY/GREENWAY OVERLAY DISTRICT

20.1 Purpose of District..... 20-1
20.2 Scope of Authority..... 20-1
20.3 Definitions ..... 20-1
20.4 Allowed Uses ..... 20-2

20.5 Townhouse Requirements ..... 20-2
20.6 Development Impact Mitigation ..... 20-3

SECTION 21 – MISHAWUM STATION TRANSIT ORIENTED DEVELOPMENT OVERLAY DISTRICT

21.1 Purpose of District ..... 21-1
21.2 Scope of Authority ..... 21-1
21.3 Definitions ..... 21-1
21.4 Allowed Uses ..... 21-2
21.5 Requirements for Residential Uses allowed by right in the Mishawum Station Transit Oriented Development Overly District ..... 21-2
21.6 Development Impact Mitigation ..... 21-3

SECTION 22 – INTERGENERATIONAL OVERLAY DISTRICT (IOD) DISTRICT

21.A Purposes and Objectives ..... 22-1
21.B Application ..... 22-1
21.C Associated Criteria ..... 22-1
21.D By Right Uses ..... 22-2
21.E Special Permit Uses ..... 22-2
21.F Dimensional and Density Regulations ..... 22-3
21.G Off-Street Parking Requirements ..... 22-4
21.H Design Standards ..... 22-4

SECTION 23 – COMMERCE WAY CORRIDOR OVERLAY DISTRICT (CWCOD)

23.1 Purposes of District ..... 23-1
23.2 Establishment and Applicability ..... 23-1
23.3 Project Review Procedures ..... 23-2
23.4 Application for Site Plan Approval or Special Permit; Initial Project Construction ..... 23-6
23.5 Permitted Uses ..... 23-7
23.6 Re-tenanting After Initial Construction ..... 23-12
23.7 Dimensional Regulations ..... 23-12
23.8 Off-Street Parking Requirements ..... 23-13
23.9 Signs ..... 23-17
23.10 Utilities and Easements ..... 23-17
23.11 Development Impact Mitigation ..... 23-18

SECTION 24 – WIND ENERGY FACILITIES

24.1 Purpose and Intent ..... 24-1
24.2 Wind Monitoring or Meteorological (“test” or “met”) Tower ..... 24-1

24.3 Roof Top Wind Energy Facility ..... 24-2
24.4 Small Wind Energy Facility ..... 24-4
24.5 Large Wind Energy Facility ..... 24-10

SECTION 25 – UPPER MAIN STREET OVERLAY (UMS) DISTRICT ..... 25-1

25.A Purpose of District ..... 25-1
25.B Scope of Authority ..... 25-1
25.C Associated Criteria ..... 25-1
25.D By Right Uses ..... 25-1
25.E Special Permit Uses ..... 25-2
25.F Dimensional and Density Regulations ..... 25-2
25.G Off-Street Parking Requirements ..... 25-2

SECTION 26 – SOLAR PHOTOVOLTAIC INSTALLATIONS ..... 26-1

26.1 Purpose ..... 26-1
26.2 Applicability ..... 26-1
26.3 General Requirements for all Solar Photovoltaic Installations ..... 26-1
26.4 Use Regulations ..... 26-2
26.5 Dimensional and Density Requirements ..... 26-3
26.5.5 Appurtenant Structures ..... 26-3
26.6 Solar Photovoltaic Installation Site Plan Review and Special Permit ..... 26-3
26.7 Application and Plan Requirements ..... 26-4
26.8 Design Standards ..... 26-5
26.9 Safety and Environmental Standards ..... 26-6
26.10 Monitoring and Maintenance ..... 26-6
26.11 Abandonment or Decommissioning ..... 26-7

SECTION 27 – CONVERSION OF HOUSES OF WORSHIP ..... 27-1

27.1 Purpose of District ..... 27-1
27.2 Scope of Authority ..... 27-1
27.3 Uses By Right ..... 27-1
27.4 Uses by Special Permit ..... 27-1
27.5 Dimensional and Density Regulations ..... 27-2
27.6 Off-Street Parking Requirements ..... 27-2
27.7 Required Additional Findings for Conversion of Houses of Worship ..... 27-2

SECTION 28 – TECHNOLOGY AND BUSINESS MIXED USE
OVERLAY DISTRICT ..... 28-1

28.1 Purpose and Objectives of District ..... 28-1
28.2 Establishment and Applicability ..... 28-1

28.3 Authority of Permit Granting Authority ..... 28-2
28.4 Master Concept Plan ..... 28-2
28.5 Exclusivity/Control ..... 28-4
28.6 Uses ..... 28-4
28.7 Density and Dimensional Regulations ..... 28-7
28.8 Off-Street Parking Requirements ..... 28-8
28.9 Design Standards ..... 28-8
28.10 Sign Regulations ..... 28-8
28.11 Permitting Requirements ..... 28-9
28.12 Application Requirements ..... 28-10
28.13 Plan Content Requirements ..... 28-11
28.14 Procedures for Approval ..... 28-12
28.15 Validity of Decision ..... 28-14

SECTION 29 – CONVERISON OF SIGNIFICANT HISTORIC BUILDING ..... 29-1

29.1 Purpose of District ..... 29-1
29.2 Scope of Authority ..... 29-1
29.3 Uses Allowed by Right ..... 29-2
29.4 Uses Allowed by Special Permit ..... 29-2
29.5 Dimensional and Density Regulations ..... 29-2
29.6 Off-Street Parking Requirements ..... 29-4
29.7 Conditions ..... 29-4
29.8 Required Additional Findings for Conversion of Significant Historic Buildings ..... 29-5
29.9 Procedure ..... 29-5
29.10 Application Requirements ..... 29-6
29.11 Plan Content Requirements ..... 29-7

SECTION 30 – SMART GROWTH OVERLAY DISTRICT(S) ..... 30-1

30.1 General Regulations that apply to all Smart Growth Overlay Districts ..... 30-1
30.1.1 Purposes ..... 30-1
30.1.2 Definitions ..... 30-2
30.1.3 Scope and Authority ..... 30-14
30.1.4 Administration, Enforcement and Appeals ..... 30-15
30.1.5 Off-Street Parking and Loading ..... 30-15
30.1.6 Open Spaces and Recreational Areas ..... 30-18
30.1.7 Affordable Housing ..... 30-19
30.1.8 Signage Regulations ..... 30-23
30.1.9 Additional Use Regulations ..... 30-25
30.1.10 Development Impact Mitigation ..... 30-26
30.1.11 Plan Approval Procedures ..... 30-34
30.1.12 Waivers ..... 30-37

30.1.13 Plan Changes After Approval by City Council ..... 30-38
30.1.14 Fair Housing Requirement ..... 30-38
30.1.15 Project Phasing ..... 30-38
30.1.16 Decisions ..... 30-39
30.1.17 Date of Effect ..... 30-39
30.1.18 Severability ..... 30-39
30.1.19 Design Standards..... 30-39
30.2 Establishment and Delineation of the Smart Growth Overlay Districts.30-40
30.2.1 Woburn Mall Smart Growth Overlay District (WM-SGOD) ..... 30-40
30.2.1.1 Establishment and Delineation of the WM-SGOD..... 30-40
30.2.1.2 Allowed and Prohibited Uses ..... 30-40
30.2.1.3 Dimensional and Other Requirements ..... 30-42
30.2.1.4 Parking Ratio ..... 30-42
30.2.1.5 Density Allowances/Multi-Family Residential ..... 30-43
30.2.1.6 Age-Restricted Housing Units ..... 30-43
30.2.1.7 Rooftop Dining ..... 30-44
30.2.1.8 Permitted Signage..... 30-45

**********

# SECTION 1

# PURPOSE AND APPLICATION

## 1.1 Purpose

This Zoning Ordinance, enacted by a two-thirds vote of the City Council of the City of Woburn, provides for the division of the City into districts, regulating the use of land and construction of structures therein. This zoning ordinance incorporates the purposes and objectives set forth in Chapter 808, Section 2A of the Acts of 1975, which include but are not limited to the following:

1. To lessen congestion in the streets;
2. To conserve health;
3. To secure safety from fire, flood, panic and other dangers;
4. To provide adequate light and air;
5. To prevent overcrowding of land;
6. To avoid undue concentration of population;
7. To encourage housing for persons of all income levels;
8. To facilitate the adequate provision of transportation, water, water supply, drainage, sewerage, schools, parks, open space and other public requirements;
9. To conserve the value of land and buildings, including the conservation of natural resources and the prevention of blight and pollution of the environment;
10. To encourage the most appropriate use of land throughout the city or town, including consideration of the recommendations of the master plan, if any, adopted by the planning board and the comprehensive plan, if any, of the regional planning agency; and
11. To preserve and increase amenities by the promulgation of regulations to fulfill said objectives.

The City of Woburn, acting through its City Council, adopts these purposes in order to promote the health, safety and welfare of the inhabitants of the City of Woburn and the public at large.

## 1.2 Application

1. No use of land or use of buildings or structures not specified in this zoning ordinance shall be permitted. (Former 1.2.2 deleted 11/17/92).

2. Nothing in this ordinance shall prohibit, regulate or restrict the use of land or structures in any district for religious purposes or for educational purposes on land owned or leased by the Commonwealth or any of its agencies, subdivisions or

bodies politic or by a religious sect or denomination, or by a nonprofit educational corporation, except as provided in Section 3 of Chapter 40A of the General Laws of Massachusetts.

**********

# SECTION 2

# DEFINITIONS

For the purpose of this ordinance, certain terms and words shall have the following meanings. Words used in the present tense include the future; the singular number includes the plural; the plural the singular. Terms and words not defined herein but defined in the Massachusetts State Building Code shall have the meaning given therein. Words defined in neither place shall have the meaning given in Webster's Unabridged Dictionary, Latest Edition.

ABANDONMENT: The visible or otherwise apparent intention of an owner to discontinue a non-conforming use of a building or premises, or the removal of the characteristic equipment or furnishing used in the performance of the non-conforming use, without its replacement by similar equipment or furnishings, or the replacement of the non-conforming use or building by a conforming use or building.

ACCESSORY USE: The use of a structure or lot for the purpose incidental to a principal use permitted as a right or by Special Permit, customarily found in connection therewith, located on the same lot as the principal use, and which does not in effect constitute conversion of the principal use of the structure or lot to one not permitted.

ACCESSORY USES, IN CONJUNCTION WITH SCIENTIFIC RESEARCH: Activities accessory to activities otherwise permitted within the district as a matter of right, which activities are necessary in connection with scientific research or scientific development or related production, whether or not on the same parcel as activities permitted as a matter of right.

ADULT BOOKSTORE: An establishment having as a substantial or significant portion of its stock in trade, books, magazines, and other matter which are distinguished or characterized by their emphasis depicting, describing, or relating to sexual conduct or sexual excitement as defined in MGL Ch. 272, Sec. 31 as amended. For purposes here, "substantial or significant portion of stock" shall mean more than twenty-five percent (25%) of the subject establishment's inventory stock or more than twenty-five percent (25%) of the subject premise's gross floor area. (added 9/3/96)

ADULT CABARET: A nightclub, bar, restaurant, tavern, dance hall, or similar commercial establishment which regularly features:

a. persons who appear in a state of nudity; or
b. live performances which are characterized by an emphasis depicting anatomical areas specified as less than completely and opaquely covered human genitals,

pubic regions, buttock and female breast below a point immediately above the top of the areola, and human genitals in a state of sexual arousal, or relating to sexual conduct or sexual excitement as defined in MGL Ch. 272, Sec. 31; or

c. films, motion pictures, video cassettes, slides, or other photographic reproductions which are characterized by the depiction or description of anatomical area specified as above, or relating to sexual excitement as defined in MGL Ch. 272, Sec. 31. (added 9/3/96)

ADULT DAY CARE CENTER: A nonresidential facility in which custodial care is provided for more than five persons older than eighteen years of age, related or unrelated, who are in need of supervision and/or assistance with routine daily functions but who are not in need of regular medical attention, where the adults are receiving said care on a regular and recurring basis during a part of the 12 hour period between 7:00 a.m. and 7:00 p.m., for not less than three and not more than 12 hours. Such a facility shall comply with all state and local codes and/or ordinances regarding zoning, building, fire, health and housing. (added 9/8/2016)

ADULT MOTION PICTURE THEATER: An enclosed building used for presenting material (motion picture films, video cassettes, cable television, slides or any other such visual media) distinguished by an emphasis on matter depicting, describing or relating to sexual conduct or sexual excitement as defined in MGL Ch. 272, Sec. 31. (added 9/3/96)

ADULT PARAPHERNALIA STORE: An establishment having as a substantial or significant portion of its stock devices, objects, tools or toys which are distinguished or characterized by their association with sexual activity, including sexual intercourse, sexual conduct or sexual excitement as defined in MGL Ch. 272, Sec. 31. (added 9/3/96)

ADULT VIDEO STORE: An establishment having as a substantial or significant portion of its stock in trade -- for sale or rent-- motion picture films, video cassettes and similar audio/visual media, which are distinguished or characterized by their emphasis depicting, describing or relating to sexual conduct or sexual excitement as defined in MGL Ch. 272, Sec. 31, as amended. For purposes herein, "substantial or significant portion of stock" shall mean more than twenty-five percent (25%) of the subject establishment's inventory stock or more than twenty-five percent (25%) of the subject premise's gross floor area. (added 9/3/96)

ADVANCED MANUFACTURING: Production activities that integrate technology-based systems and processes in the manufacture of products to the highest level of quality and compliance with industry-specific certification standards. Products are often innovative, made from advanced materials and components, and produced on technology-driven equipment and/or with technology-driven processes. Raw material development is typically carbon footprint friendly and brought to market in the most technologically-advanced way; the final product has very little if any waste due to the reuse or recyclable potential of the product. Examples of advanced manufacturing include nanotechnology;

computer aided design (CAD), reverse engineering, enhanced prototyping and simulations; computer integrated manufacturing; and production that employs computer numerically controlled (CNC) equipment, robotics, laser, plasma, waterjet and other automated equipment. (added 9/8/2016)

AGRICULTURE: The use of land for production of crops, including horticulture, floraculture and vitaculture, but excluding raising of livestock for commercial purposes and excluding any other uses such as would create unduly offensive and noxious odors.

ALLEY: A way which is thirty (30) feet or less in right-of-way width and is used primarily for secondary vehicular service access to the back of a lot or lots which also abut on a street.

ALTERATION: Any construction resulting in a change in the structural parts or heights, number of stories, size, use, or location of a building or other structure.

ASSISTED LIVING: Residents require significant personal care/assistance with Activities of Daily Living (ADLs) such as bathing, dressing/undressing, using the restroom, eating, walking/wheeling, medication management, etc. [Added 9/4/2008]

ASSISTED LIVING /CONTINUING CARE: Non-profit and for profit residential developments providing housing for able bodied senior citizens and/ or housing with various degrees of medical and life support services to people over the age of 62years of age. (added 9/23/2009)

AUTOMATIC TELLER MACHINE (ATM), FREESTANDING: A pedestrian-oriented mechanical device, not in proximity to a bank or other financial institution, which is accessed by an individual for the purpose of receiving cash from accounts and/or allows patrons to transact minor financial activities. ATMs for use by patrons in vehicles are to be considered drive-up customer service facilities. (added 7/28/2003)

BASEMENT: A portion of a building, partly underground, which has more than one-half of its height measured from finished floor to finished ceiling above the average grade of the adjoining ground. A basement is not deemed a story unless its ceiling if 6 ft. 6 in. or more above the finished grade.

BIOMEDICAL FACILITY: Any facility engaged in the use of materials such as (but not limited to) Recombinant DNA, live animals for testing, the use of potentially infectious cell lines, or infectious material, including biomedical facilities defined by the National Institute of Health as a Biolevel-1 (BL-1) or Biolevel-2 (BL-2) facility. (added 5/26/2009; amended 9/8/2016)

BOARD: The Board of Appeals of the City of Woburn, Massachusetts.

BOARDING, ROOMING OR LODGING HOUSE: A building or structure or portion thereof arranged or used for lodging with or without meals for compensation by three (3) or more lodgers or boarders. This definition shall not include Hotels, Motels or Inns.

BODY ART - means the practice of physical body adornment by permitted establishments and practitioners using, but not limited to, the following techniques: body piercing, tattooing, cosmetic tattooing, branding, and scarification. This definition does not include practices that are considered medical procedures by the Board of Registration in Medicine, such as implants under the skin, which are prohibited. This definition shall not include the piercing of ear lobes

BODY ART ESTABLISHMENT - or establishment means a location, place, or business that has been granted a permit by the Woburn Board of Health, whether public or private, where the practices of body art are performed, whether or not for profit.

BODY ART PRACTITIONER - or practitioner means a specifically identified individual who has been granted a permit by the Woburn Board of Health to perform body art in an establishment that has been granted a permit by the Board.

BUFFER ZONE: An area along the boundary line between a residential district in the City of Woburn and a mixed-use, business, office park or industrial district, extending into the aforementioned non-residential districts, except as provided for in Section 6.2.6.4 of this ordinance, which is limited in use, as provided in Section 6.2.6.5, and is subject to special requirements as provided in Section 6.2.6.6 in order to reduce adverse development impacts on neighboring residential districts.

BUILDING: An independent structure resting on its foundations and designed for the shelter or housing of persons, animals, chattels, or property of any kind.

BUILDING GROUND COVERAGE: The percentage of total lot area covered by buildings.

BUILDING COMMISSIONER, also known as the COMMISSIONER OF BUILDINGS: The Commissioner of buildings of City of Woburn, charged with the enforcement of this zoning ordinance.

BUSINESS OR TRADE SCHOOL: A school providing education in dance, art, music, business, trade or similar subjects.

BUSINESS SALES OR SERVICES: A commercial enterprise that sells only to and services other business. (added 9/23/2009)

CANOPY SIGN: A sign located at a drive-up customer facility affixed directly to the canopy within the stacking or transaction area of the drive-up customer facility. Canopy signs shall be limited to directional, informational, company name, and/or logo. (added 8/22/2006)

CELLAR: A portion of a building, partly underground, which has less than one-half of its height measured from finished floor to finished ceiling above the average grade of the adjoining ground. A cellar is not deemed a story.

CEMETERY: An area set apart for or containing graves, tombs, crypt or funeral urns; a burial ground/graveyard. (added 6/2/92)

CHECK CASHING FACILITY: Any business as defined in Massachusetts General Laws Chapter 169A that cashes checks for a fee, excluding financial institutions. (added 7/28/2003)

CHILD CARE CENTER: Any facility for the commercial day care of four or more children.

CITY COUNCIL: City Council of the City of Woburn.

CLUSTER DEVELOPMENT: A residential development in which the buildings and accessory uses are clustered together into one or more groups separated from adjacent property by open land, and in which provision has been made by conveyance or restriction that the land be kept in an open or natural state.

COMMERCIAL PARKING LOT: Any open air parking lot or parking garage used in whole or in part for parking fifty (50) or more motor vehicles and where a fee/payment for parking is charged to individuals, businesses or organizations. A license is required under Woburn's Municipal Code Section 5-87 and 5-88 for all commercial parking lots of three (3) or more parking spaces. (Added 4/25/2007)

COMMUNITY CENTER: Recreation-oriented center or facility such as drop-in center, or recreation facilities open to a broad public, and excluding private membership clubs, to include club houses or community centers associated with multi-family developments. (amended 9/23/2009)

CONGREGATE ELDERLY APARTMENTS: A dwelling which contains three or more dwelling units arranged, intended or designed to create a residential environment for the elderly which includes services such as meals, housekeeping, transportation and organized recreation programs. It is neither a care home or medical facility, but a facility commonly known as "congregate housing".

CONSERVATION COMMISSION: Conservation Commission of the City of Woburn.

DEPOT: A warehouse. (added 11/20/90).

DIAGNOSTIC IMAGING TRAILER: A trailer offering diagnostic imaging services to patients and/or animals. The imaging modalities may include, MRI (Magnetic Resonance Imaging), CT (Computerized Tomography), PET (Positron Emission Tomography),

PET/CT (Positron Emission Tomography/Computerized Tomography), Digital Mammography, and Veterinary Medicine-MRI and any other generally recognized imaging methods. (added 4/8/2004)

DRIVE-UP CUSTOMER SERVICE FACILITY: A fast food restaurant, bank, retail, commercial, or service use which allows customers to access sales or services directly from a motor vehicle or where the customer drives a motor vehicle onto the premises and to a window or mechanical device through or by which the customer is serviced without exiting the vehicle. This shall not include the selling of fuel at a gasoline station, self service gasoline station, or the accessory functions of a car wash facility such as vacuum cleaning stations. (added 7/28/2003)

DRIVEWAY: An open space, located on a private lot, providing for access to a private garage or off-street parking space.

DWELLING: Any structure used in whole or in part for human habitation, exclusive of a trailer or mobile home, however mounted.

DWELLING, SINGLE FAMILY: A dwelling containing a single dwelling unit.

DWELLING, TWO FAMILY: A dwelling containing two dwelling units.

DWELLING UNIT: One (1) or more rooms arranged, intended or designed to be occupied by one (1) family and to provide complete facilities for living, sleeping and eating.

DWELLING, MULTI-FAMILY: A dwelling which contains three or more dwelling units attached or located in a single structure.

ELEVATION: Height relative to mean sea level.

ELEVATOR APARTMENTS: A multi-family dwelling having more than two and one-half (2½) stories or thirty-five (35) feet in height, except in the Business Downtown (B-D) zoning district, whereby a structure having more than three (3) stories and containing multi-family dwelling units above the first floor of a commercial use(s), shall be classified as an elevator apartment. (Added 2/14/2001)

ERECTED: The word erected shall include the word attached, built, constructed, reconstructed, altered, enlarged, moved, painted and posted.

ESSENTIAL SERVICES: The erection, construction, alteration, or maintenance, by public utilities or government agencies, of underground or overhead gas, electrical, steam, or water transmission or distribution systems, collection, communication, supply or disposal system, including poles, wires, mains, drains, sewers, pipes, conduits, cables, fire alarm

boxes, police call boxes, traffic signals, hydrants, and other similar equipment and accessories in connection therewith, but not including buildings necessary for the furnishing of adequate service by such public utilities or governmental agencies for the public health or safety or general welfare.

FAMILY: One or more persons, including domestic employees, occupying a dwelling unit and living as a single, non-profit housekeeping unit, except that six (6) or more persons who are not within the second degree of kinship to each other, as defined by the law of the Commonwealth of Massachusetts, shall not constitute a family.

FINANCIAL INSTITUTION**:** A state or federally chartered bank, savings association, credit union, or industrial land company located in a building or portion thereof which provides for the custody, loan, exchange, or issue of money, the extension of credit, or facilitating the transmission of funds, and which may include accessory drive-up customer service facilities on the same premises**.** This does not include small loan businesses or check cashing facilities. (added 7/28/2003)

FLOOR AREA, GROSS: The sum of all areas of a building within the inside perimeter of the exterior faces of the walls. It includes all floors of a building, basements, cellars, attics, penthouses, unenclosed and closed-in porches, closets, ramps, floor space in accessory buildings or in the main building intended and designed for the parking of motor vehicles in order to meet the parking requirements of this Ordinance, and any floor space intended and designated for the operation and maintenance of the building, i.e., heating, air conditioning, ventilation, mechanical and electrical equipment, elevator machinery, elevator shafts, corridors, hallways, columns and stairwells. The floor area of a building, or portion thereof, not provided with surrounding exterior walls shall be the usable area under the horizontal projection of the roof or floor above. (Amended 8/11/92; 11/21/2018)

FLOOR AREA, NET: The sum of all the floors of a building used for human occupancy, including basements, cellars attics, and floor area of interior courts designed for human occupancy and used for such purpose, and as measured from the interior faces of the walls. It does not include cellars, basements, attics and unenclosed and closed-in porches not designed and/or used for human occupancy, closets, ramps, or any floor intended and designed for the parking of motor vehicles in order to meet the parking requirements of this ordinance, or any floor space intended and designated for operation and maintenance of the building such as heating, ventilation, air conditioning, mechanical and electrical equipment, elevator machinery, elevator shafts, corridors, hallways, columns and stairwells. (Amended 8/11/92; 11/21/2018)

FLOOR AREA RATIO (FAR): The ratio of the net floor area of the structure to the lot area. (Amended 9/22/92).

FRONTAGE: The length of continuous linear feet of a lot which runs along a street. See also "LOT LINE FRONT".

GARDEN APARTMENT: A dwelling, not more than two and one half stories or thirty five (35) ft. in height, containing three or more dwelling units.

GARAGE: A structure for the storage of motor vehicles.

GARAGE, AUTOMOBILE AND TRUCK REPAIR: An establishment for the storage, repair, rental, servicing, adjusting and/or equipping of automobiles or other motor vehicles, body works and/or supplying fuel and oil to motor vehicles, but excluding repair of heavy motorized equipment and dismantling and storage of vehicles and parts.

GASOLINE STATION: An establishment which provides for the sale of gasoline and accessory items, servicing and minor repairs of motor vehicles.

GOLF COURSE-COUNTRY CLUB: Establishments consisting of golf courses and related facilities, usually known as "country clubs", consisting of restaurants, function rooms, accessory buildings, tennis courts, and other recreational facilities.

GOLF DRIVING RANGE: A facility used for the instruction and practice of the game of golf by striking golf balls from fixed locations into an open field together with incidental uses thereto including but not limited to golf putting greens and rental of equipment. Each golf driving range shall be constructed according to nationally recognized safe practice standards for such amusements to protect patrons, passers-by and the surrounding area. Sufficient off-street parking for patrons shall be furnished and maintained. The premises shall be maintained in an orderly manner and grass and weeds kept down. (Added 5/8/2001)

GRADE: The rate of change in elevation of the surface of the land as measured in feet of vertical change per one hundred (100) feet horizontal, or percent. (One foot vertical change per one hundred feet horizontal is equal to a one percent (1%) grade).

HEIGHT OF A BUILDING: The vertical distance measured from the average ground elevation around the exterior walls of the building, determined without regard to any attached accessory building or attached parking structure, or the underside of the floor slab of the building above any parking facilities contained within the structure, to the highest point of the roof surface in the case of a flat roof, and to the mean height between eaves and ridge in the case of a pitched roof except that the measurement of height shall not include appurtenant roof structures such as chimneys, service equipment and penthouses or spires, smokestacks, flag poles, aerials, roof-mounted energy systems, and the like, nor shall it include any parking facilities contained within the building. (Amended 3/29/2016)

HOME OCCUPATION OR OFFICE: The use of a portion of a dwelling as an office, studio, or workroom for occupation at home by a person residing on the premises and in connection with which there is kept no stock in trade nor commodity sold on the premises and which

- is clearly incidental to and secondary to the use as a residence;
- is a customary home occupation such as dressmaking, millinery, or preparing food for sale; or
- is an office of a resident physician, dentist, attorney at law, architect, engineer, real estate broker, insurance broker, teacher of not more than three (3) students, or member of other recognized professions;
- shall have no exterior evidence of the home occupation or display or storage of materials other than permitted by this ordinance, i.e., signs as permitted in Sec. 13.6. (Amended 10/20/92).
- provided the equipment, facilities or conduct associated with the home occupation do not create undue or harmful noise, smoke, dust, odor, vibration, electrical interference, customer traffic, or unsightliness discernable from adjacent properties or such other interferences with the peaceable enjoyment of neighboring residents.

HOSPITAL :

EXTENDED CARE FACILITY: a building used primarily for the long term residence of persons who, on account of (1) age or (2) physical infirmity, are unable to live by, or care for, themselves; included within this term are facilities which are commonly known as nursing homes, convalescent homes and rest homes and Assisted Living residences. (amended 12/19/2013)

GENERAL HOSPITAL: a facility or building used primarily for providing to members of the public, or members of designated groups of the public, medical care and services of every kind, nature or description, excepting those services hereinafter described and listed within the definition of:

SPECIAL HOSPITAL: a facility or building used primarily for providing to members of the public, or members of designated groups or the public, either as residents of, or as periodic visitors thereto, psychiatric, psychological, mental health or emotional care, counseling and/or treatment; including herein, a facility or building which is used for the care, counseling and/or treatment of persons suffering from substance abuse, including drugs and/or alcohol. (added 2/6/90)

HOTEL COMPLEX**:** A hotel development with related commercial or office uses where the hotel component is at least 50% of the gross building area of the initial construction project. (added 9/23/2009)

HOTEL OR INN: A business activity where rooms for temporary lodging are rented on a nightly or longer basis and whose facilities may or may not include restaurants, pools, recreation amenities, conference and meeting rooms and similar types of accessory uses. Further a Hotel or Inn shall be a business activity where at least 90% of the lodging rooms are accessed from internal hallways. (amended 9/23/2009)

HOUSE OF WORSHIP: A building which was built and used for the primary purpose of assembly for religious worship. For purposes of this ordinance the term “house of worship” shall not include any other building, structure, or use now or formerly associated with religious practice such as, but not limited to, convents, rectories, schools and cemeteries. (added 1/22/2015)

KENNEL: Premises maintained for breeding, boarding, sale or training of dogs for hunting or other purposes and including any shop where dogs are on sale, and also including premises where more than three (3) dogs three months old or over are owned or kept irrespective of the purpose for which they are maintained.

LANDSCAPING: The planting and maintenance of live plants including trees, shrubs, ground cover, flowers, or other low-growing plants that are native or adaptable to the climactic conditions of the area. In addition, the term landscape may include some natural or manufactured materials including, but not limited to, reflecting pools, works of art, walkways, screens, walls, fences, benches and other types of street furniture.

Landscaping material may also include, but is not limited to, other non-living durable materials such as rocks, pebbles, sand, brick pavers, and earthen mounds, but excluding pavement for vehicular use.

LARGE WIND ENERGY FACILITY: All equipment, machinery and structures utilized in connection with the conversion of wind to electricity except small wind energy facilities and roof top wind energy facilities. This includes, but is not limited to, transmission, storage, collection and supply equipment, substations, transformers, service and access roads, and one or more wind turbines. (Added 11/24/2009)

LEGAL STREET FRONTAGE: The length of continuous linear feet of a lot which runs along a street or a way shown on a plan approved by the Planning Board under the Subdivision Control Law, or a private way in existence when the subdivision law became effective in the city which, in the opinion of the Planning Board, has sufficient width, suitable grades and adequate construction to provide for the needs of vehicular traffic and the installation of municipal services. On a corner lot, the shorter street frontage shall be considered the legal street frontage unless otherwise specified by deed restriction. (Added 8/24/2000)

LOT: A single area of land in one ownership with definite boundaries, ascertainable by deed or recorded plan.

LOT AREA: Lot area shall be determined by an area within a lot including any area within said lot over which easements have been granted, provided that no area within a street shall be included in determining minimum lot area. (amended 12/5/89).

LOT, CORNER: A lot at the junction of and fronting on two (2) or more intersecting streets.

LOT, INTERIOR: A lot, other than a corner lot, with only one (1) frontage on a street.

LOT LINE: A line which separates one (1) or more lots or a lot and a street.

a) LOT LINE, FRONT: The lines separating a lot from the right-of-way of a street. On a corner lot, the shorter street frontage shall be considered the front lot line unless otherwise specified by deed restriction.
b) LOT LINE, REAR: Any lot line which is not a front or side lot line.
c) LOT LINE, SIDE: Any line which separates a lot from another lot and which intersects a front lot line or which, if extended to a front lot line or its extension, would form an angle of greater than 45 degrees with the front lot line when measured on the side of the angle closest to the center of the lot.

LOT, THROUGH: A lot, other than a corner lot, the front and rear lot lines of which abut streets.

LOT, WIDTH, MINIMUM: No lot shall be created which does not have an area in which a circle may be located tangent to the lot frontage and within all lot lines - the lot must also allow the passage of said circle from its frontage position to the developable portion while remaining within all lot lines. The circle diameter shall not be less than the minimum dimension for the appropriate district as listed in Section 6.1 Dimensional Table column labeled LOT WIDTH . An illustration depicting the foregoing definition for lot width can be found in the Addendum section of this ordinance, as Attachment "A". (added 5/6/97)

MANUFACTURING: Fabrication, processing, packaging, or assembly operation, predominantly from previously prepared materials, to produce durable and/or non-durable finished goods or component parts, free from agents disturbing to the neighborhood, such as odors, gas fumes, smoke, cinders, flashing or excessively bright lights, refuse matter, electro-magnetic radiation, heat, vibration or other adverse environmental effect, provided there is no outside storage of materials or finished goods, unless authorized by Section 5.1.60, Table of Use Regulations, but excluding heavy industrial operations such as asphalt, block, concrete, steel or fertilizer manufacturing, heavy forging processes, scrap metal processing, garbage and refuse incineration or the disposal of other material not originating on the premises, except as produced by the City of Woburn. All manufacturing shall be in compliance with Title 9, section 9-2, Noise Control, of the Woburn Municipal Code. (Amended 11/4/2014)

MANUFACTURING, LIGHT: Manufacturing as defined above, employing only electric or other generally noiseless and inoffensive motor power, utilizing hand labor or quiet machinery and processes. (Amended 11/4/2014)

MANUFACTURING, HEAVY: Manufacturing other than light manufacturing. (Amended 11/4/2014)

MASSAGE THERAPIST: Any person who has a certificate of Massage Therapy that has been recognized by the Board of Health and who has conformed to all other requirements deemed necessary by the Board of Health. (added 6/7/94)

MARIJUANA ACCESSORIES: equipment, products, devices or materials of any kind that are intended or designed for use in planting, propagating, cultivating, growing, harvesting, manufacturing, compounding, converting, producing, processing, preparing, testing, analyzing, packaging, repackaging, storing, containing, ingesting, inhaling or otherwise introducing marijuana into the human body. (added 3/21/2017)

MARIJUANA ESTABLISHMENT: a marijuana cultivator, marijuana testing facility, marijuana product manufacturer, marijuana retailer or any other type of licensed marijuana-related business that is not a Medical Marijuana Treatment Center. (added 3/21/2017)

MEDICAL MARIJUANA TREATMENT CENTER: A building or structure used by a not for profit entity licensed by the Massachusetts Department of Public Health pursuant to 105 C.M.R. 725.000 that acquires, cultivates, possesses, processes (including development of related products such as marijuana infused food, tinctures, aerosols, oils, or ointments), transfers, transports, sells, distributes, dispenses, or administers marijuana or products containing marijuana and/or related supplies, for medical purposes. (added 7/16/2015)

MENU BOARD/ORDER BOARD: A sign incorporated into a drive-up customer service facility where products or services are offered directly to the occupant of the vehicle. A menu/order board shall identify only the products or services available at the drive-up customer facility. (added 8/22/2006)

MIXED USE HOTEL/RESTAURANT: A mix of hotel and restaurant uses in one building or in separate buildings on one development lot. (added 10/9/2014)

MIXED USE RETAIL: A mix of retail, office, research or other permitted business and commercial activities in one building or in separate buildings on one development lot. (added 9/23/2009)

MIXED USE RESIDENTIAL: A mix of retail, office and multi-family use in one building or in separate buildings on one development lot. (added 9/23/2009)

MOBILE HOME: Any structure or object which is drawn by or used in connection with a motor vehicle and which is so designed and constructed or reconstructed or added to by means of accessories as to permit the use and occupancy thereof for human habitation, whether resting on wheels, jacks or other bases. It shall include the type of object containing complete electrical, plumbing and sanitary facilities and designed to be installed on a temporary or permanent foundation for permanent living quarters. This facility shall be used as a temporary facility only, as spelled out in Sec. 5.1, Table of Use Regulations.

MULTI-FAMILY: TBD (added 9/23/2009)

MUNICIPAL USE: Use of land and structures by the city of Woburn for public administrative, health and safety services, maintenance operations of public roadways, easements and utilities, and other public services as required by MGL. Said uses of land and structures shall include, but not be limited to, public administrative buildings, police and fire stations, public maintenance facilities, sewer and water stations, public utilities, roadways, easements and conservation lands. (Added 11/17/92)

MUSCULAR THERAPY: Any establishment created for the purpose of providing Massage Therapy by duly licensed Massage Therapists. (Added 6/7/94)

NACELLE: The frame and housing at the top of the wind turbine tower that encloses the gearbox and generator and protects them from the weather. (Added 11/24/2009)

NET METERING: The difference between the electricity supplied to a customer over the electric distribution system and the electricity generated by the customer's small wind energy system that is fed back into the electric distribution system over a billing period. (Added 11/24/2009)

NON-CONFORMING LOT: A recorded lot which does not conform to the dimensional requirements for the use of a building, structure or land in the district in which it is located, but which lot existed at the time of the adoption of the dimensional requirement with which it does not conform.

NON-CONFORMING STRUCTURE: A structure which does not conform to the use and/or dimensional requirements in the district in which it is located, but which structure existed at the time of the adoption of the use and/or dimensional requirements with which it does not conform.

NON-CONFORMING USE: A use of a building, structure or land in a district where such use is not permitted either by right or by special permit by the zoning ordinance, and which use was in existence at the time of the adoption of the ordinance provision with which it does not conform.

OPEN SPACE: Any parcel or area of land or water, owned by the City of Woburn or a public entity of the City of Woburn, essentially unimproved and set aside, dedicated, designated or reserved for public use and/or enjoyment. The following regulations are established in order to provide for the public interest by designation and preservation of open space in public ownership as greenspaces in perpetuity: 1. To promote the maximum possible protection of open space and to encourage the safe and efficient use of such land and space; 2. To provide and promote outdoor recreation, both passive and organized; 3. To preserve and protect natural resources, specifically, drinking water,

wetlands i.e.: pond, stream, brook, bank, and land bordering, as well as marsh and swamp; 4. To preserve and protect outstanding landscape, topography and historic features; 5. To preserve and protect the habitats of native plants, animals and other wildlife. (added 2/4/97)

PARKING SPACE: Areas for parking of individual cars which measure, at a minimum, nine (9) feet by eighteen (18) feet for standard cars and eight (8) feet by sixteen (16) feet for small cars. Retail parking shall be, at a minimum, ten (10) feet by eighteen (18) feet, and handicap parking shall be at a minimum ten (12) feet by eighteen (18) feet.

PASSENGER TRANSPORTATION TERMINAL: A building or structure intended solely for the shelter and services necessary for passengers of mass transportation.

PAWNBROKER - Pawnbroker means a person engaged in the business of lending money upon the security of goods deposited with it or left in pawn, with or without a fixed period of redemption, whether or not a fixed place of business is maintained for such purposes. Pawnbroker shall not mean or include any bank, savings and loan, credit union or financial institution subject to financial regulations by the federal or state government, nor does it include lending of money on deposit or pledge of title to property. (added 4/21/2017)

PAWN SHOP - The location at which or premises in which a pawnbroker conducts business. (added 4/21/2017)

PERSONS: An individual, corporation, society, association, partnership, trust or other entity, public or private.

PHOTOVOLTAIC SYSTEM (also referred to as Photovoltaic Installation): An active solar energy system that converts solar energy directly into electricity. (added 3/29/2016)

PLANNING BOARD: Planning Board of the City of Woburn.

PREMISES: A lot, together with all buildings, structures, and uses thereon.

PRINCIPAL USE: The main or primary purpose for which a structure or lot is designed, arranged, or intended, or for which they may be used, occupied, or maintained under this ordinance. The use of any other structure or land on the same lot and incidental or supplementary thereto and permitted under this ordinance shall be considered as accessory use.

PRIVATE MEMBERSHIP CLUB: A facility used to house a non-profit social, sports, or fraternal association or organization if used exclusively by members and their guests. (Chapter 180).

RATED NAMEPLATE CAPACITY: The maximum rated output of electric power production of the photovoltaic system in watts of Direct Current (DC). (Added 11/24/2009; amended 3/29/2016)

REAR - The minimum horizontal distance between the rear yard line and the building nearest the rear yard line.

RECORDED: Recorded or registered in the Middlesex County Southern District Registry of Deeds or registered in the Land Court or the record title to a parcel of land disclosed by all pertinent public records.

RECREATION GAINFUL BUSINESS: For profit business enterprises providing various indoor recreation activities or game activities, but not including gambling of any type. (added 9/23/2009)

REFUSE: All garbage, waste paper and paper boxes, tree brush and vine cuttings, floral decorations, tin cans, metalware bottles, glassware, plasticware, ashes, newspapers, paper cartons, wooden crates and discarded metal objects, or any combination of the above materials.

REPAIR ESTABLISHMENTS: Commercial enterprises that repair or service mechanical and/ or electronic products including computers for consumers or businesses; but not including repair to industrial production equipment, auto body work , or automobile engine repair. (added 9/23/2009)

RESEARCH AND TESTING LABORATORY: A laboratory which engages in research, experimental and testing activities, including but not limited to the fields of chemistry, electronics, engineering, geology, physics, and advanced manufacturing, robotics, laser technology, biotechnology, medical, pharmaceutical, biological and behavioral sciences and technology, environmental science, toxicology, genetic engineering, comparative medicine, bioengineering, cell biology, human and animal nutrition including production of equipment, apparatus, machines and devices for research, development, manufacturing and advance and practical application in any such field or area, and including, office, administrative support facilities related to any of the foregoing activities but not including biomedical facilities. Some prototype development may be included, but the primary function is research. (added 5/26/2009; amended 9/8/2016)

RESTAURANT, FULL-SERVICE: Any building, room, space or portion thereof where food is sold for consumption on premises, customers are provided an individual menu, a restaurant employee serves the customers at the same table or counter at which items are consumed. A restaurant, full-service may provide “accessory” delivery service, take out service (except drive-up customer service) and related retail sales items. (added 7/28/2003)

RESTAURANT, FAST FOOD: Any building, room, space or portion thereof where food or beverage is sold for consumption on-site or off-premises within a short period of time, orders are made at either a walk-up window or counter, payment for food or beverage is made prior to consumption, and the packaging of food is done in disposable containers, or is not a “Restaurant, full-service”. A fast food restaurant may provide “accessory” related retail sales items and delivery service. (added 7/28/2003)

RETAIL USE AREA: All areas of a retail sales facility which are routinely used or accessed by customers while shopping or making a purchase, i.e., cash register area, customer pick-up area, inside and outside merchandise display areas, self-serve merchandise storage area, etc. (Added 9/1/92).

ROOFTOP DINING: The use of a structure’s roof, by a Full-Service Restaurant, for assembly or the consumption of food or beverages. (added 2/8/2018)

ROOF TOP WIND ENERGY FACILITY: Roof-mounted systems designed to supplement other electricity sources as an accessory use to existing principle buildings or facilities, wherein the power generated is used primarily for on-site consumption having a total rated capacity of 10 kW or less. (Added 11/24/2009)

ROTOR: The blades and hub of the wind turbine that rotates during the energy conversion operation. (Added 11/24/2009)

SCHOOL: A public or private establishment including elementary, secondary, and high schools, giving general educational instruction, but not including a school giving special or limited instruction such as a business, trade, art, music, dancing or riding school.

SELF SERVICE GASOLINE STATION: Any building or premises wherein or upon which gasoline or other motor fuel is sold at retail and wherein the licensed motor vehicle operator dispenses his or her own motor fuel at any of all of the pumps.

SELF-STORAGE WAREHOUSE FACILITY: A building or structure divided into multiple storage cubicles, leased to private individuals, for storing of goods, products, materials or objects. No storage of high hazard materials, trailers, motor vehicles or any outside storage. (amended 2/4/97)

SETBACK: FRONT - The minimum horizontal distance between the front lot line and the building nearest the front lot line such distance measured at a right angle to the front lot line.

SHADOW FLICKER: The visible flicker effect of the rotating blades of the wind turbine casting shadows on the ground and nearby structures causing a repeating pattern of light and shadow. (Added 11/24/2009)

SIDE - The -minimum horizontal distance between the side yard line and the building nearest the side yard line.

SHOPPING CENTER: A complex of retail stores, service establishments, and other consumer oriented commercial facilities, usually attached, located on one or more contiguous lots under common management and sharing parking and other facilities.

SIGN: Any permanent or temporary device, letter, word, billboard, placard, painting, drawing, poster, banner, pennant, insignia, trade flag, streamer, display, emblem, helium balloon larger than ten (10) feet in diameter which is attached to a building or structure, or representation used as or which is in the nature of an advertisement, announcement, or direction, or is designed to attract the eye.

SIGN, ACCESSORY: Any sign that advertises or indicates the person occupying the premises on which the sign is erected or maintained, or the businesses transacted thereon, or advertises the property itself or any part thereof as for sale or rent.

SIGN, AREA OF: The entire area within a single continuous perimeter, and a single plane, which encloses the extreme limits of the advertising message, announcement or wording together with any frame, trim or other integral part of the display. The area of a freestanding or perpendicular wall sign is the entire area of one side of such sign.

SIGN, AWNING: A sign on a temporary retractable shelter which is supported entirely from the exterior wall of a building.

SIGN, DIRECTORY: A sign that, with respect to the premises on which it is erected and/or an adjacent premises for which the sign is a single common identifier, or with respect to a single integrated development consisting of two (2) or more lots, advertises or indicates one or more of the following: the address and/or occupant of the premises, the business transacted on the premises, the year the business was established, a slogan, directional or parking instructions, or the sale or letting of the premises or any part thereof.

SIGN ERECTED: Attached, built, constructed, reconstructed, altered, enlarged, moved, painted and posted.

SIGN, FREESTANDING: A sign erected on or affixed to the land by post, pole, pylon, or framing device or stand not affixed to a building.

SIGN, MARQUEE: A sign on or attached to a permanent overhanging shelter which projects from the face of a building, is entirely supported by said building, and may have a changeable letter panel.

SIGN, PORTABLE: A free-standing sign not permanently secured to the ground or a structure on the lot it occupies, including trailored signs, and including signs on permanently parked vehicles.

SIGN, ROOF: Any sign which is erected, constructed, and maintained upon or over the roof of any building.

SIGN, TEMPORARY: Any exterior sign maintained for a limited period as specified in this ordinance.

SIGN, WALL: A sign affixed to the wall of a building either parallel or perpendicular to the wall of a building and not extending above the roof plate or parapet line.

SIGN, WINDOW: A sign painted or posted on or within six (6) inches of an interior transparent surface including windows and doors.

SOLAR ACCESS: The access of a solar energy system to direct sunlight. (Added 3/29/2016)

SOLAR COLLECTOR: A device, structure or a part of a device or structure for which the primary purpose is to transform solar radiant energy into thermal, mechanical, chemical, or electrical energy. (Added 3/29/2016)

SOLAR ENERGY: Radiant energy received from the sun that can be collected in the form of heat or light by a solar collector. (Added 3/29/2016)

SOLAR ENERGY SYSTEM: A device or structural design feature, a substantial purpose of which is to provide daylight for interior lighting or provide for the collection, storage and distribution of solar energy for space heating or cooling, electricity generation, or water heating.

a) SOLAR ENERGY SYSTEM, ACTIVE: A solar energy system whose primary purpose is to harvest energy by transforming solar energy into another form of energy or transferring heat from a collector to another medium using mechanical, electrical, or chemical means.
b) SOLAR ENERGY SYSTEM, CARPORT/CANOPY: An accessory structure designed and utilized principally for the support of a solar energy system. For purposes of this Ordinance, a Solar Carport/Canopy is considered to be ground-mounted.
c) SOLAR ENERGY SYSTEM, GRID-INTERTIE: A photovoltaic system that is connected to an electric circuit served by an electric utility.
d) SOLAR ENERGY SYSTEM, GROUND-MOUNTED: An Active Solar Energy System that is structurally mounted to the ground and is not roof-mounted; may be of any size (small-, medium- or large-scale).
e) SOLAR ENERGY SYSTEM, LARGE-SCALE: An Active Solar Energy System that occupies more than 40,000 square feet of surface area (equivalent to a rated nameplate capacity of about 250kW DC or greater).

f) SOLAR ENERGY SYSTEM, MEDIUM-SCALE: An Active Solar Energy System that occupies more than 1,750 but less than 40,000 square feet of surface area (equivalent to a rated nameplate capacity of about 10 - 250 kW DC).
g) SOLAR ENERGY SYSTEM, OFF-GRID: A photovoltaic solar energy system in which the circuits energized by the solar energy system are not electrically connected in any way to electric circuits that are served by an electric utility.
h) SOLAR ENERGY SYSTEM, PASSIVE: A solar energy system that captures solar light or heat without transforming it to another form of energy or transferring the energy via a heat exchanger.
i) SOLAR ENERGY SYSTEM, ROOF-MOUNTED: An Active Solar Energy System that is structurally mounted to the roof of a building or structure; may be of any size (small-, medium- or large-scale).
j) SOLAR ENERGY SYSTEM, SMALL-SCALE: An Active Solar Energy System that occupies 1,750 square feet of surface area or less (equivalent to a rated nameplate capacity of about 10 kW DC or less).

(Added 3/29/2016)

SOLAR THERMAL SYSTEM: An Active Solar Energy System that uses collectors to convert the sun's rays into useful forms of energy for water heating, space heating, or space cooling. (Added 3/29/2016)

SPORTS OR FITNESS CLUBS: A commercial enterprise offering athletic activities or exercise/fitness activities to the general public for a fee; said facilities may have accessory restaurants and retail sales open to patrons of the establishment and further said facilities may be used for social or business gatherings. (added 9/23/2009)

STORAGE: The keeping of goods, products, materials or objects securely and safely when not in use or in transit. (added 11/20/90).

STORAGE CONTAINER AND STORAGE TRAILER: A metal container or trailer on or off wheels used for the keeping of goods, materials or objects securely and safely when not in use or in transit. (added 6/27/2005)

STORY: A part of a building comprised between a floor and a floor or roof next above, including a basement, but not including a cellar.

STREET: A public way, or a way shown on a plan approved by the Planning Board under the subdivision control law, or a private way in existence when the subdivision law became effective in the City which, in the opinion of the Planning Board has sufficient width, suitable grades and adequate construction to provide for the needs of a vehicular traffic and the installation of municipal services.

STRUCTURE: Any combination of materials assembled, constructed, erected or maintained at a fixed location and place permanently or temporarily in or on the ground.

SUPERMARKET: A business activity selling a wide range of fresh or processed foods and household items as an accessory sales item. (added 9/23/2009)

SWIMMING POOL: Every artificial pool of water having a depth of two feet or more at any point and used for swimming or bathing, located indoors or outdoors, together with the bathhouses, equipment and appurtenances used in connection therewith. (Adapted from State Sanitary Code, Chapter V, Section 435-01). (Added 5/2/89).

SWIMMING POOL, RESIDENTIAL: a swimming pool established or maintained by an individual for his or her own family's use, or for the use of personal guests of his or her household. (Adapted from State Sanitary Code, Chapter V, Section 435-01). (Added 5/2/89).

TOWER: The monopole, guyed monopole or lattice structure that supports the rotor and nacelle. (Added 11/24/2009)

TOWNHOUSE: A multi-family dwelling in which all dwelling units are separated by side or party walls.

TRADE CENTER: Mixed use facilities, primarily for the conduct of wholesale trade, including but not limited to offices, showrooms, exhibit hall and other facilities to support trade shows.

TRAILER: A vehicular, portable unit designed for travel, camping or recreational use, excluding mobile homes, but including campers, tent trailers, and boat trailers.

USE: The manner in which land or a structure is to be occupied or utilized.

USABLE OPEN SPACE: Space in a yard that is unoccupied by buildings, and not devoted to service driveways, off-street loading or parking spaces and ways.

VETERINARIAN SPECIALIZED SERVICES: A veterinarian hospital facility providing 24 hour, 7 day a week emergency and critical care services to referring general practices, including, overnight care for treated animals and monitoring by highly skilled nurses and doctors. Specialized animal services shall include, but not limited to: veterinary ophthalmology services, i.e. cataract surgery, surgical services, including total hip replacement and oncology, using state of the art cancer drugs and ultra-sonography. (Added 1/24/2000)

WAREHOUSE: A building or structure for storing goods, products, materials or objects to be distributed. (Added 11/20/90)

WIND MONITORING OR METEOROLOGICAL ("TEST" OR "MET") TOWER: A temporary tower used for supporting anemometer, wind vane, and other equipment to

assess the wind resource at a predetermined height above the ground, erected as part of a wind-energy facility feasibility process. (Added 11/24/2009)

WIND TURBINE: A device that converts kinetic energy of the wind into rotational energy used to generate electrical power. A wind energy conversion device typically consists of a rotor, nacelle, and tower. (Added 11/24/2009)

WIND TURBINE HEIGHT: The height of a wind turbine measured from natural grade to the tip of the rotor blade at its highest point, or blade-tip height. (Added 11/24/2009)

WIRELESS COMMUNICATION LINK: A facility consisting exclusively of fixtures and equipment used by a public utility or FCC licensed commercial entity for the wireless transmission and reception of radio signals including:

1. Antenna Elements: reception and transmission equipment and fixtures such as antennae, communication dishes and similar devices.

2. Antenna Support Structures: structures that are erected and used primarily to support such reception and transmission equipment including, without limitation, monopoles.
3. Equipment Shelters: any accessory mechanical, electronic, or telephonic equipment, fixtures, wiring and protective covering customary and necessary to operate such wireless communication equipment.

A wireless communications link is a transmission and reception substation, not a principal facility for conducting a communications business. Wireless communications link shall not include television and radio station transmission antennae. (added 6/25/97)

WIRELESS COMMUNICATIONS LINK, FREE-STANDING EXTERIOR: Any out-of-door wireless communications link mounted on, erected, or supported by any free-standing monopole, excluding lattice style towers requiring three (3) or more legs or guywires. (added 6/25/97)

WIRELESS COMMUNICATIONS LINK, BUILDING-MOUNTED: Any out-of-door wireless communication link mounted on, erected on, or supported in whole or in part by an existing building or structure (including without limitation, buildings, water towers, smoke stacks and the like) occupied and/or used primarily for other purposes. (added 6/25/97)

WIRELESS COMMUNICATIONS LINK, INDOOR: Any indoor wireless communications link mounted inside, erected inside or supported within an existing building or structure including, without limitation, buildings, cupolas, church spires, inactive smoke stacks and the like occupied and/or used primarily for other purposes. (added 6/25/97)

YARD, FRONT: An open space extending for the full width of the lot between the front

line of the structure wall and the front lot line. On corner lots having frontage on two or more streets, each such street shall have a front yard. (Added 3/29/2016)

YARD, REAR: An open space extending the full width of the lot between the rear line of the structure wall and the rear lot line. (Added 3/29/2016)

YARD, SIDE: An open space extending for the full length of a structure between the structure wall and the side lot line. On triangular-shaped lots, each side yard setback shall be paralleled and extended to a rear point of intersection within the lot. (Added 3/29/2016)

# SECTION 3

# ADMINISTRATION, ENFORCEMENT AND APPEALS

## 3.1 Administration

1. Building Commissioner -

The Building Commissioner is responsible for the enforcement of this ordinance as set forth in Section 3.2 below.

2. City Council -

1. The City Council is hereby designated as the special permit granting authority under this ordinance, unless otherwise specified.

2. The City Council shall hear and decide applications for the extension or alteration of non-conforming uses or structures in accordance with the provisions of Chapter 40A, Section 6, and in accordance with the provisions of Section 7 of this ordinance.

3. Board of Appeals -

    1. There will be a Board of Appeals consisting of five regular and three associated members who are year round residents of the City of Woburn and citizens of the City of Woburn, all appointed by the Mayor, subject to confirmation by the City Council for the terms and with the powers and duties set forth in General Laws, Chapter 40A.

    2. Powers of Board of Appeals -
        a) To hear and decide appeals in accordance with Chapter 40A, Section 8.
        b) To hear and decide petitions for variances in accordance with Section 10 of Chapter 40A.
        c) To adopt rules and regulations in accordance with the provisions of Chapter 40A, Section 12.
        d) To hear appeals under Chapter 41, Section 81z.

4. Planning Board

    1. The Planning Board is hereby designated as the special permit granting authority for Site Plan approval under section 12.2.2 of this ordinance.

## 3.2 Enforcement

1. The Building Commissioner shall not issue a permit for construction, alteration, moving, or occupancy of any structure or building, or for any use of structures or land related to such permit, if the construction, alteration, moving, occupancy or use would be in violation of any of the provisions of this Ordinance. Nor shall the Building Commissioner issue any permit where plans, or other permits and approvals, submitted to the Commissioner, or lack thereof, would not comply with the provisions of this Ordinance, or with the General Laws incorporated into this Ordinance. Any plans submitted, deemed as a commercial facility as defined under Title III of the Americans with Disabilities Act (ADA), public accommodation as defined under Title III of the Americans with Disabilities Act (ADA), private club not under Title II of the Civil Rights Act of 1964, or public entity, as defined under Title III of the Americans with Disabilities Act (ADA), with the application shall contain a statement signed by the architect of record as follows: 'These Plans as submitted: 1. _____ Conform to the MAAB Laws and Regulations, 2. _____ Conform to the ADA Law and regulations, 3. _____ Do not conform at this time, 4. Waivers will be filed for the following issue(s) _____. Certified' with the architect's name and stamp affixed thereto. (amended 4/25/2005)

2. Any person violating any of the provisions of this ordinance shall be fined not more than $300.00 for each offense. Each day that such violation continues shall constitute a separate offense.

    1. Notwithstanding the foregoing, any alleged violation of any of the provisions of this Zoning Ordinance may, in the sole discretion of the Building Commissioner, be made the subject matter of proceedings initiated by the Building Commissioner pursuant to the provisions of MGL Chapter 40, Section 21D, that is, Non-Criminal Disposition. If the Building Commissioner so elects to proceed under Chapter 40, Section 21D, all the terms and provisions of such Chapter and Section shall thereafter govern said action. (added 07/14/87)

    2. If any person who violates this ordinance fails to pay the fine assessed by the Building Inspector within 21 days or after a responsible finding at the district court hearing held in accordance with Massachusetts General Laws Chapter 40, Section 21D, the Building Commissioner may, in addition to pursuing further action under Massachusetts General Laws Chapter 40, Section 21D, forward notice of the violation assessment to the City Treasurer/Collector who shall collect the violation assessment in accordance with the provisions of Massachusetts General Laws Chapter 60, Section 23 and all other applicable provisions of the Massachusetts General Laws, as well as Title 2 and Title 3 of the 1989 Woburn Municipal Code, as amended. (added 2/23/2005)

3. The Building Commissioner, in the enforcement of this ordinance, shall withhold a permit for the construction, alteration or moving of any building or structure if the building or structure as constructed, altered or moved would be in violation of this ordinance, and no permit shall be granted for a new use of a building, structure or land which use would be in violation of this ordinance.

4. The Building Commissioner shall institute appropriate legal proceedings to enforce the provisions of this ordinance or to restrain by injunction any violation thereof, or both, and shall institute and take any and all such action as may be necessary to enforce full compliance with any and all provisions of this ordinance.

5. Enforcement Request. If the Building Commissioner is requested in writing to enforce this ordinance against any person allegedly in violation of same and the Building Commissioner declines to act, he shall notify, in writing, the party requesting such enforcement of any action or refusal to act and the reasons therefore within fourteen days of receipt of such request.

6. The imposition of the penalties herein prescribed shall not preclude the Building Commissioner from instituting appropriate action to prevent unlawful construction or to restrain, correct or abate a violation, or to prevent illegal occupancy of a building, structure or premises or to stop an illegal act, conduct, or business use of a building or structure in or about any premises.

**3.3 <u>Appeals</u>**

1. Any refusal or failure of the Building Commissioner to respond to a written request to enforce the provisions of this ordinance against any person allegedly in violation of this ordinance may be appealed to the Board of Appeals. In such instances, the Building Commissioner shall notify, in writing, the party requesting such enforcement of any action or refusal to act and the reasons therefore, within fourteen (14) days of receipt of such request.

2. Any issuance of a permit, failure to respond to an enforcement request or decision by the Building Commissioner may be appealed by any person, board or agency having standing under the provision of Chapter 40A, Sections 7 and 8, to the Board of Appeals, provided the appellant appeals within thirty days from the decision, or failure to act being appealed.

3. Any appeal to the Board of Appeals under this section shall be taken by filing a notice of appeal, specifying the grounds thereof to the City Clerk, who shall forthwith transmit copies of the notice to the Building Commissioner and to the Board of Appeals, as provided in Chapter 40A, Section 15. The Building Commissioner shall transmit to the Board of Appeals all documents and papers constituting the record of the case in which the appeal is taken.

4. The Board of Appeals shall hold public hearing on any appeal transmitted to it by the City Clerk within sixty five (65) days of such transmittal. The public bearing shall be duly noticed and conducted as specified in Chapter 40A, Section 15. Additionally written notice of said public hearing shall be delivered to the Building Commissioner by the Board of Appeals at least fourteen (14) days prior to said meeting. (Amended 9/26/2001)

5. The Board of Appeals shall render and file its decision within seventy five (75) days of the filing of an appeal under this section, unless extended in writing by the parties, or the relief sought shall be constructively granted. Such constructive grants shall be evidenced by the issuance by the Board of a certificate signed by a majority of the Board. Approval of an appeal shall require the concurring vote of four of the five members of the Board of Appeals. Failure to act within seventy five days shall be deemed approval. Recording, filing, and noticing of the decision shall meet the requirements of Chapter 40A, Section 15.

**3.4 <u>Administrative Correction of Scrivener's Errors</u>**

Typographical or numbering errors which do not affect the intent or substance of this Ordinance or any of its articles or sections may be corrected by the City Clerk, without need of a public hearing or further legislative action. The City Clerk shall notify the City Council of the scrivener's error and the correction and, upon the City Council acceptance of the changes thereafter shall file a revised copy of same in the Offices of the City Clerk, City Solicitor and Building Commissioner, with a 'Scrivener's Note' providing the date and substance of the correction. (added 3/9/2017)

**********

# SECTION 4

# ESTABLISHMENT OF DISTRICTS

4.1 For the purpose of this ordinance, the City of Woburn is divided into sixteen classes of districts as shown on the zoning map entitled, "Zoning Map of the City of Woburn, dated April 7, 1980, as revised. This map, on file with the City Clerk, is herewith incorporated as part of this ordinance. (amended 4/15/97; amended 5/24/2004).

4.2 Said classes of districts are designated as follows:

| | | |
|---|---|---|
| Single Family | Residential | R-1 |
| Single Two Family | Residential | R-2 |
| Townhouse and Garden Apartment | Residential | R-3 |
| Apartment, other | Residential | R-4 |
| Neighborhood Business | Business | B-N |
| Highway Business | Business | B-H |
| Downtown Business | Business | B-D |
| Interstate Business | Business | B-I |
| Industrial General | Industrial | I-G |
| Industrial Park | Industrial | I-P |
| Industrial Park Two | Industrial | IP-2 |
| Mixed Use | Mixed | S-1 |
| Mixed Use II | Mixed | S-2 |
| Office Park | Office | O-P |
| Office Park Overlay | Office | OP-93 |
| Open Space | Open Space | O-S |

(amended 4/15/97, amended 8/24/2000; amended 5/24/2004)

4.3 Specific use and dimensional and density requirements applicable to these districts are contained in Sections 5 and 6, and in other sections of this ordinance.

4.4 In addition to the 16 districts listed in 4.2, Floodway and Flood Plain Districts are established as overlay districts and shown on the Middlesex County Flood Insurance Rate Maps for the City of Woburn dated June 4, 2010 as special Floodway and Flood Plain areas in zone AE or as shown on the Local 100 Year Floodplain Map of Woburn, Massachusetts, prepared by the City of Woburn Engineering Department, dated June 4, 2010 for 100 Year Floodplain Areas. (amended 4/15/97; amended 5/6/2010).

## 4.5 Boundaries of Districts

Where any uncertainty exists with respect to the boundary of any district as shown on the Zoning Map, the following rules apply:

1. Where a boundary is indicated as a highway, street, alley, railroad, watercourse, or other body of water, it shall be construed to be the centerline or middle thereof. Where a boundary approximates a city boundary, it shall be construed to be the limits of the city boundary.

2. Where a boundary is indicated as following approximately or parallel to a highway, a street, alley, railroad, watercourse, or other body of water, it shall be construed to be parallel thereto and at such distance therefrom as shown on the Zoning Map. If no dimension is given, such distance shall be determined by the use of the scale shown on the zoning map.

3. Where a dimensional boundary coincides within 10 ft. or less with a lot line, the boundary shall be construed to be the lot line.

4. The Floodway and Flood Plain Districts are established as overlay districts and shown on the Middlesex County Flood Insurance Rate Maps for the City of Woburn dated June 4, 2010 as special Floodway and Flood Plain areas in zone AE. The map panels of the Middlesex County FIRM that are wholly or partially within the City of Woburn are map numbers 25017C0293E, 25017C0294E, 25017C0313E, 25017C0402E, 25017C 0404E, 25017C0406E, 25017C0407E, 25017C0408E, 25017C0409E and 25017C0426E dated June 4, 2010 or as shown on the Local 100 Year Floodplain Map of Woburn, Massachusetts, prepared by the City of Woburn Engineering Department, dated June 4, 2010 for 100 Year Floodplain Areas.

   The exact boundaries of the District may be defined by the 100-year base flood elevations shown on the FIRM and further defined by the Middlesex County Flood Insurance Study (FIS) report dated June 4, 2010. The FIRM and FIS report are incorporated herein by reference and are on file with the City Clerk and the City Engineer. (amended 5/6/2010)

**********

# SECTION 5

# USE REGULATIONS

Regulations for uses within each district are contained in Section 5.1, Table of Use Regulations, and in Section 5.2.

## 5.1 Table of Use Regulations

For each of the Zoning Districts, uses permitted by right are designated by an “X”; uses that require a special permit from the City Council are designated by a “P”; uses that require a Special Permit from the Planning Board are designated by “PB”; and those uses not permitted are designated by a “-“ (See Note 1). (amended 10/04/1999)

(See Following Pages)

For each zoning district:
"X" is a by right use
"P" requires a special permit
"-" is not permitted use

Section 5.1
Table of Use Regulations

| | | R-1 | R-2 | R-3 | R-4 | B-N | B-H | B-D | B-I | I-P | IP-2 | I-G | S-1 | S-2 | 0-P | OP-93 | 0-S | Notes; other sections | Special Permit Requirements in addition to | Site Plan Requirements |
|---|---|---|---|---|---|---|---|---|---|---|---|---|---|---|---|---|---|---|---|---|
| | **Residential Uses** | | | | | | | | | | | | | | | | | | | |
| 1 | Detached Single Family | X | X | X | X | _ | _ | _ | _ | _ | _ | _ | X | _ | _ | _ | _ | | | |
| 2a | Detached Two-Family Dwelling: Conversion of Existing single-family dwelling, provided all requirements of Sections 6.1 and 8.0 are met, subject to variance | _ | X | X | X | _ | _ | _ | _ | _ | _ | _ | X | _ | _ | _ | _ | Section 6.1 | | |
| 2b | Detached Two-Family Dwelling: New construction of two-family dwelling, provided all requirements of Sections 6.1 and 8.0 are met, subject to a variance | _ | X | X | X | _ | _ | _ | _ | _ | _ | _ | X | _ | _ | _ | _ | | | |
| 3a | Townhouse or Garden Apartment: Detached dwellings in a cluster development | P | P | P | P | _ | _ | _ | _ | _ | _ | _ | _ | _ | _ | _ | _ | Section 10.4.10 | | Section 12 |
| 3b | Townhouse or Garden Apartment: Congregate Elderly Housing | _ | _ | _ | _ | _ | _ | _ | _ | _ | _ | _ | P | P | _ | _ | _ | | | Section 12 |
| 3c | Townhouse or Garden Apartment: Townhouse Development (amended 6/19/1996, 7/10/1998, 10/9/1998) | P | P | P | P | P | _ | _ | _ | _ | _ | _ | P | _ | _ | _ | _ | Section 5.1 Note 20 | Section 11.3.2 | Section 12.3.2 Section 14 |
| 3d | Townhouse or Garden Apartment: Garden Apartment (added 6/19/1996) | _ | _ | P | P | _ | _ | _ | _ | _ | _ | _ | _ | _ | _ | _ | _ | | | Section 12 |
| 4 | Elevator Apartment (amended 2/14/2001) | _ | _ | _ | P | _ | _ | _ | _ | _ | _ | _ | P | P | _ | _ | _ | | | Section 12 |
| 5 | Dwelling units above first story in commercial structure (amended 2/14/2001; amended 2/8/2007) | _ | _ | _ | _ | _ | P | P | P | _ | _ | _ | X | _ | _ | _ | _ | Section 11.6.11 | | |
| 6 | Mobile home, except as temporary residence | _ | _ | _ | _ | _ | _ | _ | _ | _ | _ | _ | _ | _ | _ | _ | _ | | | |
| 7 | Mobile home, as temporary residence | X | X | X | X | X | X | X | X | X | X | X | X | X | X | X | _ | Note 2 | | |
| 8 | Boarding, rooming or lodging house (amended 5/2/1995) | _ | _ | _ | _ | _ | _ | _ | _ | _ | _ | _ | _ | _ | _ | _ | _ | | | |
| | **Recreational and Institutional Uses** | | | | | | | | | | | | | | | | | | | |
| 9 | Golf course - country club (amended 2/4/1997) | X | X | X | X | _ | _ | _ | _ | X | X | X | X | _ | _ | _ | P | | | |
| 9a | Golf Driving Ranges (added 5/8/2001) | _ | _ | _ | _ | _ | _ | _ | _ | _ | _ | _ | _ | _ | _ | _ | P | | | |
| 10 | Bowling Alley/Billiard Parlor | _ | _ | _ | _ | _ | P | P | P | _ | _ | _ | _ | _ | _ | _ | _ | | | Section 12 (Note 3) |
| 11a | Elementary or secondary school, including recreational facilities: Public | X | X | X | X | X | X | X | X | X | X | X | X | X | X | X | _ | 5.2.2 | | |
| 11b | Elementary or secondary school, including recreational facilities: Private | P | P | X | X | X | _ | _ | _ | _ | _ | _ | X | _ | _ | _ | _ | 5.2.2 | | |
| 12 | Child Care Center | P | P | P | P | X | X | X | X | X | X | X | X | X | X | X | _ | 5.2.2 | | |
| 13 | Business or Trade School | _ | _ | _ | _ | X | X | X | X | X | X | X | X | X | X | X | _ | | | |
| 14 | Community Center | P | P | P | P | P | P | P | P | _ | _ | _ | P | P | P | P | _ | 5.2.2 | | |

For each zoning district:
"X" is a by right use
"P" requires a special permit
"-" is not permitted use

Section 5.1
Table of Use Regulations

| | | R-1 | R-2 | R-3 | R-4 | B-N | B-H | B-D | B-I | I-P | IP-2 | I-G | S-1 | S-2 | 0-P | OP-93 | 0-S | Notes; other sections | Special Permit Requirements in addition to | Site Plan Requirements |
|---|---|---|---|---|---|---|---|---|---|---|---|---|---|---|---|---|---|---|---|---|
| 14a | Cemetery: Public (amended 2/4/1997) | P | P | P | P | P | P | P | P | P | P | P | P | P | P | P | P | | | |
| 15a | Theater: Under 15,000 sf gfa (amended 10/4/1999) | _ | _ | _ | _ | _ | _ | X | P | X | X | _ | _ | _ | _ | _ | _ | | | Section 12, Note 3 |
| 15b | Theater:Over 15,000 sf gfa (amended 10/4/1999) | _ | _ | _ | _ | _ | _ | P | P | P | P | _ | _ | _ | _ | _ | _ | | | |
| 16a | Indoor and Outdoor Racquet sports facility: Under 15,000 sf gfa (amended 10/4/1999) | _ | _ | _ | _ | _ | X | _ | X | X | X | _ | _ | _ | _ | _ | _ | | | |
| 16b | Indoor and Outdoor Racquet sports facility: Over 15,000 sf gfa (amended 10/4/1999) | _ | _ | _ | _ | _ | P | _ | P | P | P | _ | _ | _ | _ | _ | _ | | | |
| 17a | Physical fitness training and recreation facilities including, but not limited to, health clubs, tennis clubs, skating rinks, indoor commercial playgrounds and indoor commercial sports facilities: Under 15,000 sf gfa (amended 9/5/1995, 10/4/1999; 9/22/2016) | _ | _ | _ | _ | _ | X | X | X | X | X | X | X | X | X | X | _ | Note 26 | | |
| 17b | Physical fitness training and recreation facilities including, but not limited to, health clubs, tennis clubs, skating rinks, indoor commercial playgrounds and indoor commercial sports facilities: Over 15,000 sf gfa (amended 9/5/1995, 10/4/1999) | _ | _ | _ | _ | _ | P | P | P | P | P | P | _ | P | P | P | _ | | | |
| 18 | Private membership club | _ | _ | _ | _ | X | X | X | X | X | X | X | _ | _ | _ | _ | _ | | | |
| 19a | Extended Care Facility | _ | P | P | P | _ | X | _ | X | _ | _ | _ | X | P | _ | _ | _ | | | |
| 19b | General Hospital | _ | _ | P | P | _ | X | _ | X | _ | _ | _ | X | P | P | P | _ | | | |
| 19c | Special Hospital | _ | _ | P | P | _ | X | _ | X | _ | _ | _ | X | P | P | P | _ | 5.2.2 | | Section 12, Note 3 |
| | **Retail, Commercial and Service Uses** | | | | | | | | | | | | | | | | | | | |
| 20 | Hotel and motel with the operation of a hotel and motel (amended 10/4/1999) | _ | _ | _ | _ | _ | _ | P | P | P | P | P | _ | P | P | P | _ | | | Section 12, Note 3 |
| 20a | Mixed Use Hotel/Restaurant (added 10/9/2014) | _ | _ | _ | _ | _ | _ | P | P | P | P | P | _ | P | P | P | _ | | | |
| 21 | Retail and service uses in connection with the operation of hotel or motel, and located within the structure, such as retail shops, personal and consumer service establishment and the | _ | _ | _ | _ | _ | _ | X | X | X | X | X | _ | X | X | X | _ | Note 4 | | |
| 22a | Retail establishment: Less than 5,000 sf gross floor area | _ | _ | _ | _ | X | X | X | X | _ | _ | _ | _ | _ | _ | _ | _ | Note 16 | | |
| 22b | Retail establishment: 5,000 to 15,000 sf of gross floor area (amended 11/20/1998) | _ | _ | _ | _ | _ | P | X | P | _ | _ | _ | _ | _ | _ | _ | _ | Note 16 | | Section 12, Note 3 |
| 22c | Retail establishment: Greater than 15,000 sf of gross floor area to require a special permit in B-H, B-D and B-I zoning districts | _ | _ | _ | _ | _ | P | P | P | _ | _ | _ | _ | _ | _ | _ | _ | | | |

For each zoning district:
"X" is a by right use
"P" requires a special permit
"-" is not permitted use

Section 5.1
Table of Use Regulations

| | | R-1 | R-2 | R-3 | R-4 | B-N | B-H | B-D | B-I | I-P | IP-2 | I-G | S-1 | S-2 | 0-P | OP-93 | 0-S | Notes; other sections | Special Permit Requirements in addition to | Site Plan Requirements |
|---|---|---|---|---|---|---|---|---|---|---|---|---|---|---|---|---|---|---|---|---|
| 23 | Shopping Center | _ | _ | _ | _ | _ | _ | P | P | _ | _ | _ | _ | _ | _ | _ | _ | | | Section 12, Note 3 |
| 24 | Trade Center | _ | _ | _ | _ | _ | _ | P | P | P | P | P | _ | P | P | P | _ | | | Section 12, Note 3 |
| 25 | Personal service estabishment, including but not limited to barber and beauty shop, shoe repair, retail dry cleaning, self service laundromat | _ | _ | _ | _ | X | X | X | X | _ | _ | _ | _ | _ | _ | _ | _ | | | |
| 25a | Check cashing facility (added 4/10/1998) | _ | _ | _ | _ | _ | _ | _ | _ | _ | _ | _ | _ | _ | _ | _ | _ | | | |
| 25b | Automatic Teller Machine (ATM), Freestanding (added 7/28/2003) | _ | _ | _ | _ | _ | X | X | X | X | X | X | X | X | X | X | _ | | | |
| 25c | Financial Institution (added 7/28/2003) | _ | _ | _ | _ | _ | X | X | X | X | X | X | X | X | X | X | _ | | | |
| 25d | Pawn Shop (added 4/21/2017) | _ | _ | _ | _ | _ | _ | _ | _ | _ | _ | _ | _ | _ | _ | _ | _ | | | |
| 26 | Funeral home | _ | P | _ | _ | X | X | X | X | _ | _ | _ | X | _ | _ | _ | _ | 5.2.2 | | |
| 27 | Business service and business sales establishment, including but not limited to repair or adjusments for apparel, appliances or office equipment (For the purposeof this paragraph, the term "business sales establishment" shall not be interpreted to mean or permit retail sales.) (amended 11/20/2003) | _ | _ | _ | _ | X | X | X | X | X | X | X | _ | X | X | X | _ | | | |
| 28 | Restaurant, Full-Service (amended 7/28/2003; 9/22/2016; 2/8/2018) | _ | _ | _ | _ | _ | X | X | X | X | X | X | X | X | X | X | _ | Note 16; Note 26, Note 27 | | |
| | | | | | | | | | | | | | | | | | | | | |
| 29 | Restaurant, Fast Food (amended 7/28/2003; 7/23/2004; 1/30/2008; 9/22/2016) | _ | _ | _ | _ | P | P | P | P | P | P | P | P | P | P | P | _ | Note 16; Note 26; Section 18.3.4 | | Section 12 |
| 30a | Business, professional and general office: Under 15,000 sf gfa (amended 10/4/1999) | _ | _ | _ | _ | X | X | X | X | X | X | X | X | X | X | X | _ | | | Section 12, Note 3 |
| 30b | Business, professional and general office: Over 15,000 sf gfa (amended 10/4/1999, 1/29/2001) | _ | _ | _ | _ | P | P | P | P | P | P | P | P | P | P | P | _ | | | |
| 31 | Service uses in connection with the operation of a business, professional or general office, such as business, personal or consumer | _ | _ | _ | _ | X | X | X | X | X | X | X | _ | X | X | X | _ | Note 4 | | |
| 32 | Conversion of a dwelling with less than 2,000 sf of gross floor area for offices or institutional use | _ | _ | _ | _ | X | X | X | X | _ | _ | _ | X | X | X | X | _ | | | |
| 33a | Medical and dental offices, limited to general outpatient care and diagnosis, for projects up to 5,000 square feet (amended 6/22/2002) | _ | _ | _ | _ | X | X | X | X | X | X | X | X | X | X | X | _ | | | Section 12 |
| 33a | Medical and dental offices, limited to general outpatient care and diagnosis, for projects in excess of 5,000 square feet (amended 6/22/2002; amended 5/23/2005) | _ | _ | _ | _ | X | X | X | X | X | X | X | X | X | X | X | _ | | | Section 12 |

For each zoning district:
"X" is a by right use
"P" requires a special permit
"-" is not permitted use

Section 5.1
Table of Use Regulations

| | | R-1 | R-2 | R-3 | R-4 | B-N | B-H | B-D | B-I | I-P | IP-2 | I-G | S-1 | S-2 | 0-P | OP-93 | 0-S | Notes; other sections | Special Permit Requirements in addition to | Site Plan Requirements |
|---|---|---|---|---|---|---|---|---|---|---|---|---|---|---|---|---|---|---|---|---|
| 33b | Muscular Therapy (amended 7/28/2003) | _ | _ | _ | _ | _ | P | P | P | _ | _ | _ | P | X | P | P | _ | | | |
| 33c | Medical Marijuana Treatment Center (added 7/16/2015) | _ | _ | _ | _ | _ | _ | _ | _ | _ | p | _ | _ | _ | _ | _ | _ | Note 19b | | |
| 33d | Marijuana Establishment (added 3/21/2017) | - | - | - | - | - | - | - | - | - | P | - | - | - | - | - | - | Note 19c | | |
| 34 | Veterinarian offices | _ | _ | _ | _ | X | X | X | X | _ | _ | _ | X | _ | _ | _ | _ | | | |
| 34a | Veterinarian specialized services (added 1/24/2000) | _ | _ | _ | _ | _ | _ | _ | _ | P | _ | _ | _ | _ | _ | _ | _ | Note 21 | | |
| 35 | Kennel | _ | _ | _ | _ | _ | _ | _ | _ | P | P | P | _ | _ | _ | _ | _ | | | |
| 35a | Pet Care Facility (added 9/29/2007) | _ | _ | _ | _ | | | | P | | | | _ | _ | _ | _ | _ | Note 23 | | |
| 36 | Commercial greenhouse | _ | _ | _ | _ | X | X | X | X | X | X | X | _ | _ | _ | _ | _ | | | |
| 37 | Car wash | _ | _ | _ | _ | _ | P | _ | P | _ | _ | P | _ | _ | _ | _ | _ | | | |
| 38 | Massage parlor, business conducting massage, or any public or private operation which engages in conduct offensive to the general public or offends common decency | _ | _ | _ | _ | _ | _ | _ | _ | _ | _ | _ | _ | _ | _ | _ | _ | | | |
| 39a | Printing and publishing: Newspaper publishing, with editorial and administrative offices on premises | _ | _ | _ | _ | _ | X | X | X | X | X | X | _ | P | P | P | _ | | | Section 12, Note 3 |
| 39b | Printing and publishing: Other printing and publishing | _ | _ | _ | _ | _ | _ | _ | _ | X | X | X | _ | _ | _ | _ | _ | | | Section 12, Note 3 |
| | **Industrial Uses** | | | | | | | | | | | | | | | | | | | |
| 40aa | Manufacturing: Light Manufacturing: Under 15,000 sf gfa (amended 10/4/1999) | _ | _ | _ | _ | _ | _ | _ | _ | X | X | X | _ | PB | PB | PB | _ | Note 5 | | Section 12, Note 3 |
| 40ab | Manufacturing: Light Manufacturing: Over 15,000 sf gfa (amended 10/4/1999) | _ | _ | _ | _ | _ | _ | _ | _ | PB | PB | PB | _ | PB | PB | PB | | | | |
| 40ba | Manufacturing: Heavy Manufacturing: Under 15,000 sf gfa (amended 10/4/1999) | _ | _ | _ | _ | _ | _ | _ | _ | X | X | X | _ | _ | _ | _ | _ | | | Section 12, Note 3 |
| 40bb | Manufacturing: Heavy Manufacturing: Over 15,000 sf gfa (amended 10/4/1999) | _ | _ | _ | _ | _ | _ | _ | _ | PB | PB | PB | _ | _ | _ | _ | _ | | | |
| 41 | Research and testing laboratory (amended 11/22/2017) | _ | _ | _ | _ | _ | _ | _ | _ | X | X | X | _ | P | X | X | _ | | | |
| 41a | Research and Testing laboratory uses - for new construction only - that create 25,000 sq. ft. or more of new gross floor area (added 11/22/2017) | _ | _ | _ | _ | _ | _ | _ | _ | P | P | P | _ | P | P | P | _ | Section 18 | | |
| 41b | Biomedical Facility (added 5/26/2009; amended 11/22/2017) | _ | _ | _ | _ | _ | _ | _ | _ | X | X | X | _ | _ | X | X | _ | Note 24 | | |
| 42 | Wholesale establishment, warehouse and distribution center | _ | _ | _ | _ | _ | _ | _ | _ | P | P | P | _ | _ | _ | _ | _ | Section 11.6 | | Section 12, Note 3 |
| 42a | Self-storage Warehouse facility - no storage of high hazard materials, trailers, motor vehicles or any outside storage (amended 2/4/1997; 5/9/2000; 6/5/2008; 2/9/2017) | _ | _ | _ | _ | _ | _ | _ | _ | _ | _ | _ | _ | _ | _ | _ | _ | | | |
| 43 | Open or outside storage of new or used building materials or equipment | _ | _ | _ | _ | _ | _ | _ | _ | P | P | P | _ | _ | _ | _ | _ | Note 6 | | |

For each zoning district:
"X" is a by right use
"P" requires a special permit
"-" is not permitted use

Section 5.1
Table of Use Regulations

| | | R-1 | R-2 | R-3 | R-4 | B-N | B-H | B-D | B-I | I-P | IP-2 | I-G | S-1 | S-2 | 0-P | OP-93 | 0-S | Notes; other sections | Special Permit Requirements in addition to | Site Plan Requirements |
|---|---|---|---|---|---|---|---|---|---|---|---|---|---|---|---|---|---|---|---|---|
| 44 | Automobile and truck repair garage (amended 1/31/2012 | _ | _ | _ | _ | _ | P | P | P | P | P | P | P | _ | _ | _ | _ | Note 25 | | |
| | | | | | | | | | | | | | | | | | | | | |
| 45 | Sale or rental of automobiles, trucks, truck trailers, and motorcycles, including accessory repair and storage facilities | _ | _ | _ | _ | _ | P | P | P | P | P | P | _ | _ | _ | _ | _ | | | |
| 46a | Gasoline station | _ | _ | _ | _ | P | P | P | P | P | P | P | _ | _ | _ | _ | _ | Note 13 | | |
| 46b | Self service gasoline station | _ | _ | _ | _ | P | P | P | P | P | P | P | _ | _ | _ | _ | _ | Note 13 | | |
| 47 | Commercial radio or television transmission tower | P | P | P | P | P | P | P | P | P | P | P | P | P | P | P | _ | Note 7 | | |
| 48 | Passenger transportation terminal (11/21/1995) | _ | _ | P | P | P | P | P | P | P | P | P | P | P | P | P | _ | | | |
| 49 | Rail terminal, including freight yard and freight terminal | _ | _ | _ | _ | _ | _ | _ | _ | P | P | P | _ | _ | _ | _ | _ | | | |
| 50 | Truck terminal, truck freight yard and freight terminal | _ | _ | _ | _ | _ | _ | _ | _ | _ | _ | _ | _ | _ | _ | _ | _ | | | |
| 51 | Essential public services | X | X | X | X | X | X | X | X | X | X | X | X | X | X | X | _ | 5.2.2 | | |
| 52 | Helicopter, rotary-wing aircraft, or gyroplane landing area | _ | _ | _ | _ | _ | _ | _ | _ | P | P | P | _ | P | P | P | _ | | | |
| | **High Hazard Uses** | | | | | | | | | | | | | | | | | | | |
| 53 | High hazard use listed in the International Building Code as published by the International Code Council (amended 5/22/2008) | _ | _ | _ | _ | _ | _ | _ | _ | P | _ | P | _ | _ | _ | _ | _ | Note 8 | | |
| | **Accessory Uses** | | | | | | | | | | | | | | | | | | | |
| 54a | Customary home occupation or office provided no more than two non-residents on the site: Comprising not more than 25% of floor area of one story of the dwelling unit | X | X | X | X | X | X | X | X | _ | _ | _ | X | X | X | X | _ | | | |
| 54b | Customary home occupation or office provided no more than two non-residents on the site: Comprising not more than 25% of the floor area of the dwelling unit | P | P | P | P | X | X | X | X | _ | _ | _ | P | _ | _ | _ | _ | Section 11.6 | | |
| | | | | | | | | | | | | | | | | | | | | |
| 55 | Accessory structure such as but not limited to private garage, playhouse, greenhouse, tool shed, security gatehouse or private swimming pool for use of occupants of the premises and which is 900 sq. ft. or less in size and has no door(s) exceeding 8' in height (amended 4/19/2018) | X | X | X | X | X | X | X | X | X | X | X | X | X | X | X | _ | | | |
| 56 | Accessory structure such as but not limited to private garage, playhouse, greenhouse, tool shed, security gatehouse or private swimming pool for use of occupants of the premises and which is larger than 900 sq. ft. in size and/or has door(s) exceeding 8' in height (amended 4/19/2018) | P | P | P | P | P | P | P | P | P | P | P | P | P | P | P | _ | | | |

For each zoning district:
"X" is a by right use
"P" requires a special permit
"-" is not permitted use

Section 5.1
Table of Use Regulations

| | | R-1 | R-2 | R-3 | R-4 | B-N | B-H | B-D | B-I | I-P | IP-2 | I-G | S-1 | S-2 | 0-P | OP-93 | 0-S | Notes; other sections | Special Permit Requirements in addition to | Site Plan Requirements |
|---|---|---|---|---|---|---|---|---|---|---|---|---|---|---|---|---|---|---|---|---|
| 57 | Accessory storage of one trailer, one unregistered automobile or one boat | X | X | X | X | X | X | X | X | X | X | X | X | X | X | X | _ | Note 9 | | |
| 57a | Acccessory Storage or Parking of Storage Container, Storage Trailer, Commercial Trailer or Semi Trailer, one or more (amended 6/27/2005) | _ | _ | _ | _ | P | P | P | P | P | P | P | P | P | P | P | _ | Note 17 | | |
| 57b | Accessory storage or parking of commercial motor vehicles other than as provided for in line 58, trucks, buses or contractors' equipment | _ | _ | _ | _ | P | P | P | P | P | P | P | P | P | P | P | _ | | | |
| 57c | Construction trailer used in conjunction with an ongoing building permit | X | X | X | X | X | X | X | X | X | X | X | X | X | X | X | _ | | | |
| 57d | Accessory Diagnostic Imaging Trailer (amended 4/8/2004) | _ | _ | _ | _ | P | P | P | P | P | P | P | P | P | P | P | _ | Note 7 | | |
| 58 | Parking of no more than one vehicle used by resident in connection with a business | X | X | X | X | X | X | X | X | X | X | X | X | X | X | X | _ | Note 10 | | |
| 59 | Accessory repair and interior storage facilities in a business or industrial establishment | _ | _ | _ | _ | X | X | X | X | X | X | X | _ | X | X | X | _ | Note 11 | | |
| 60 | Accessory outside storage necessary to the operation and conduct of a permitted business or industrial use | _ | _ | _ | _ | X | X | X | X | X | X | X | _ | X | X | X | _ | Note 6 | | |
| 61 | Accessory retail or consumer service uses in apartment dwelling, office building, industrial building or hospital | _ | _ | _ | X | X | X | X | X | X | X | X | _ | X | X | X | _ | Note 4 | | |
| 62 | The renting of not more than two rooms without kitchen facilities within a dwelling unit | _ | _ | X | X | _ | _ | X | _ | _ | _ | _ | X | _ | _ | _ | _ | | | |
| 63 | Accessory off-street parking and loading facilities as required by this Ordinance | X | X | X | X | X | X | X | X | X | X | X | X | X | X | X | _ | Section 8.0 | | |
| 63a | Drive-up Customer Service Facility (added 7/282/003 | _ | _ | _ | _ | _ | P | P | P | P | P | P | _ | P | P | P | _ | Section 11.6 | | |
| 64 | Coin operated recreational or entertainment machine located in either a public or private building (amended 2/25/2003) | P | P | P | P | X | X | X | X | X | X | X | X | X | X | X | _ | Note 22 | | |
| 65a | Accessory racquet sports facilities, indoor or outdoor | _ | _ | _ | _ | _ | X | X | X | X | X | X | _ | X | X | X | _ | | | |
| 65b | Accessory muscular therapy facility (amended 6/26/2007 | _ | _ | _ | _ | _ | X | X | X | X | P | X | _ | X | X | X | _ | Note 18 | | |
| 66 | Accessory uses in conjunction with scientific research | _ | _ | _ | _ | _ | _ | _ | _ | P | P | P | _ | P | P | P | _ | | | |
| | **Other uses** | | | | | | | | | | | | | | | | | | | |
| 67 | Conservation of water, plants and wildlife in their natural state (amended 2/4/1997) | X | X | X | X | X | X | X | X | X | X | X | X | X | X | X | X | | | |
| 68a | Agriculture, horticulture, or floraculture: on parcels of five acres or greater (amended 2/4/1997) | X | X | X | X | X | X | X | X | X | X | X | X | X | X | X | P | | | |
| 68b | Agriculture, horticulture, or floraculture: on parcels of less than five acres (amended 2/4/1997) | P | P | P | P | P | P | P | P | P | P | P | P | P | P | P | P | | | |

For each zoning district:
"X" is a by right use
"P" requires a special permit
"-" is not permitted use

Section 5.1
Table of Use Regulations

| | | R-1 | R-2 | R-3 | R-4 | B-N | B-H | B-D | B-I | I-P | IP-2 | I-G | S-1 | S-2 | 0-P | OP-93 | 0-S | Notes; other sections | Special Permit Requirements in addition to | Site Plan Requirements |
|---|---|---|---|---|---|---|---|---|---|---|---|---|---|---|---|---|---|---|---|---|
| 69 | Extension or alteration of a non-conforming use | P | P | P | P | P | P | P | P | P | P | P | P | P | P | P | _ | | | |
| 70 | Reconstruction of a non-conforming use damaged by fire or other natural cause | P | P | P | P | P | P | P | P | P | P | P | P | P | P | P | _ | Section 7.6 | | |
| 71 | Commercial parking garage or parking lot (amended 4/25/2007) | _ | _ | _ | _ | _ | P | P | _ | P | P | P | _ | P | P | P | _ | See Definition, License Required | | |
| 72 | Parking area or facility to serve a use on a separate lot and located not more than 500 feet from the use | _ | _ | P | P | P | P | P | P | _ | _ | _ | P | P | P | P | _ | Section 8.3.2 | | |
| 73 | Accessory use for rental of trailers, automobiles and trucks | _ | _ | _ | _ | _ | _ | P | _ | _ | _ | _ | _ | _ | _ | _ | _ | | | |
| 74 | Satellite Receiving Dish - on ground | P | P | P | P | _ | _ | _ | P | P | P | P | _ | P | P | P | _ | | | |
| 75 | Carnival and/or Traveling Enterprises | P | P | P | P | P | P | P | P | P | P | P | P | P | P | P | _ | Note 14 | | |
| 76 | Retail business of any kind, nature or description, including, but not necessarily limited to, gas stations, convenience stores, super markets and department stores, which is or are open to the public for transaction of business prior to 5:00 a.m. or after 12 midnight. For purposes of this section only, restaurant, full-service and restaurant, fast food are not "Retail Business" | _ | _ | _ | _ | _ | _ | _ | _ | _ | _ | _ | _ | _ | _ | _ | _ | | | |
| 77 | Convenience Store/Supermarket/Variety Store where the hours of operation would be in excess of 7:00 a.m. to 10:00 p.m. or are open to the public for the transaction of business prior to 5:00 a.m. or after 12 midnight. For purposes of this section only, restaurant, full-service and restaurant, fast food are not "Retail Business" (adopted 4/18/1989 and line amended 5/21/1991) | _ | _ | _ | _ | _ | _ | _ | _ | _ | _ | _ | _ | _ | _ | _ | _ | | | |
| 78 | Temporary, modular, mobile structure, limited to 90 days duration in use, used in conjunction with, and accessory to, an established religious or not-for-profit institution or structure | X | X | X | X | X | X | X | X | X | X | X | X | X | X | X | _ | | | |
| | **Municipal Uses and Functions** | | | | | | | | | | | | | | | | | | | |
| 79 | Municipal Uses (added 11/20/1992; amended 2/7/1997) | P | P | P | P | P | P | P | P | P | P | P | P | P | P | P | P | | | |
| | **Adult Uses** | | | | | | | | | | | | | | | | | | | |
| 80a | Adult Uses: Adult Bookstore (added 9/3/1996) | _ | _ | _ | _ | _ | _ | _ | _ | _ | P | _ | _ | _ | _ | _ | _ | Note 19a | | |
| 80b | Adult Uses: Adult Cabaret (added 9/3/1996) | _ | _ | _ | _ | _ | _ | _ | _ | _ | P | _ | _ | _ | _ | _ | _ | Note 19a | | |
| 80c | Adult Uses: Adult Motion Picture Theater (added 9/3/1996) | _ | _ | _ | _ | _ | _ | _ | _ | _ | P | _ | _ | _ | _ | _ | _ | Note 19a | | |
| 80d | Adult Uses: Adult Paraphernalia Store (added 9/3/1996) | _ | _ | _ | _ | _ | _ | _ | _ | _ | P | _ | _ | _ | _ | _ | _ | Note 19a | | |
| 80e | Adult Uses: Adult Video Store (added 9/3/1996) | _ | _ | _ | _ | _ | _ | _ | _ | _ | P | _ | _ | _ | _ | _ | _ | Note 19a | | |
| | **Wireless Communications Link** | | | | | | | | | | | | | | | | | | | |
| 81a | Wireless Communications Link: Free-Standing, Exterior Wireless Communications Link (added 7/15/1997; amended 2/12/2019] | _ | _ | _ | _ | _ | _ | _ | _ | P | P | _ | _ | P | P | P | _ | Note 19 | | |

For each zoning district:
"X" is a by right use
"P" requires a special permit
"-" is not permitted use

Section 5.1
Table of Use Regulations

| | | R-1 | R-2 | R-3 | R-4 | B-N | B-H | B-D | B-I | I-P | IP-2 | I-G | S-1 | S-2 | 0-P | OP-93 | 0-S | Notes; other sections | Special Permit Requirements in addition to | Site Plan Requirements |
|---|---|---|---|---|---|---|---|---|---|---|---|---|---|---|---|---|---|---|---|---|
| 81b | Wireless Communications Link: Building-Mounted Wireless Communications Link (added 7/15/1997; amended 2/12/2019) | P | P | P | P | P | P | P | X | X | X | X | P | X | X | X | P | Note 19 | | |
| 81c | Wireless Communications Link: Indoor Wireless Communications Link (added 7/15/1997; amended 2/12/2019) | X | X | X | X | X | X | X | X | X | X | X | X | X | X | X | X | Note 19 | | |
| 82 | Body Art Establishments | _ | _ | _ | _ | _ | _ | _ | _ | _ | P | _ | _ | _ | _ | _ | _ | Note 19a | | |
| 83 | Wind Monitoring or Meteorological ("test" or "met") Tower (added 11/24/2009) | _ | _ | _ | _ | P | P | P | P | P | P | P | _ | | P | P | _ | Section 24 | | |
| 84 | Roof Top Wind Energy Facility (added 11/24/2009) | _ | _ | _ | _ | P | P | P | P | P | P | P | _ | | P | P | _ | Section 24 | | |
| 85 | Large Wind Energy Facility (added 11/24/2009) | _ | _ | _ | _ | P | P | P | P | P | P | P | _ | | P | | _ | Section 24 | | |
| 86 | Small Wind Energy Facility (added 11/24/2009) | _ | _ | _ | _ | P | P | P | P | P | P | P | _ | | P | P | _ | Section 24 | | |
| | **Solar Photovoltaic Systems** | | | | | | | | | | | | | | | | | | | |
| 87 | Roof-Mounted (added 3/29/2016) | X | X | X | X | X | X | X | X | X | X | X | X | X | X | X | - | Section 26 | | |
| 88 | Solar Carport/Canopy (added 3/29/2016) | - | - | - | - | - | - | - | - | X | X | X | - | - | X | X | - | Section 26 | | |
| 89 | Ground-Mounted, Small-Scale (added 3/29/2016) | - | - | - | - | - | - | - | - | X | X | X | - | - | X | X | - | Section 26 | | |
| 90 | Ground-Mounted, Medium-Scale (added 3/29/2016) | - | - | - | - | - | - | - | - | X | X | X | - | - | X | X | - | Section 26 | | |
| 91 | Ground-Mounted, Large-Scale (added 3/29/2016) | - | - | - | - | - | - | - | - | X | X | X | - | - | X | X | - | Section 26 | | |
| 92 | Off-Grid (added 3/29/2016) | X | X | X | X | X | X | X | X | X | X | X | X | X | X | X | - | Section 26 | | |
| 93 | Passive (added 3/29/2016) | X | X | X | X | X | X | X | X | X | X | X | X | X | X | X | - | Section 26 | | |
| 94 | Solar Thermal System (added 3/29/2016) | X | X | X | X | X | X | X | X | X | X | X | X | X | X | X | - | Section 26 | | |

**Notes to 5.1 Table of Use Regulations:**

1. In addition to the Special Permit requirements shown in 5.1, Special Permits may be granted for the following: Exception to screening requirements in buffer areas (6.2.6[6]); reconstruction of a non-conforming use or structures damaged by fire (7.6); Reduction in required off-street parking stalls for mixed uses (8.2.5); Driveway widths or minimum driveway radii requirements for multi-family dwellings and commercial projects: Exception for landscaping requirements for parking facilities (8.6.2), Reduction in required loading spaces for mixed uses (8.7.1); cluster development (10). (amended 10/6/2016)

2. The mobile home may be used as a dwelling unit, during reconstruction of a residence following a fire or other disaster, for no longer than twelve (12) months.

3. Site Plan Review required if gross floor area is greater than 15,000 square feet.

4. a. In the IP, OP and IG Zoning Districts such service uses shall be located entirely within the principal structure and shall not in the aggregate occupy more than twenty (20%) percent of the gross floor area of the principal structure.

   b. Such retail uses shall be located entirely within the principal structure and shall not in the aggregate occupy more than five (5%) percent or 2,500 sq. ft. or whichever is less, of the gross floor of the principal structure.

   (Note 4 amended 12/01/87, Note 4.b amended 9/1/92)

5. In office park districts, light manufacturing uses shall not occupy more than twenty-five (25) percent of the gross floor area of the principal structure.

6. Materials shall be completely enclosed by means of a solid fence or wall not less than eight (8) ft, in height, with the exception of entrances and exits.

7. No portion of the structure may be within two hundred (200) ft. of a residential structure.

8. No such use may be within one thousand five hundred (1500) ft. of a residential district.

9. The vehicle shall be stored either within a principal or accessory structure, or not less than fifty (50) ft. from any street line and within the side yard setbacks, and shall not be used for sleeping or dwelling purposes.

10. The vehicle shall not exceed a capacity of two tons or twelve passengers, and shall not be loaded with noxious, flammable or other dangerous materials or liquids.

11. The accessory facilities shall not occupy more than twenty-five (25) percent of the gross floor area, and shall not be located within fifteen (15) ft. of any street lot line unless separated by a solid wall.

12. Such uses shall not aggregate more than ten (10) percent of the gross floor area of the structure, and all materials, goods, activities and signs shall be confined completely within the structure.

13. Also refer to general revised ordinances for regulation of self service gas stations.

14. No carnival and/or traveling enterprise offering amusements and/or games or contests of chance, rides and exhibitions, or other forms of entertainment, shall be permitted in any zoning district in the City of Woburn without a Special Permit granted by the City Council. The number of events during any one calendar year shall be limited to three. The duration of any one event shall be no more than eight days or eight nights, any carnival operating on Sunday shall be limited to the hours between 11:30 a.m. and 6:00 p.m., which shall count as one full day and night of operation; the hours of operation are restricted to between 11:30 A.M. and 11:30 P.M. with no more than two events per Voting District Ward per calendar year, but in no event shall the total number of said events exceed three (3) per calendar year throughout the City. Any carnival operating on Sunday shall be limited to a six-day duration. Prior to the grant of a Special Permit hereunder, the applicant shall obtain liability insurance covering all aspects of the proposed enterprise sufficient to hold the City harmless from any and all claims. Documents evidencing such insurance shall be submitted to the Law Department and approved by the City Solicitor before the permit is granted. The applicant shall notify the Department of Inspectional Services, the Police Department and the Fire Department 14 days prior to the first operating date of the enterprise. This shall allow sufficient time for each of the above agencies to schedule inspections. Annual resident religious and/or church festivals which do not exceed three (3) days and are organized and conducted by church members and held on or adjacent to parish grounds are exempted from this ordinance upon a 30 day written notice to the Chief of Police and Chief of the Fire Department.
(amended 3/17/92, 1/19/93, 2/21/95, 3/21/95, 9/24/96)

15. (deleted 4/19/2018)

16. Where such establishment is a convenience store/supermarket or variety store a Special Permit is required where the hours of operation are in excess of 7:00 a.m. to 10:00 p.m. Transfer of ownership shall require City Council approval. Restaurant, full-service and Restaurant, fast food where hours of operation are in excess of 6:00 a.m. to 11:00 p.m. shall require a Special Permit. (added 11/17/87; amended 7/28/2003)

17. This Special Permit is to be granted for a period not to exceed one (1) year. ( added 12/1/92)

18. This accessory use is restricted to lines 16 and 17 of Recreational and Institutional uses. ( added 6/7/94)

19. All wireless communications links located on municipally owned property and structures, including monopoles shall require a special permit "P". Also, the commercial use of wireless communications links on conforming residentially zoned properties is prohibited. (added 7/15/97 numbered as passed)

19a. A) No exterior signs intended to be used incidental to or in connection with (or for advertising purposes or otherwise) any of such adult uses shall depict or show human beings, or likenesses of human beings, engaged in any form of sexual activity.

B) All of the uses described in paragraph a-e of Use #80 and #82 of Sec. 5.1 shall be subject to the following limitations on siting:

1. None of such uses may be located within one thousand feet of a residential zoning district.

2. None of such uses may be located within one thousand feet of a residential use; for purposes of this paragraph, a "hotel", "motel" or "inn" shall be deemed to be a residential use.

3. None of such uses may be located within one thousand feet of a public or private school, day care center or nursery school.

4. None such uses may be located within one thousand feet of a church, or other structure used in whole or in part, all the time or part of the time for religious or spiritual services.

5. None of such uses may be located within two thousand feet of a public park, playground, nursery school or day care center.

6. None of such uses may be located within two thousand feet of another use enumerated in paragraph a-e of Use #80 and #82 of Sec. 5.1 of the WZO.

7. None of such uses may be located within one thousand feet of any nursing home, senior center or elderly housing.

8. None of such uses may be located within one thousand feet of any facility where large numbers of minors regularly congregate, such as bowling alleys, ice cream shops, youth centers, recreational facilities, etc.

9. None of such uses may be located within one thousand feet of any establishment serving liquor to be consumed on the premises.

(Added 9/3/96, amended 5/22/2001)

19b. No MEDICAL MARIJUANA TREATMENT CENTER shall be allowed:

A. Within one thousand feet of a residential zoning district, public or private school, or church or other structure used in whole or in part all the time or part of the time for religious or spiritual services;
B. Within one thousand feet of any facility where large numbers of minors regularly congregate;
C. Within two thousand feet of a public park, public library, public playground, nursery school, licensed day care center or another Medical Marijuana Treatment Center.

The distance under this Note shall be measured in a straight line from the nearest point of the facility in question to the nearest point of the proposed Medical Marijuana Treatment Center.

(added 7/16/2015)

19c. No Marijuana Establishment shall be allowed on property where the proposed marijuana establishment is to be located within five hundred feet of a pre-existing public or private school providing education in kindergarten or any of grades 1 through 12. The distance under this Note shall be measured in a straight line from the nearest point of the facility in question to the nearest point of the proposed Marijuana Establishment. No Marijuana Establishment shall be allowed to cultivate, process or manufacture marijuana that is, in a manner that is, causes or contributes to a public nuisance. Public signs related to marijuana establishments shall comply with Section 13 of the 1985 Woburn Zoning Code, as amended. For the purposes of this zoning ordinance, the definitions as set forth in M.G.L. c.94G, Section 1, as may be amended from time to time, shall apply."

(added 3/21/2017)

20. Townhouse developments in R-1 and R-2 zoning districts shall comply with all application provisions as indicated in Section 14 of this Ordinance. While townhouse developments proposed in R-3 and R-4 zoning districts shall comply with the provisions indicated in Section 11.3.2 and 12.3.2. In addition, townhouse development densities and other dimensional requirements shall comply with the

provisions of their respective zoning districts, as indicated in Section 6.1 - Table of Dimensional Regulations. (added 6/19/96)

21. That there shall be a buffer zone of three hundred (300) feet between the facility and any residential zoning district boundary line. (Added 1/24/2000)

22. That if the number of coin operated recreational or entertainment machines located in either a public or private building is great than three (3) a special permit "P" shall be required in B-N, B-H, B-D, B-I, I-P, IP-2, S-1, I-G, O-P and OP-93 zoning districts and shall not be a permitted use "-" in all other zoning districts. (added 3/6/2003)

23. Pet Care Facility used as an accessory use to a retail pet store containing a minimum of 15,000 square feet of gross floor area providing day and overnight care for cats and dogs in a sound attenuated indoor facility containing non-operable windows located entirely within said retail pet store. A Pet Care Facility shall not be located within five hundred fifty (550) feet of a residential district nor shall any outside activities be allowed except bringing said animals to and from said Pet Care Facility. (added 9/29/2007)

24. Any use defined as "BL3" and "BL4" by the NIH Guidelines promulgated in the Federal Register on May 7, 1986 and any subsequent federal amendments shall not be permitted in the City of Woburn. (added 5/26/2009)

25. The Granting of a Special Permit for automobile and truck repair garages located in a S-1 Zoning District shall be subject to the following conditions:

    a. The repair facility shall have frontage on a State numbered road under the jurisdiction of MassHighway for design, construction, and maintenance as of January 1, 2012.
    b. The repair facility shall only be allowed at a location where a repair facility was once located;
    c. Repairs shall be limited to automobiles; No repairs shall be allowed on vehicles, SUVs and light trucks weighing in excess of 10,000 pounds.
    d. The square footage of the repair facility shall not exceed 2,000 square feet.
    e. No portion of the structure shall be located within forty (40) feet of a residential dwelling.
    f. Automobile and truck repair garages located in an S-1 Zoning District shall require a special permit from the City Council pursuant to the provisions of this Note 25 and the requirements of Section 11.
    g. The Council shall also impose such additional conditions of those specified in this Ordinance as it finds reasonably appropriate to safeguard the neighborhood or otherwise serve the purposes of this Ordinance, including but not limited to the following: Screening, buffers, or planting strip, fences, or walls, as specified by the Council modification of the exterior appearance of the structure; method and

time of operation, or extent of facilities; regulation of number and location of drives, accessways, or other traffic features, and off-street parking or loading, or other special features beyond the minimum required in the Ordinance.

h. All signage shall comply with the requirements of Section 13.

(added 1/31/2012)

26. 1. Restaurant Full Service/Fast Food located in an S-1 Zoning District shall be subject to the following conditions:
    a. The full service/fast food restaurant must be located in an office building containing a minimum of 50,000 square feet of gross floor area;
    b. Any fast food restaurant shall not be visible (including signage) from the exterior of the building. No fast food drive-up customer service facility shall be allowed;
    c. The office building shall have frontage on a State numbered road under the jurisdiction of Mass Highway for design, construction and maintenance as of January 1, 2012.

    2. Physical Fitness Training Facilities located in an S-1 Zoning District shall be subject to the following conditions:
    a. The Physical Fitness Training Facility must be located in an office building containing a minimum of 50,000 square feet of gross floor area;
    b. The office building shall have frontage on a State numbered road under the jurisdiction of Mass Highway for design, construction and maintenance as of January 1, 2012.

(added 9/22/2016)

27. Rooftop dining may be authorized by Special Permit from the City Council in the B-D (Downtown Business) zoning district if the conditions outlined in Section 11.6 are met. (added 2/8/2018)

**5.2 <u>Additional Use Regulations</u>**

1. General Requirements for All Districts

1) There shall be no use of a building, structure or land in any district for a purpose that creates a nuisance by reason of the emission of odors, waste, fumes, dust, smoke, vibration, noise, light, radiation, or other causes.

2) The open display or open storage of junk shall be prohibited in all districts, including, but not limited to more than one unregistered automobile, worn out, cast off, or discarded articles and materials which are ready for destruction or have been stored or collected for salvage or conversion into some other use. Any storage of such articles and materials shall be enclosed or screened so that they are not visible from adjacent streets or properties.

3) Within any district, no equipment or process shall be utilized in any use of land, buildings or structures which creates a nuisance by virtue of unreasonable noise, vibration, glare, fumes, or odors detectable to the normal senses off the lot. In the case of electrical interference, no equipment or process shall be used which creates unreasonable visual or audible interference in any radio or television receivers off the premises. No other noise, vibration, smoke, dust, odors, heat, glare, unsightliness, or other nuisance shall be produced which is discernable from other properties.

4) Access to the buildable portion of a lot shall be gained from a lot's legal street frontage only. Access to lots by so called "common driveways" or access easements shall be prohibited. (Added 8/24/2000; amended 3/29/2011)

5) The maximum residential density on any parcel in all districts, except for B-D and overlay districts, shall not exceed 20 units per acre. This density limitation shall not apply to Assisted Living, Assisted Living/Continuing Care, Congregate Elderly Apartments or Hospital, Extended Care uses. (Added 5/30/2018)

2. General Requirements for Residential Districts.

Within any residential district, all non-residential uses shall comply with the following:

All noise, odors, glare, or other objectionable features shall be controlled or otherwise contained within the premises, and all parking areas shall be effectively screened so as not to create any conditions which create a nuisance or otherwise adversely affect the health, safety, or welfare of the population within the district.

3. General Requirements for Business, Industrial, Mixed Use, and Office Park Districts.

Within any business, industrial, mixed use, or office park district, all uses shall comply with the following:

There shall be no nuisance created as a result of the emission of odors, fumes, dust, noise, smoke, vibration, radiation, or any other cause which would be or appear to be injurious, noxious, offensive, hazardous, or otherwise objectionable to the general neighborhood or to the City. Permits from the Mass. Division of Environmental Quality Engineering shall define acceptable limits for the effects of individual projects.

4. Uses of Land in Residential Districts as Access to Land in Non-Residential Districts (Business, Industrial, Mixed Use, and Office Park Districts).

No access through any lot in a residential district to any land in a non-residential district shall be permitted unless no alternate access is available, and the following conditions are met:

1) The land in the non-residential corridor district is adjacent to that in the residential district.

2) The width of the right of way is at least fifty-four (54) feet wide.

3) The right-of-way is at least seventy-five (75) feet from the adjoining lot lines in the residential district.

4) Screened areas fifteen (15) feet wide are provided in a buffer area on both sides of the right-of-way. The screened areas shall be densely planted with shrubs or trees which are at least five (5) feet high at the time of planting and shall not obstruct the view of oncoming traffic when entering or exiting from the property. The planted material, in all respects, shall be maintained in a healthy condition.

5) Lots of land which are in existence at the time of adoption of this ordinance and which, because of their configuration and as a result of the impossibility of complying with 5.4.1. 1) through 4) above, cannot be used for the uses permitted in the district in which they are located because of insufficient access, may be used in their entirety for the purposes of the adjacent residential district, and all provisions of this ordinance relating to the adjoining districts shall apply.

## 5.3 Requirements for Fences

1) No fence, retaining wall, screen or other method of separation shall be erected without a permit; however, no permit shall be required for the erection of a fence in a location in which a previously existing legally erected fence was maintained provided that the new fence is erected within thirty (30) days of the removal of the former fence and is not prohibited by state law or regulated by the Massachusetts State Building Code. No permit shall be required for the repair of a previously existing legally erected fence which is in broken or damaged condition including the replacement of the fence, or a section thereof, with a new fence provided that the fence is not prohibited by state law or regulated by the Massachusetts State Building Code. [amended 11/24/2008]

2) No fence shall be built or maintained within the street setback requirements or the setback of the existing building over 3 feet high from the sidewalk or street level.

3) [deleted 11/24/2008]

4) The maximum height of any fence is 6 feet from the ground (except as provided in NOTE #6 of Notes to 5.1, TABLE OF USE REGULATIONS). (amended 12/5/89) .

5) The smoothest and best appearing side of a fence must face the abutting land unless otherwise approved in writing by the fence viewer.

6) A fence that has been painted or refinished or otherwise decorated that is not kept up and properly maintained shall not be allowed to stand.

7) No color combinations or other unnecessary configurations will be used to attract unnecessary attention or in the opinion of the fence viewer would lower the value or disrupt the harmony of adjacent property.

8) No permit will be issued for a fence that does not reasonably conform to the General Laws of the Commonwealth of Massachusetts.

**5.4 <u>Requirements for Swimming Pools</u>**

1. Permits shall be required for all permanent pools with a depth exceeding two (2) feet with a surface covering more than 100 sq. ft. or portable pools exceeding two (2) feet depth with 200 sq. ft.

2. All residential swimming pools shall be completely enclosed by a fence or wall no less than four (4) feet in height, which shall be so constructed as to not have any openings, holes or gaps larger than three (3.) inches in any dimension except for doors and gates. A dwelling house or accessory building may be used as part of such enclosure. A swimming pool having sides above the ground a minimum of four (4) feet shall not require an enclosure provided that it is equipped with a ladder that can be made inaccessible below four (4) feet above the ground when the swimming pool is not in actual use.

   All door or gate openings through such enclosure shall be equipped with a self-closing and self-latching device for keeping said door or gate securely closed at all times when the gate is not in actual use, except that the door of any dwelling which forms a part of the enclosure need not be so equipped. Such self-closing and self-latching device shall be located at least four (4) feet above the ground.

   All swimming pools governed by this section shall be equipped with at least one life ring and a rescue hook.

   This section shall be applicable to all new residential outdoor swimming pools hereafter constructed.

3. All public or semi-public swimming pools, as defined in the State Sanitary Code, shall comply with the fence enclosure requirements established in the State Building Code. (Amended 5/1/89)

**5.5 <u>Earth Removal or Filling</u>**

1) The removal or filling of loam, soil, clay, sand, borrow, gravel, stone, or any other

earth product, earth constituent or earth material from any land in the City of Woburn not in public use is hereby prohibited except such removal or filling as may be permitted in any zoning district by Special Permit as the Woburn City Council by vote may direct the Building Commissioner to issue, and except such removal as is permitted by Paragraph 7 of this section.

2) Written application for each special permit or renewal thereof shall be made to the Woburn City Council, and no special permit or renewal thereof, shall be issued without such application, and a public hearing thereon before the City Council, with due notice given.

3) Each such application shall include a diagram to scale of the area concerned, showing the boundaries of the whole of the property for any part of which a special permit is sought, the existing and proposed ground elevations in the land proposed to be excavated or filling, the means of storm water drainage of such excavation and the site lines of the existing public and private ways nearest the property for

which such permit is sought. In addition, the boundary lines shall be properly marked on the site in a suitable manner for viewing by the Building Commissioner.

4) Notice of each such public hearing shall be given at the expense of the applicant once in each of two successive weeks the first publication not being less than 21 days before the day of such hearing in a newspaper published in or for general circulation in Woburn.

5) Each copy of any earth material removal or filling permit voted by the City Council shall state all of the conditions imposed, if any, including but not limited to the following limitations of such removal as to: extent of time; area and depth of excavation of fill; steepness of slopes excavated or filled; distance between edge of excavation or fill and neighboring properties or ways; temporary or permanent drainage; posting of security bond; the replacement of not less than 6 in. of top soil over the whole of any area from which earth materials are removed where the location of such removal is afterward to become a residential subdivision; or in the case of continuing sand or gravel pit or filling operations in one general locus, recovering the finished cut banks with a minimum of 4 in. of top soil.

6) A copy of the City Council vote on each application, whether for issuance or for denial thereof, shall be mailed by the City Clerk to the parties of interest, and the Building Commissioner, not later than 5 business days after the date of such Council vote.

6) This regulation shall be deemed not to prohibit the removal or filling of such loam, gravel, soil, clay, sand or stone as may be required to be excavated for the purpose of constructing foundations for buildings or other allowable structures or site preparations as detailed on the plan for which building permits have been issued,

or for the purpose of constructing utilities or other engineering works for public service. Nor shall this regulation be deemed to prohibit the transferral of loam, soil, clay, sand, gravel or stone from one part of a lot, tract, or parcel of land to another part of the same lot, tract, or parcel of land in the same ownership. This regulation shall not be deemed to apply to filling of such loam, gravel, soil, clay, sand or stone where the material shall be used to fill an in ground swimming pool of a size no greater than twelve feet in depth and with a surface area of no greater than 800 square feet, however a building permit shall be required and such material shall be subject testing and approval by the Board of Health. This regulation shall not be deemed to apply to filling of such loam, gravel, soil, clay, sand or stone when the total amount of loam, gravel, soil, clay, sand or stone to be used for fill is less than or equal to one hundred (100) yards, however a building permit shall be required and such material shall be subject to testing and approval by the Board of Health, and further in order to calculate the total fill the filling operation shall be calculated as a total project and shall not be divided into smaller deliveries. (Amended 10/29/2001)

8) Any person violating any of the provisions of this Section 5.21 shall be fined not more

than Five Hundred ($500.00) nor less than Two Hundred ($200.00) dollars for each offense. Each day that willful violation continues shall constitute a separate offense.

## 5.6 Wireless Communication Link/Special Permit Application Requirements and Guidelines

1. Purpose:

To minimize the adverse impact of wireless communication links on adjacent properties and residential neighborhoods, and to minimize the overall number and height of such links to only what is essential and to promote shared use of proposed and existing links, thereby reducing the need for new facilities.

2. General Requirements:

a. No wireless communications links, which shall include monopoles, satellite dishes over three (3) feet in diameter or antennae shall be erected or installed, except in compliance with the provisions of this Section and other sections of this zoning ordinance that pertain to wireless communications links, i.e. Section 2, Section 5.1, Line 80 (a), (b) and (c), and Section 6.2.9.

b. Wireless communications links are prohibited from using conservation land as defined in M.G.L., CH 40, Sec. 8c.

c. Only free-standing monopoles, with associated antennae and/or panels are allowed as specified in Paragraph 4 below. Lattice style towers and similar facilities requiring three (3) or more legs and/or guy wires for support are not allowed.

d. Whenever possible, wireless communications links shall be located in non-residential zoning districts and shall be suitably screened from abutters and residential neighborhoods.

e. Structures shall be removed within six (6) months of cessation of use. If applicable, annual certification demonstrating continuing compliance with the standards of the Federal Communications Commission, Federal Aviation Administration and the American National Standards Institute and required maintenance shall be filed with the Building Commissioner by the Special Permit holder or the owner/petitioners of the subject property.

3. Application Process:

All applications for wireless communications links shall be completed in accordance with the following requirements. If a Special Permit is required, the application must further comply with Section 11 of the Zoning Ordinances:

a. A locus plan shall be submitted, at a scale of one (1) inch equal to one-hundred (100) feet, showing the exact location of the proposed wireless communications link, all property lines, zoning district lines, commercial and residential structures and streets within five-hundred (500) feet of the subject property. The petitioner must include a legend on the plan indicating dimensional requirements for the proposed use.

b. If a wireless communications link includes the erection of a monopole, a color photograph or rendition of the proposed monopole, with its associated antennae and/or panels shall be submitted, together with a site plan showing associated equipment shelters, parking, fencing and landscaping. For satellite dishes and residential antennae, a color photograph or rendition illustrating these items at their respective locations shall be submitted, together with a plot plan showing dishes, antennae, and other structures on the lot. A rendition shall also be prepared illustrating a view of the monopole, dish or antenna from the nearest street or streets. The fore mentioned site and plot plans shall be drawn at one (1) inch equal forty (40) feet.

c. In regard to wireless communications links that include the erection of monopoles, the following information shall be prepared by the project engineer:

1. A description of the monopole and the technical, economic and other reasons for the proposed location, height and design.

2. Confirmation that the monopole complies with all applicable Federal and State Standards.

3. A description of the co-location capacity of the monopole, including the number and type of panels, antennae and/or transmitter receivers and equipment shelters that it can accommodate, together with the basis for these calculations. To the extent technologically practicable, the applicant shall also provide information concerning the foreseeable industry growth needs for the proposed monopole use for the succeeding ten (10) years.

4. In all cases, other than indoor wireless communications links allowed by right, a written statement shall be included with the application, indicating that the proposed wireless communications link complies with applicable regulations administered by the Federal Aviation Administration (FAA), Federal Communications Commission (FCC), Massachusetts Aeronautics Commission and the Massachusetts Department of Public Health.

4. Design Guidelines:

The following guidelines shall be used when preparing plans for the siting and construction of all wireless communications links:

a. All monopoles shall be constructed at the minimum height necessary to accommodate the anticipated and future use(s). For abutting residential lot lines, the setback of a monopole shall be at least equal to the height of the monopole. For all other zoning districts, monopoles and their associated structures shall comply with structural setback requirements for the respective zoning districts.

b. No monopole shall be constructed which requires guy wires. Also, monopoles shall not be located on buildings.

c. Antennae or dishes located on non-residential buildings shall not exceed fifteen (15) feet in height above the roof top of the structures, exclusive of a parapet.

d. All wireless communications links shall be sited in such a manner that the view of the facility from adjacent abutters, residential neighbors and other areas of the city shall be as limited as possible. All antenna systems and dishes shall be painted or otherwise colored so they will blend in with the landscape of the structure on which they are located. Monopoles shall also be painted, or otherwise colored, so they blend in with the surrounding landscape. A different coloring scheme shall be used to blend the link structure (s) with the landscape below and above the tree or building line. Any antenna or dishes must be fifteen (15) feet set back from sides of all buildings.

e. Satellite dishes and/or antennae shall be situated on or attached to a structure in such a manner that they are screened, preferably not being visible from abutting streets. Free standing dishes or antennae shall be located on the landscape in such a manner so as to minimize visibility from abutting streets and residences and to limit the need to remove existing vegetation. All equipment shall be colored, molded and/or installed to blend into the structure and/or the landscape.

f. Wireless communications links shall be designed to accommodate the maximum number of users technologically practical. The intent of this requirement is to reduce the number of facilities which will be required to locate within the community.

g. An applicant proposing to locate a wireless communications link allowed by right "X" in a residential zoning district shall prove to the Building Commissioner's satisfaction, that the visual, economic and aesthetic impacts of the facility on residential abutters will be minimal, and that the facility must be located on the proposed site due to technical or other unique circumstances. The foregoing siting and design requirements shall also pertain to wireless communications links requiring a Special Permit, except that the jurisdiction of determining the satisfaction of same shall be by two-thirds (2/3) affirmative vote of the City Council.

   Further, a monopole shall not be setback closer than its height relative to any abutting residential lot line.

h. A fence, a minimum of six (6) feet in height, shall be provided around the perimeter of stand alone wireless communication links.

5. Criteria for Granting Wireless Communications Links Requiring a Special Permit:

a. Applications for Special Permits shall be approved as submitted or approved with modifications and/or conditions, if the petitioner can fulfill the requirements of these regulations and those contained in Section 11.5 of the zoning ordinance. In addition, the petitioner must also receive a two-thirds (2/3) affirmative majority vote of the City Council.

b. Applications for Special Permit may be denied if the petitioner can not fulfill or address the requirements of these regulations and those of said Section 11.5.

c. When considering a Special Permit application for a wireless communications link, the City Council shall place great emphasis on the proximity of the link to residential dwellings and its impact on these residences. New facilities shall only be considered after a finding that existing (or previously approved) facilities can not accommodate the proposed use(s).

(added 7/15/97)

## 5.7 Buffer Requirements

1. Along each boundary of a Mixed Use or Business district other than Business Interstate which adjoins any Residential district in the City of Woburn there shall be a buffer zone of twenty (20) feet in addition to the minimum side and rear yard setbacks.

2. Along each boundary of an Industrial (I), Office Park (OP), or Business Interstate (BI) district which adjoins any Residential district in the City of Woburn there shall be a buffer zone of seventy (70) feet in addition to the minimum side and rear yard setbacks.

3. If the buffer zone requirement in Section 5.7.1 or 5.7.2 above is triggered by a rezoning of Industrial (I), Office Park (OP), or Business Interstate (BI) to Residential (R-1, R-2, R-3 or R-4) that occurs after (September 25, 2015), the burden of providing the buffer zone shall be imposed on the property rezoned. The City Council may waive or vary the imposed buffer zone requirement by special permit if it determines that:

    1. Existing or proposed alternative screening devices such as fences, evergreen plantings and earthen berms will provide a reasonable buffer between incompatible land uses;

    2. Waiving or varying the buffer zone requirement will not substantially impact the comfort, privacy, quiet enjoyment and standard of living of residents in the property rezoned; and

    3. The nature or circumstances of the particular lot, project or neighborhood justifies a different buffer requirement, including but not limited to topography, soils, or other site conditions which make the planting or maintenance of the buffer impractical.

    Alternative screening devices authorized under this Section shall not be subject to the provisions of Sections 5.3.2, 5.3.4, or 5.7.7., except that the City Council shall insure that any plantings required by this Section do not interfere with or encroach upon sight lines or violate other provisions of the Woburn Municipal Code, Woburn Zoning Code or the Woburn Land Subdivision Rules and Regulations.

4. The buffer zones required by this section 5.7 shall, except to the extent provided in Section 5.7.3 or 5.7.5, extend from the zoning district boundary line into the mixed use, Business, Industrial or Office Park district, whichever the case may be.

5. If the boundary line between an "I" or ”OP” district and an ”R" district falls within or along a Road (as defined below) which is located either in the ”R" district or in both the ”R" district and the ”I" or "OP" districts, that portion of any such Road in the ”R” district from the centerline of the Road to the zoning district boundary line shall be

included to meet this seventy (70) foot buffer zone requirement. For purposes of this Section 5.7, Road means any road, street, highway or other public way or way devoted to public use including the untraveled portion of any layout for any such road, street, highway or other way, but shall not include a "paper' street.

6. The buffer zone may be used for the following purposes:

    1. To calculate the Minimum Usable Open Space percentages required in Section 6.1;

    2. For driveways, useable open space, walkways and landscaped areas;

    3. Overnight parking of passenger vehicles, except that no portion of the buffer area within fifty (50) feet of the boundary line of a Residential district may be used for such purposes.

7. The buffer zone shall contain a screen of evergreen plantings along the full extent of its border with the residential district and at least ten (10) feet from such border. In the case of a buffer along a Road, the plantings must be at least ten (10) feet from the edge of the Road. Such evergreen plantings shall be not less than three (3) feet in width and six (6) feet in height at the time of occupancy of such lot, and shall thereafter be maintained by the owner or occupants so as to maintain a dense screen year round. Other alternative screening devices may be permitted by Special Permit where topography, soils, or other conditions make the planting or maintenance of such a hedge impracticable.

(Added 2/23/2001; amended 11/12/2015)

### 5.8 Marijuana Establishments Forbidden

The operation of any marijuana establishment, as defined in G.L. c. 94G, § 1, including, without limitation, a marijuana cultivator, marijuana testing facility, marijuana product manufacturer, marijuana retailer or any other type of licensed marijuana-related business, is prohibited in all zoning districts of the City. This prohibition shall not apply to the sale, distribution or cultivation of marijuana for medical purposes licensed under Chapter 369 of the Acts of 2012. (added 9/21/2017; amended 1/24/2019; See former 5.8 added 2/21/2013, deleted 1/24/2019)

**********

[This page intentionally left blank]

# SECTION 6

# DIMENSIONAL REGULATIONS

Regulations for each district pertaining to minimum lot size, lot area per dwelling unit, minimum lot width, maximum height of buildings, maximum floor area ratio and other dimensional requirements are specified in this section as set forth in Section 6.1, Table of Dimensional Regulations and in Section 6.2.

(See following pages.)

Section 6.1
Table of
Dimensional Regulations

| **District** | **Use** | **Lot Size Minimum** | **Lot Width Minimum** | **Street Frontage Minimum** | **Front Yard Setback** | **Side Yard Setback** | **Rear Yard Setback** | **Landscaped Useable Open Space** | **Height Feet** (Note 1) | **Height Stories** (Note 1) | **Building Ground Coverage** | **Floor Area Ratio** |
|---|---|---|---|---|---|---|---|---|---|---|---|---|
| R-1 | Single Family Detached | 12,000 sf | 60 feet | 100 feet | 25 feet | 12 feet | 30 feet | 50% | 35 feet | 2 1/2 | 25% | _ |
| R-1 | Other Permitted Use | 15,000 sf | 60 feet | 125 feet | 25 feet | 25 feet | 30 feet | 50% | 35 feet | 2 1/2 | 25% | _ |
| R-1 | Townhouse Development | 18 acres | 60 feet | 125 feet | 75 feet | 50 feet | 50 feet Section 14 | per | 35 feet | 2 1/2 Section 14 | per | N/A |
| R-2 | Single Family Detached Dwelling | 12,000 sf | 60 feet | 100 feet | 25 feet | 12 feet | 30 feet | 50% | 35 feet | 2 1/2 | 25% | _ |
| R-2 | Two Family Dwelling by Conversion of Single Family Dwelling | 10,000 sf | 60 feet | 80 feet | 25 feet | 20 feet | 30 feet | 50% | 35 feet | 2 1/2 | 25% | _ |
| R-2 | Two Family Dwelling by New Construction | 15,000 sf | 60 feet | 100 feet | 25 feet | 20 feet | 30 feet | 50% | 35 feet | 2 1/2 | 25% | _ |
| R-2 | Other Permitted Use | 15,000 sf | 60 feet | 125 feet | 25 feet | 20 feet | 30 feet | 50% | 35 feet | 2 1/2 | 25% | _ |
| R-2 | Townhouse Development | 18 acres | 60 feet | 125 feet | 75 feet | 50 feet | 50 feet Section 14 | per | 35 feet | 2 1/2 Section 14 | per | N/A |
| R-3 | Townhouse or Garden Apartment: First Unit (amended 5/25/2000, 7/27/2000) | 12,000 sf | 40 feet | 100 feet | 25 feet | 25 feet | 30 feet | 50% | 35 feet | 2 1/2 | 25% | _ |
| R-3 | Townhouse or Garden Apartment: Each Additional Unit (amended 5/25/2000, 7/27/2000) | 5,000 sf | 40 feet | 100 feet | 25 feet | 25 feet | 30 feet | 50% | 35 feet | 2 1/2 | 25% | _ |
| R-3 | Other Permitted Use (amended 5/25/2000, 7/27/2000) | 12,000 sf | 40 feet | 100 feet | 25 feet | 25 feet | 30 feet | 50% | 35 feet | 2 1/2 | 25% | _ |
| R-4 | Apartment: First Unit (amended 5/25/2000, 7/27/2000) | 12,000 sf | 40 feet | 100 feet | 25 feet | 25 feet (Note 2) | 30 feet (Note 2) | 40% | 80 feet | 7 | 30% | _ |
| R-4 | Apartment: Each Additional Unit (amended 5/25/2000, 7/27/2000) | 4,000 sf | 40 feet | 100 feet | 25 feet | 25 feet (Note 2) | 30 feet (Note 2) | 40% | 80 feet | 7 | 30% | _ |
| R-4 | Other Permitted Use (amended 5/25/2000, 7/27/2000) | 12,000 sf | 40 feet | 100 feet | 25 feet | 25 feet | 30 feet | 40% | 35 feet | 2 1/2 | 30% | _ |
| S-1 | Apartment: First Unit | 12,000 sf | 40 feet | 100 feet | 25 feet | 25 feet | 30 feet | 20% | 35 feet | 2 1/2 | 40% | _ |
| S-1 | Apartment: Each Additional Unit | 2,500 sf | 40 feet | 100 feet | 25 feet | 25 feet | 30 feet | 20% | 35 feet | 2 1/2 | 40% | _ |
| S-1 | Other Permitted Use | 12,000 sf | 40 feet | 125 feet | 25 feet | 25 feet | 30 feet | 20% | 35 feet (Note 5) | 2 1/2 (Note 5) | 40% | _ |

Section 6.1
Table of
Dimensional Regulations

| **District** | **Use** | **Lot Size Minimum** | **Lot Width Minimum** | **Street Frontage Minimum** | **Front Yard Setback** | **Side Yard Setback** | **Rear Yard Setback** | **Landscaped Useable Open Space** | **Height Feet** (Note 1) | **Height Stories** (Note 1) | **Building Ground Coverage** | **Floor Area Ratio** |
|---|---|---|---|---|---|---|---|---|---|---|---|---|
| S-1 | Townhouse Development:First Unit (added 7/10/1998, amended 5/25/2000, 7/27/2000) | 12,000 sf | 40 feet | 100 feet | 25 feet | 25 feet | 30 feet | 50% | 35 feet | 2 1/2 | 25% | _ |
| S-1 | Townhouse Development: Each Additional Unit (added 7/10/1998, amended 5/25/2000, 7/27/2000) | 5,000 sf | 40 feet | 100 feet | 25 feet | 25 feet | 30 feet | 50% | 35 feet | 2 1/2 | 25% | _ |
| B-N | Townhouse Development: First Unit (added 10/9/1998, amended 5/25/2000, 7/27/2000) | 12,000 sf | 40 feet | 100 feet | 25 feet | 25 feet | 30 feet | 40% | 35 feet | 2 1/2 | 30% | _ |
| B-N | Townhouse Development: Each Additional Unit (added 10/9/1998, amended 5/25/2000, 7/27/2000) | 4,000 sf | 40 feet | 100 feet | 25 feet | 25 feet | 30 feet | 40% | 35 feet | 2 1/2 | 30% | _ |
| B-N | Any Permitted Use | 12,000 sf | 40 feet | 125 feet | 25 feet | 25 feet | 15 feet | 5% | 35 feet | 2 1/2 | 33% | _ |
| B-H | Any Permitted Use | 12,000 sf | 40 feet | 125 feet | 25 feet | 25 feet | 15 feet | 5% | 35 feet | 2 1/2 | 33% | _ |
| B-D | Any Permitted Use (amended 2/14/2001) | None | 40 feet | 50 feet | _ | _ | 0 | 0 | 40 feet (Note 3) | 3 | 100% | _ |
| B-I | Any Permitted Use (amended 4/3/2000, 4/18/2000) | 12,000 sf | 40 feet | 125 feet | 25 feet | 25 feet | 30 feet | 15% | 80 feet (Note 8) | 7 (Note 8) | – | .50 (Notes 4, 5, 6, 7) |
| I-P | Any Permitted Use (amended 4/3/2000, 4/18/2000) | 40,000 sf | 40 feet | 125 feet | 25 feet | 25 feet | 25 feet | 30% | 80 feet (Note 8) | 7 (Note 8) | – | .50 (Notes 6, 7) |
| IP-2 | Any Permitted Use (amended 4/3/2000, 4/18/2000, 8/27/2001) | 40,000 sf | 40 feet | 125 feet | 25 feet | 25 feet | 25 feet | 30% | 80 feet (Note 8) | 7 (Note 8) | – | .50 (Notes 6, 7) |
| I-G | Any Permitted Use | 10,000 sf | 40 feet | 100 feet | 20 feet | 20 feet | 20 feet | 10% | 35 feet | 3 | 50% | _ |
| O-P | Any Permitted Use (amended 4/3/2000, 4/18/2000) | 40,000 sf | 40 feet | 125 feet | 25 feet | 25 feet | 25 feet | 30% | 80 feet (Note 8) | 7 (Note 8) | _ (Note 4) | .50 (Notes 6, 7) |
| OP-93 | Any Permitted Use (added 8/24/2000) | 40,000 sf | 40 feet | 125 feet | 25 feet | 25 feet | 25 feet | 30% | 80 feet | 7 | – (Note 4) | .75 |

Section 6.1
Table of
Dimensional Regulations

| **District** | **Use** | **Lot Size Minimum** | **Lot Width Minimum** | **Street Frontage Minimum** | **Front Yard Setback** | **Side Yard Setback** | **Rear Yard Setback** | **Landscaped Useable Open Space** | **Height Feet** (Note 1) | **Height Stories** (Note 1) | **Building Ground Coverage** | **Floor Area Ratio** |
|---|---|---|---|---|---|---|---|---|---|---|---|---|
| S-2 | Elevator Apartments, Extended Care Facility, Congregate Elderly Housing:First Unit (added 5/24/2004) | 12,000 sf | 40 feet | 100 feet | 25 feet; 10 feet when property abuts interstate highway | 25 feet (Note 2); 10 feet when property abuts interstate highway | 30 feet (Note 2); 10 feet when property abuts interstate highway | 40% | 80 feet | 7 | 30% | _ |
| S-2 | Elevator Apartments, Extended Care Facility, Congregate Elderly Housing: Each Additional Unit (added 5/24/2004) | 4,000 sf | 40 feet | 100 feet | 25 feet; 10 feet when property abuts interstate highway | 25 feet (Note 2); 10 feet when property abuts interstate highway | 30 feet (Note 2); 10 feet when property abuts interstate highway | 40% | 80 feet | 7 | 30% | _ |
| S-2 | Other Permitted Use (added 5/24/2004) | 40,000 sf | 40 feet | 125 feet | 25 feet | 25 feet | 25 feet | 30% | 80 feet | 7 | – (Note 4) | .75 |
| O-S | Any Permitted Use | 12,000 sf | 40 feet | 100 feet | 25 feet | 12 feet | 30 feet | 90% | 35 feet | 2 1/2 | 10% | _ |

**Footnotes to 6.1 Table of Dimensional Regulations**

1. Excluding structured parking.

2. For each foot in height of a structure over two and one half stories or thirty-five (35) feet in height, a foot of side and rear setback is required in addition to the minimum requirements shown on the table.

3. Fifty (50) feet along Main Street from High Street south, in the S-1 zone.
.
4. Deleted 5/4/1992.

5. Maximum height of 80 ft on lots abutting Rehabilitation Way in S-1 zone. Maximum floor – 7. The Floor Area Ratio for a self-storage warehouse facility as defined in his Ordinance shall be 2.0. (Amended 2/4/1997, 5/6/1997, 6/5/2008).

6. Notwithstanding the above provisions, the following development sites shall remain exempt from same, in that by issuance of the necessary permits, as otherwise provided by these ordinances, and further, that such developments shall not exceed a 75% FAR nor have less than 20% minimum landscaped useable open space:

   (i) Inwood Office Park, a 50 plus acre tract of land, located off West Street in Wilmington, and bordering I-93 to the west, the town of Reading to the east, the town of Wilmington to the north and residential properties fronting along Dragon Court to the south.

   (ii) Unicorn Office Park, i.e., the remaining undeveloped parcel within the Park, located at the end of the cul-de-sac, and bordering I-93 to the west, 500 Unicorn Park to the east, 400 Unicorn Park to the south and residential properties along Salem Street in Woburn to the north.

   (Added 4/18/2000)

7. All developments existing prior to the date of adoption of the above amendments, which are located within the O-P, I-P, IP-2 and B-I districts shall remain conforming as to their existing FAR and minimum landscaped useable open space. However, future alterations, modifications, and/or extensions of said developments shall require the necessary permits as otherwise provided by these ordinances. (Added 4/18/2000)

8. Structures located in Office Park (OP), Industrial Park (IP), Industrial Park Two (IP-2), and Business Interstate (BI) zoning districts, which are within seven hundred (700) linear feet of Residential-One (R-1), Residential-Two (R-2) and Residential-Three (R-3) zoning district boundary lines in the City of Woburn, shall have a maximum height of thirty-five (35) feet and/or three (3) stories. Structures located in a Technology and Business Mixed Use Overlay District which are within 150 feet of Residential-One (R-

1), Residential-Two (R-2), and Residential-Three (R-3) zoning district boundary lines in the City of Woburn shall have a maximum height limit of 35 feet. Any variation from the foregoing height/story limitation shall require the issuance of a special permit by the City Council. (amended 9/8/2016)

Where there is a rezoning subsequent to September 25, 2015 that creates one or a combination of R-1, R-2, R-3 or R-4 zoning districts, then the seven hundred (700) foot linear distance shall be measured from the location of the residential zoning district boundary line as it existed on September 25, 2015. (added 10/6/2000; amended 11/12/2015)

9. Assisted Living residences located in the Residential-Three (R-3) zoning district boundary lines in the City of Woburn shall have a maximum height of 42 feet and/or 3 stories; Assisted Living residences located in the R-2, R-3, R-4, B-H, B-I, and S-1 zoning districts shall have a Minimum lot area of 1 acre; a Minimum Lot frontage of 125 feet; a Minimum side yard setback of 25 feet; a Minimum rear yard Setback of 30 feet; and that the maximum number of residential units shall be not more than 1 bedroom per 1,000 square feet of gross lot area not including the area assigned to rivers or canals that may be on the lot and that an Alzheimer room/bed shall be construed to be a bedroom. (added 12/19/2013)

**6.IA <u>Educational - Residential Facilities and Group Homes (780 C.M.R. 424.1)</u>**

1. Real estate and/or structures proposed to be used in accordance with General Laws Chapter 40A, Section 3, paragraph 2, and such court decisions interpreting said statute shall, in addition to 780 C.14.R. (State Building Code), be subject to the following regulations:

   BULK and HEIGHT of STRUCTURE. The structure shall not contain more than 2500 square feet of floor space excluding cellar, nor shall the structure be higher than 35 feet.

   LOT AREA. The lot on which the existing structure sits, or the lot on which the structure is proposed to be built, shall contain at least 15,000 square feet of land.

   SETBACKS. The existing structure or proposed structure shall have the following setbacks:

   a) from street - 25 feet;
   b) from rear lot line - 30 feet;
   c) from side lot line - 25 feet.

   PARKING. There shall be a paved area sufficient to accommodate one vehicle for each resident licensed to operate a motor vehicle, and for each staff person residing at the facility who is licensed to operate a motor vehicle.

BUILDING GROUND COVERAGE. The existing structure or structure proposed to be built shall not occupy more than 25% of the subject lot.

2. No Building Permit or Permit to Occupy or other permit shall be issued for purposes of establishing a facility to which this Section (6.lA) applies if there exists a like facility within 1500 linear feet.

3. Notwithstanding the foregoing, there shall be no more than 2 facilities to which this Section applies located within any one Ward.

4. If any subsection of this Section shall be deemed invalid, illegal or unconstitutional, the failure of said Section shall not affect the remaining Sections.

**6.2 <u>Additional Dimensional Regulations</u>**

1. Projections into Yards and other required open spaces: Projections into required yards, or other required open spaces are permitted subject to the following:

   1) Balcony or bay window: not more than 6 feet.

   2) Open terrace, or steps or stoop under 4 ft. in height: up to one-half the required yard setback.

   3) Steps or stoop over 4 ft. in height, window sill, belt course, chimney, roof eaves, fire escape, fire tower, storm enclosures, or similar architectural features: not more than 4 ft.

   4) Where balconies and/or patios are provided, one-half of the total area of such balconies and/or patios may be counted as usable open space in meeting the usable open space requirements specified herein.

2. Yard Setback Requirements

   1) Exception to Front Yard Requirements in Residential Districts:

      Maximum required setback is the average of the setbacks of the buildings on the two adjacent lots and the two lots adjacent to each of those lots, assuming minimum setback requirements are met on any of the aforementioned lots which are vacant.

   2) For the purpose of determining setback requirements for corner lots and through lots, yards that have frontage on streets shall be considered front yards.

   3) In addition to the setback requirements on Table 6.1, any non-residential use in a

residential district shall comply with the following requirements: No such structure nor parking, recreational, or other related facilities may be located within twenty-five (25) feet of a dwelling on an adjacent lot.

3. Dimensional Requirements for detached accessory structures in residential districts:

Minimum front yard setback: 25 ft.

Minimum side yard setback: 12 ft.
Minimum rear yard setbacks: 4 ft.
Maximum height: 20 ft.

4. Enclosures on corner lots:

A fence, hedge, wall, or other enclosure may be maintained on a corner lot, provided: it shall not obstruct visual clearance at intersecting streets by being between 3 ft. and 10 ft. above the grade within the triangular area formed by the intersection of the lot lines and a straight line joining said curb lines at points which are 16 ft. distant from point of intersection of said lot lines. (amended 2/3/2009)

5. Height Requirements

1) Public facility and public utility structures may be exempted from the maximum height requirements, provided:

The side and rear yard setbacks required in the district shall be increased by two (2) ft. for each foot by which the height of such structure exceeds the height permitted in the district.

2) Special industrial structures such as a cooling tower, grain elevator, sugar refinery, gasholder or other similar structure where the industrial process requires a greater height may be exempted from the maximum height requirement, provided: Any such structure shall not occupy more than 20 percent of the lot area, and shall not be less than 50 feet from any lot line.

6. Use of Areas Within Floodway or Flood Plain Districts to Meet Area and Yard Requirements.

The portion of any lot within an area designated as within a Flood Plain district as set forth in Section 9 may be used to meet the area and yard requirements in this section 6 for the district or districts in which the lot is located, provided the portion of the lot within the flood plain does not exceed twenty (20) percent of the minimum lot area as shown on a certified plot plan prepared by a Registered Professional Engineer or Registered Land Surveyor. (amended 2/23/2001)

7. Roadway Layout/Existing Dwelling Structures.

A new roadway being laid out adjacent to properties with existing dwellings shall maintain a minimum distance of 25 feet between those dwellings and the paved edge of the proposed roadway.

Previously approved subdivision "paper street" layouts are exempt from this dimensional requirement.
(added 9/l6/9l, amended 2/23/2001)

8. Dimensional Requirements for Wireless Communications Links:

Any wireless communications link shall comply with the dimensional requirements applicable to structures for the district in which it is located, provided, however, that the following additional height and dimensional limitations for wireless communications links involving monopoles, satellite dishes and antennae shall be as follows:

a. No monopole shall exceed the height required to effectively transmit and receive its wireless communications system requirements. Monopoles and associated structures shall comply with the structural setback requirements for the zoning districts upon which they are located. Except that a monopole shall not be setback closer than the height relative to any abutting residential lot line.

b. Wireless communications links installed on the exterior of roof tops shall not exceed fifteen (15) feet above the roof line, exclusive of the roof parapet. Any antenna or satellite dish shall have a fifteen (15) foot setback from all sides of the building.

c. The height of antennae and dishes located on residential buildings or in the yards of residential structures shall not exceed thirty-five (35) feet in height measured from the average ground elevation of the residential structure or the average ground elevation of the antenna and/or dish base. These link items shall also comply with structural setback requirements for their respective residential districts.

(added 7/15/97, amended 2/23/2001)

**********

[This page intentionally left blank]

# SECTION 7

# NON-CONFORMING USES

## 7.1 Application

This zoning ordinance shall not apply to structures or uses lawfully in existence or lawfully begun or to a building permit or special permit issued before the first publication of notice of the public hearing on such ordinance or ordinance change as provided in Chapter 40A, but shall apply:

1. to any change or substantial extension of such use.

2. to a building permit or special permit issued after the first notice of said public hearing.

3. to any reconstruction, extension or structural change of such structure and

4. to any alteration of a structure begun after the first notice of said public hearing to provide for its use for a substantially different purpose or for the same purpose in a substantially different manner or to a substantially greater extent, except where alteration, reconstruction, extension, or structural change to a single or two family dwelling does not increase the nonconforming nature of said structure.

   AND shall not apply :

5. to any construction of a deck, stairs, bulkhead or porch for a single or two-family dwelling, in a residential zone, unless the same would conflict with the Table of Dimensional Regulations, Section 6, above, in which case a special permit shall be required pursuant to Section 7.3 herein, except for small-scale additions per new subsection 7. (amended 6/13/2005; amended 8/20/2009)

6. to any addition or renovation to a single or a two-family dwelling on a residentially-zoned lot, unless the same would conflict with the Table of Dimensional Regulations, Section 6, above, in which case a special permit shall be required pursuant to Section 7.3 herein, except for small-scale additions per new subsection 7 . (amended 6/13/2005; amended 8/20/2009)

7. to any small-scale alterations, additions, or renovations to a single dwelling on a residentially zoned lot, which does not cause an intensification of the existing non conformity. In addition, there must be no further reduction of any legally existing setbacks and no further conflicts with the table of dimensional regulations (excluding ground coverage and useable open space). Examples of said small-scale alterations, additions, or renovations that do not cause an intensification of the non-

conformity are; attached garages, enclosed porches, decks and family rooms. (added 8/20/2009)

(amended 9/25/90; amended 8/20/2009)

**7.2 Purpose**

It is the stated purpose of this Section that nonconforming uses and structures are to be strictly regulated, and that the provisions of this ordinance will be construed and interpreted in the light most favorable to limiting the continuation of nonconforming uses and structures.

**7.3 Extension or Alteration of Non-conforming Uses**

Preexisting non-conforming structures or uses may be extended or altered, provided that no such extension or alteration shall be permitted unless there is a finding by the special permit granting authority that such change, extension or alteration shall not be substantially more detrimental than the existing nonconforming use to the neighborhood. In making the finding that the extension or alteration will not be substantially more detrimental, the special permit granting authority shall consider, without limitation, impacts upon the following: traffic volumes, traffic congestion, adequacy of municipal water supply and sewerage capacity, noise, odor, scale, character and visual effects.

Pre-existing non-conforming structures or uses shall not be extended or altered unless the petitioner provides proof that the pre-existing non-conforming structure or use was validly and legally established. (amended 12/10/2007; amended 12/3/2013)

Application to the special permit granting authority for such extensions or alterations shall be made in accordance with Section 11 of this ordinance and approvals shall require a two-thirds vote of the special permit granting authority.

For all applications concerning a pre-existing non-conforming structure or use that is a single family dwelling or a two family dwelling that is not seeking to change its use, the special permit granting authority shall be the Board of Appeals, and for all other applications concerning a pre-existing non-conforming structure or use, the special permit granting authority shall be the City Council.
(amended 9/25/90; amended 6/13/2005)

**7.4 Abandonment/Non-use**

No nonconforming use or structure shall be reinstated once it is abandoned or once it is not used for a period of two (2) year. (amended 1/18/2013)

**7.5** No nonconforming use, once changed to a use permitted in the district in which it is located, shall be changed back to a nonconforming use.

**7.6 <u>Reconstruction</u>**

1. No nonconforming use or structure which is damaged by fire or other natural cause to an extent of fifty (50) percent of its assessed value may be reconstructed except as a conforming structure or as a structure constructed on the same foundation as the damaged structure and of no greater height or exterior dimension than the damaged structure it replaces. However, if non-conforming structure is deemed a nuisance and ordered demolished by the City Council, a structure may be rebuilt on the property with the same dimensions, of no greater height and in the same place as structure being replaced, regardless of whether or not the foundation remains after structure is demolished; provided that the work be completed within eighteen (18) months of the declaration that the property is a nuisance by Order of the City Council. (amended 3/20/2003)

2. Reconstruction of a nonconforming use or structure which is damaged by fire or other natural cause to an extent of fifty (50) percent of its assessed value other than in a manner specified in Section 7.6.1 above shall require a special permit.

[This page intentionally left blank.]

# SECTION 8

# OFF STREET PARKING AND LOADING FACILITIES REGULATIONS

## 8.1 Applicability

1. No land shall be used and no building shall be erected, enlarged or used in any district in the city, except as provided in Section 8.1.2 and 8.1.3 below hereinafter, unless off-street parking and loading facilities are provided in accordance with the requirements of this section.

2. Structures and land uses in existence or for which building permits have been issued at the date of adoption of this ordinance shall not be subject to the requirements of Section 8 so long as the kind or extent of use is not changed so that the changed or enlarged use would require an increase of more than twenty-five (25) percent in the parking facilities required in this Section, whether such increase occurs at the time or in successive stages, provided that any parking facilities now serving such structures or uses shall not in the future be reduced below such requirements.

3. Whenever there is an alteration of a structure, addition of a new structure, or a change or extension of use which increases the parking requirements by twenty-five (25) percent or more according to the standards of Section 8, whether such increase occurs at one time or in successive stages, the total parking required for the entire structure or use shall be provided in accordance with the requirements of this section.

## 8.2 Numbers of Required Off-Street Parking Facilities

1. No reduction in the number of off-street parking stalls which are required by this section shall be allowed and no existing off-street parking stalls shall be eliminated unless replaced by an equal number of off-street parking stalls designed in accordance with the requirements of this section; except that the elimination of existing parking stalls which are in excess of the number required by this section is permitted.

2. All required parking facilities shall be provided and maintained so long as the use exists which the facilities were required to serve. Reasonable precautions shall be taken by the owner or operator of particular facilities to assure the availability of required facilities for the employees or other persons whom the facilities are designed to serve. Required parking stalls shall be used only for the purposes of providing parking for residents or occupants of the building which they serve.

3. Thirty (30) percent of the recommended number of off street parking spaces may be spaces for small or compact cars. Such stalls must be clearly identified by signs and/or markings as compact stalls.

4. The minimum number of parking stalls to be supplied for each type of building or land use shall be in accordance with the following requirements. Where the computation results in a fractional number, the fraction over one-half shall require one space.

5. Schedule of minimum numbers of Required Off Street Parking Stalls for following uses:

| USE | NUMBER OF OFF-STREET PARKING SPACES REQUIRED |
|---|---|
| Single or two family dwelling | Two per dwelling unit |
| Multi family dwelling | Two per dwelling unit (Amended from 1 1/2, December 5, 1989) |
| Hotel, motel or lodging house | One per sleeping room and one for each three employees on the largest shift. |
| Hospital, nursing home or other care facility | One per each three beds and one per each three employees on the largest shift. |
| Extended Care Facility | 1.8 space per dwelling unit, provided that Assisted Living residences shall have 0.70 space per unit and 1 visitor space per 10 units (added 5/24/2004, amended 12/19/2013) |
| Congregate Elderly Housing | 1.8 space per dwelling unit (added 5/24/2004) |
| Retail, financial institution or service establishment | One per 200 sq ft. of net floor area on the ground floor, and one per 350 sq. ft. of net floor area above and below the ground floor. (Amended 9/22/92) |
| Office or professional building, except medical | One per 350 sq. ft. of net floor area (Amended 9/22/92) |
| Medical Office Building | Four for each office used by a physician, doctor or other medical professional, and one for each three employees in any laboratory or pharmacy included in such building. |

| | |
|---|---|
| Storage warehouse and manufacturing facility | One for each three employees employed or anticipated to be employed on the largest shift; not less than one per 400 sq. ft. of net floor area in manufacturing, and not less than 1 per 800 sq. ft. in warehousing. (Amended 11/20/90 and 9/22/92) |
| Restaurant, full-service and Restaurant, fast food | 12 parking spaces per 1000 square feet of net floor area. (amended 4/28/2000; amended 7/28/2003) |
| Auditorium, theater or places of public assembly. | One for each three patron seats, and one for each three employees on the largest shift. (Amended (4/28/2000) |
| Cafeteria or other food service establishment intended to serve primarily the occupants of an office building or buildings or group of such buildings. | None in addition to the requirements of the office or industrial building or buildings. |
| Mixed Use | In the case of a combination in a single integrated development of two or more of the above uses, the City Council may give a special permit under the requirements of Section 11 to reduce the total number of required stalls but in no case may such reduction exceed one third of such total. |
| Automatic Teller Machine (ATM), Freestanding | 2 (5 minute) spaces for each ATM machine. Spaces must be located within 100 ft of the ATM machine. (added 7/28/2003) |
| Other uses | Spaces sufficient to accommodate on the site all users of the facility, as established through documentation submitted to satisfy special permit or site plan review requirements, whichever may apply, or if no such requirements apply, documentation to the satisfaction of the Building Commissioner. |

**8.3 <u>Off Street Parking Facilities Required</u>**

Off street parking facilities shall be provided on the same lot with the principal use, except that:

1. Within any R3, R4, Business, Mixed Use, Industrial, or Office Park district, the City Council, by Special Permit, may allow the parking facility requirements to be met on a lot separate from the use to be served, if such facilities are located within five hundred (500) feet of the use to be served, and if the City Council finds that suitable arrangements, such as ownership, long term lease or easement, have been made to assure the permanent provision of the parking facilities;

2. Within the B-D District, municipal parking facilities may be substituted for the required off street parking for non-residential uses, if such facilities are located within five hundred (500) ft. of the use to be served;

3. Within the B-D District, the City Council, by Special Permit, may allow municipal parking facilities to substitute for the required off street parking for residential uses under this Section if it imposes, as a condition of approval, the non-waivable fee required by Section 8.3.4 below and makes the following findings:

   a. That the municipal parking facilities are located within five hundred (500) feet of the use to be served;

   b. That the proposed combination of on-site, off-street parking spaces and municipal parking spaces is available and adequate to serve the proposed development; and c. That reliance on municipal parking facilities will not create an undue burden on the municipal parking facilities.

4. If a Special Permit is granted to allow municipal parking facilities to substitute for required off-street parking for residential uses in the B-D District, it shall be conditioned on the payment of a fee equal to Four Thousand Five Hundred Dollars ($4,500) for each space in a municipal parking facility that substitutes for a required off-street parking space. The City Council shall not have the authority to vary or waive the fee, either in whole or in part, for any project. The payment of a fee shall not act as a guarantee that future tenants of the residential development shall be entitled to the reservation or designation of a parking space or spaces.

   All such fees shall be deposited in a separate “Downtown Parking Enhancement Fund” to be established in the City Treasury and administered by the Treasurer/Collector. Funds deposited in this account shall only be used for costs incurred by the City in acquiring, designing, constructing and/or reconstructing land and facilities that increase the supply of parking within the B-D District. Expenditure of funds from this account shall only be authorized by a 2/3 vote of the City Council.

(amended 11/22/2013; amended 9/7/2017)

## 8.4 Design and Layout of Required Parking Facilities

1. Dimensions

    1. Parking stall, standard: minimum of nine (9) feet in width, eighteen (18) feet in length

    2. Parking stall, compact car: minimum of eight (8) feet in width, sixteen (16) feet in length

    3. Parking stall, retail; minimum of ten (10) feet in width, eighteen (18) feet in length

    4. Parking stall, handicapped: minimum of twelve (12) feet in width; eighteen (18) feet in length

2. Minimum and Maximum Entrance and Exit Driveway Widths:

    The term “entrance and exit driveway” as used in this Section shall mean the location at which the driveway meets the street, and shall not mean the driveway(s) interior to the site.

    Minimum Driveway Width: For both residential and commercial developments, the minimum driveway width shall be twelve (12) feet.

    Maximum Driveway Width: For residential and commercial developments, the maximum driveway width shall be as follows:

        Residential: Maximum driveway width of twenty-for (24) feet. For a detached two-family dwelling in the R-2 zoning district, the maximum driveway width serving the lot shall be forty-eight (48) feet. (amended 5/26/2009)

        Commercial Developments of less than 15,000 square feet: Maximum driveway width of twenty-eight (28) feet of pavement width, leading to an intersection having a radius of ten (10) feet.

        Commercial Developments of greater than 15,000 square feet: Maximum driveway width of twenty-eight (28) feet of pavement width, leading to an intersection having a radius of thirty (30) feet.

        Notwithstanding the provisions of this section, the maximum pavement width may be increased and/or the minimum required driveway radius may be reduced for multi-family dwellings and commercial developments only, if so authorized by Special Permit issued by the City Council pursuant to this Section 8.4.1.2 or if shown on a plan approved by either the City Council or the Planning Board.

Neither the City Council nor the Planning Board shall have the authority to modify the dimensional requirements for entrance and exit driveways servicing one-family and two-family dwellings.

Note: All driveways shall be subject to the additional regulations set forth in Section 5.2.4 hereof.

(Amended 9/30/1999; amended 10/6/2016; amended 4/4/2017)

4) Distance between driveways on a single lot: Minimum of fifty (50) ft. for a corner lot; thirty for an interior lot measured at the front lot line.

5) Distance between driveways and curb line of an intersecting street: Minimum of twenty five (25) ft., measured at the front lot line.

2. Setbacks

1) No parking stall shall be set back less than five (5) feet from a lot line.

2) No parking stall shall be permitted within the required front yard setback in any industrial, mixed use, office park, or multi family residential district, nor within five (5) feet of the front lot line in any business district.

3) Driveways shall be located so as to minimize conflict with traffic on public streets and where good visibility and sight distances are available to observe approaching pedestrian and vehicular traffic.

4) Parking facilities shall be designed so that each vehicle may proceed to and from the parking space provided for it without requiring the moving of any other vehicle, except for a parking facility providing valet parking or a parking facility in which spaces are assigned to occupants of the building served by the parking facility.

**8.5 <u>Lighting, Surfacing, and Maintenance</u>**

1. All parking facilities which are used at night shall have security lighting.

2. All artificial lighting shall be arranged and shielded so as to prevent glare from the light source onto adjacent streets and properties.

3. Parking facilities shall be surfaced, graded and drained to the satisfaction of the city engineer.

4. Parking facilities shall be surfaced with asphalt, concrete, or other durable material, except that less durable surfacing materials may be used on emergency access driveways and portions of the parking facility designated for infrequent overflow parking. on sites where ground recharges, desirable crushed stone may be used for a surface, with approval of the conservation commission.

5. Paved surfaces shall be marked with four-inch painted lines or some other permanent curb or marking system so as to clearly indicate the stall to be occupied by each vehicle.

6. Parking facilities shall be designed to provide proper drainage.

7. Curbing, wheel stops, guard rails, or bollards shall be placed at the edges of surfaced areas, except driveways, in order to protect landscaped areas.

8. Parking facilities shall be kept clean, plowed and free from rubbish, debris, and snow. All plant materials shall be maintained in a healthy condition and whenever necessary shall be replaced with new plant materials to insure continued compliance with any applicable screening requirements. All surfaces, lighting, fences, barriers, and walls shall be maintained in good repair and whenever necessary shall be replaced.

**8.6 <u>Screening and Landscaping</u>**

1. Screening. Outdoor parking facilities containing more than five (5) stalls shall be screened from abutting properties used for residential purposes, as set forth below, except where buffer areas are provided to meet the requirements of Section 6.2.6.

   1) Screening materials shall be located along the perimeter of the parking facility abutting the lot in residential use. Screening shall consist of one or a combination of the following:

      I) A strip of at least five (5) feet in width of densely planted shrubs or trees which are at least three and one-half ft. high at the time of planting and are of a type that may be expected to form a year-round screen.

      II) A wall, barrier, or fence of uniform appearance. Such wall, barrier or fence may be opaque or perforated, provided that not more than fifty (50) percent of the face is open. There shall be a landscaped strip with a minimum width of three (3) feet between the base of the wall, barrier, or fence and any abutting property. The wall, barrier, or fence shall be at least three (3) feet and not more than six (6) feet in height.

      III) A landscaped earthberm at least three (3) feet in height and eighteen (18) feet in width.

2) Every effort shall be made to retain existing trees.

3) The screening as required herein shall be located so as not to conflict with any corner visibility requirements or any other city ordinances. Such screening may be interrupted by entrances or exits.

2. Interior Landscaping Outdoor parking facilities containing twenty (20) stalls or more shall contain interior landscaping in accordance with the following requirements:

1) An area of interior planting equivalent to at least five (5) percent of the area of the parking facility shall be distributed within the parking facility and landscaped and continuously maintained. This requirement shall be in addition to requirements for open space and screening along the perimeter of a parking area.

2) An interior planting area shall consist of at least twenty (20) square feet. At least one tree shall be planted in each such planting area and there shall be at least one tree for every ten (10) parking stalls.

3) Trees required by the provisions of this section shall be at least three (3) inches in caliper at the time of planting and shall be species characterized by rapid growth and by suitability and hardiness for location in a parking lot.

4) Bumper overhang areas shall be landscaped with stone, woodchips, low plantings or other materials that will not be damaged as a result of bumper and oil drippings.

3. Exception to the area and landscaping requirements in Section 8.6.2 may be granted by Special Permit if the City Council finds the amount, placement and type of landscaping proposed will be equal or superior in visual appearance than if the requirements were strictly adhered to.

## 8.7 <u>Off Street Loading Requirements</u>

1. Numbers of Required Off Street Loading Spaces

1) Table of Off Street Loading Requirements

Number of bays required for new or expanded uses by gross floor area of structure

(in thousands of square feet)

| | Under 5 | 5-50 | 51-100 | 101-150 | 151-30" | over 300* |
|---|---|---|---|---|---|---|
| Retail trade, Wholesale and storage, Transportation terminal, Manufacturing, Public utility | 0 | 1 | 2 | 3 | 4 | 1 |

| | | | | | | |
|---|---|---|---|---|---|---|
| Business services<br>Office building,<br>Hotel, Motel, Boarding House,<br>Hospital and related facility,<br>Research laboratory | 0 | 1 | 1 | 2 | 3 | 1 |
| Recreation,<br>Institution | 0 | 0 | 1 | 1 | 2 | 1 |

*for each additional 150,000 square feet

2) Where the computation of required loading bays results in a fractional number, only the fraction of one-half or more shall be counted as one bay.

3) Loading facilities shall not be reduced in total extent or usability after their installation, except when such reduction is in conformance with the requirements of this section.

4) The loading spaces required for the uses listed in the above schedule shall in all cases be on the same lot as the use they are intended to serve. In no case shall the required loading spaces be part of the area used to satisfy the parking requirements of this ordinance.

5) Where retail, or other stores are designed or constructed as a group or as unified building, the aggregate of individual stores shall be treated as one building for the purpose of calculating off-street loading facilities.

6) Where mixed uses occur, off-street loading facilities shall be the sum of the requirements for the several individual uses computed separately, except that such facilities may be reduced by special permit from the City Council.

2. Design of Off Street Loading Spaces

1) Each required loading bay shall not be less than ten (10) feet in width, thirty-five (35) feet in length, and twelve (12) feet in height, exclusive of driveways.

2) Maneuvering space shall be located entirely on the lot with immediate and direct ingress to the building intended to be served. All loading facilities shall be designed



with appropriate means of vehicular access to a street or alley as well as maneuvering area, and no driveways or curb cuts providing access to such loading facilities shall exceed twenty-eight (28) feet in width.

3) No driveway shall be located within twenty-five (25) ft. of a curb line of an intersecting street.

4) Driveways serving a single lot must be at least fifty (50) ft. apart for a corner lot and thirty (30) ft. apart for an interior lot.

5) Loading facilities shall be screened along perimeter abutting residential properties as provided in Section 8.6.1.

6) Off street loading bays may be enclosed in a structure and must be so enclosed if the use involves regular night operation, such as that of a bakery, restaurant, full-service, hotel, bottling plant, or similar uses and if the loading space is located within one-hundred (100) feet of a residential district in the City of Woburn. (amended 7/28/2003)

7) All driveways and loading areas shall be graded, surfaced and suitably maintained to the satisfaction of the city engineer and to the extent necessary to avoid nuisances of dust, erosion, or excessive water flow across public ways.

8) Any lighting shall be arranged and shielded so as to prevent direct glare from the light source onto adjacent streets and properties.

9) Such facilities shall be designed and used in such a manner as at no time to constitute a nuisance or hazard or unreasonable impediment to traffic.

10) All loading spaces shall be located to the rear and sides of the structure; no loading spaces shall be allowed to front along any roadway abutting a structure. (added 12/5/89) .

**********

# SECTION 9

# FLOODWAY AND FLOOD PLAIN DISTRICTS

## 9.1 Purpose

The purposes of the Floodway and Flood Plain Districts are to protect the public safety, health and general welfare, to protect human life and property from the hazards of periodic flooding, to preserve natural flood control characteristics and the flood storage capacity of the flood plain and to preserve and maintain the ground water table and water recharge areas within the flood plain; and to promote the safety and purity of the water, the containment and control of sewerage, and safety of utilities from breaking, leaking, short-circuiting, grounding, igniting, electrocuting or the other dangers due to flooding.

## 9.2 Establishment of Districts

Floodway and Floodplain Districts are established as overlay districts. The Floodway district is shown for Floodway Areas in Zone AE on the Middlesex County Flood Insurance Rate Maps for the City of Woburn, prepared by FEMA for the National Flood Insurance Program, dated June 4, 2010. The Floodplain District is shown for Special Flood Hazard Areas Subject to Inundation by the 1% Annual Chance Flood in Zone AE on the Middlesex County Flood Insurance Rate Maps for the City of Woburn, prepared by FEMA for the National Flood Insurance Program, dated June 4, 2010, or as shown on the Local 100 Year Floodplain Map of Woburn, Massachusetts, prepared by the City of Woburn Engineering Department, dated June 4, 2010 for 100 Year Floodplain Areas. (amended 5/6/2010)

## 9.3 Application

Any proposed use to be located within the limits of the Floodway and Flood Plain District shall be governed by the regulations set forth in this Section as well as all other applicable provisions of this Ordinance.

Where a proposed use is determined to fall within the limits of the Floodway and Flood Plain District, but the applicant presents written certification from the Federal Emergency Management Agency that the site has been exempted and found by that agency to be outside of the limits of the 100-year flood area, the requirements of this Section shall not apply but all other applicable sections of this Ordinance shall apply.

## 9.4 Use Requirements

1. Within the floodway, no encroachments, including but not limited to fill, new construction, substantial improvements and other developments shall be permitted except that a special permit may be granted for the following use:

   1) Bridges and culverts

2. In areas included within a floodplain district, no building or other structure shall be erected, constructed, altered, enlarged or otherwise created for any residence or other purpose; no dumping of trash, rubbish, garbage, or junk or other waste materials shall be permitted; no filling, dumping, excavation, removal or transfer of gravel, sand, loam or other material which will restrict floodwater flow or reduce the floodwater storage capacity shall be permitted, except that a special permit may be granted for the following uses:

   1) Substantial improvements to or erection of any building or structure. For the purposes of this section, substantial improvement shall be taken to mean: any repair, reconstruction, or improvement of a structure, the cost of which equals or exceeds fifty percent of the assessed value of the structure either

      a) before the improvement is started or b) if the structure has been damaged and is being restored after the damage occurred.

   2) Construction, operation and maintenance of dams and other water control devices including temporary alterations of the water level for emergency or maintenance purposes and periodic cleaning, so as not to change the original dimensions.

   3) Bridges and like structures permitting passage between lands of the same owner, except that such bridges and structures shall be constructed, maintained and used at the expense and risk of such owner.

   4) Recreational development, related to boating, fishing, and any non-commercial open air recreation uses and structures ancillary to these uses.

   5) Agricultural uses and ancillary structures for farms, stock farms, truck gardens, nurseries, orchard and tree farms.

3. The portion of any lot within the area designated as located within the flood plain, but not within the 9-2 floodway, district may be used to meet the area and yard requirements as listed in Section 6 of this ordinance for the district or districts in which the remainder of the lot is situated provided that the portion within the flood plain district-does not exceed 20% of the minimum lot area as shown on a certified plot plan

prepared by a Registered Professional Engineer or a Registered Land Surveyor of the Commonwealth.

## 9.5 Procedures

The procedures for special permit applications and hearings of Section 11 shall apply, and in addition, the following shall apply:

1. The application for a special permit shall contain plans certified by a registered land surveyor and/or engineer showing the location of proposed buildings or uses and any existing buildings.

   Plans shall show existing and proposed finished ground contours at two foot intervals. Contours shall be delineated within two hundred feet of the proposed construction of development.

2. In granting a permit the City Council may impose reasonable restrictions based upon or in addition to the consideration listed in Section 9.6, and may set time limitations of the work to be done. The City Council may require that the applicant post a cash deposit or surety bond, in form acceptable to the City Treasurer in amount determined by the City Council to be sufficient to ensure satisfactory completion of the work in compliance with the permit and any specific restrictions and limitations thereof, or to restore any area or unfinished work to its original condition.

3. No occupancy permit shall be issued until the City Council, the Building Commissioner, Building Inspector, and the Board of Health have received and the City Clerk has filed a certified plan showing the foundation and flood elevations, elevations of the completed construction, and until all requirements of all other permits are satisfied. (amended 5/6/2010)

## 9.6 Conditions for Approval of Special Permit Applications

1. Within the flood plain or floodway, no new construction, improvement or other land development shall be permitted unless it is demonstrated by the applicant that the cumulative effect of the proposed development, when combined with all other existing and anticipated development, will not increase the water surface elevation of the one hundred-year flood.

2. For new construction and substantial improvements of existing structures, the following conditions shall apply:

   1) Within zone AE where base flood elevations are provided on the FIRM: exact base elevations should be located by using the flood profiles in the Flood Insurance Study.

Within the areas shown on the Local 100 Year Floodplain Map of Woburn, Massachusetts, prepared by the City of Woburn Engineering Department, dated June 4, 2010 for 100 Year Floodplain Areas, where the base flood elevation is not shown on the Map, the applicant shall obtain any existing base flood elevation data as a basis for the elevation and flood-proofing requirements of this section and shall submit such base flood elevation data to the City Council at the time of making application for a special permit under this section. Under the Wetland Protection Act Regulations, 310 CMR 10.57, applicants may be required to determine base flood elevations by engineering calculations. (amended 5/6/2010)

2) The structure will withstand the effects of flooding. The ground level around and extending 25 ft. outward from any building or structure in a Flood Plain District shall be raised as necessary so that no part of the ground level area so defined, shall be below the elevation shown on the FIRM. Embankments subject to possible scouring by flood waters shall be properly stabilized and protected to prevent erosion by flood waters.

3) The containment of sewerage, safety of gas, electric, fuel, and other utilities from breaking, leaking, short circuiting, grounding, igniting, electrocuting, or any other dangers due to flooding, will be adequately protected.

4) Safe vehicular and pedestrian movement to or over, and from the premises shall be provided on ways having a minimum profile elevation of no less than the base flood elevation.

5) Methods of drainage shall be adequate.

6) Other land in the Flood Plain District shall be protected from impacts resulting from all work of development both approved and not approved on the premises.

7) Where watertight floodproofing of a structure is permitted, a registered professional engineer or architect shall verify that the methods used will be adequate to withstand the flood depths, pressures and velocities, impact and uplift, and other factors associated with the 100-year flood.

8) A registered engineer or architect shall certify that the above minimum conditions are satisfied in the design proposal.

## 9.7 Reference to Existing Regulations

The Floodway and Floodplain Districts are established as overlay districts to all other districts. All development in the districts, including structural and non-structural activities, whether permitted by right or by special permit must be in compliance with Chapter 131, Section 40 of the Massachusetts General Laws and with the following:

1. Appendices Section of the Massachusetts State Building Code seventh edition which addresses floodplain and coastal high hazard areas (currently 780 CMR 120.G, "Flood Resistant Construction and Construction in Coastal Dunes");

2. Wetlands Protection Regulations, Department of Environmental Protection (DEP) (currently 310 CMR 10.00);

3. Inland Wetlands Restriction, DEP (currently 310 CMR 13.00);

4. Minimum Requirements for the Subsurface Disposal of Sanitary Sewage, DEP (currently 310 CMR 15, Title 5);

5. Woburn Wetlands Ordinance (currently Title VII of the Woburn Municipal Code) and regulations promulgated there under.

(added 5/6/2010)

**********

[This page intentionally left blank.]

# SECTION 10

# CLUSTER DEVELOPMENT

## 10.1 Purpose

The purpose of cluster development is to provide for residential development which:

1. Results in the permanent preservation of open space which is of use and value to the City and which would not normally be preserved under development undertaken according to other sections of the ordinance.

2. Encourages creative site planning which is sensitive to the natural characteristics of the land.

3. Provides for economical development, efficient provision of public services and minimizes road and driveway construction and paving.

4. Promotes aesthetics and other amenities.

5. Uses less land per dwelling unit than permitted under normal zoning requirements.

## 10.2 Procedures

1. Any person who submits to the Planning Board, for approval under the Subdivision Control Law, a plan of land in one or more residential districts, may make application to the City Council for a special permit excepting the building lots for dwelling units shown on such plan in said districts from specific dimensional requirements of the zoning ordinance as specified hereunder, but not any other requirements of the zoning ordinance.

2. The applicant shall simultaneously file the application for special permit described above, with the Preliminary Subdivision Plan as described in the Subdivision Rules and in accordance with G.L., Chapter 41, Section 81-S, or, at the applicant's option, the application may be filed with the definitive plan as described in the Subdivision Rules and Regulations.

3. The application for special permit shall be filed as specified in Section 11 of this ordinance. The procedures for special permit granting authority review, review by other boards, hearings and findings in that section will apply.

4. Relating to the subdivision control law, City Council approval of a special permit shall not substitute for compliance with the subdivision control law, nor oblige the Planning

Board to approve any related definitive plan for subdivision, nor reduce any time periods for Board consideration under the law.

**10.3 <u>Content of the Application</u>**

In addition to the requirements for a special permit application contained in Section 11 of this ordinance, the application for a permit for cluster development shall include narrative descriptions as follows, and plans prepared in accordance with the subdivision rules and regulations of the City of Woburn, containing:

1. The size of the tract-in acres.

2. The number of the proposed dwelling units and the net living area of each in square feet.

3. The proposed location and height of all proposed structures.

4. Topographic plan, including a clear and accurate disclosure of the grades of the existing terrain. Large trees, ledge outcrops, natural water courses, and existing buildings together with fences and walls, shall be shown. Approximate proposed grades shall also be shown.

5. The acreage of the proposed permanent open space and location and acreage of any wetlands on the tract as defined by M.G.L., Chapter 131, Section 40.

6. A description of the intended uses of the proposed open space, and an evaluation of its value to the City with respect to natural resource preservation, environmental protection, and accessibility by residents of the City or of the proposed development.

7. A description of the proposed ownership and maintenance of the proposed open space.

8. A description of all dwelling units on properties abutting the tract.

9. A description of the neighborhood in which the tract lies, including utilities and other public facilities, and the impact of the proposed plan upon them.

**10.4 <u>General Requirements</u>**

1. The minimum acreage of a cluster development shall be 5 acres.

1. Except when utilizing the provisions of Section 10.4.3 below, the number of dwelling units in the cluster development shall be equal to the number of building lots which the Planning Board finds, in its review of the proposed subdivision of the tract under its

Subdivision Rules and Regulations, would be permitted by normal zoning requirements in the district. Wetlands, water bodies, and land prohibited from development by reason of legally enforceable restrictions, easements or convenants shall be excluded from the calculation of permissible building lots.

3. The applicant may apply for inclusion of additional units in the cluster development, not to exceed an increase of fifteen (15) percent over the number of units established under Section 10.4.2, when an amenity such as the following is offered to the community: public access to open land for passive recreation; granting of land to City of Woburn for conservation purposes; public availability of recreational and/or daycare facilities; a matching of extra market rate units with an equal number of units to be available at construction cost to the City of Woburn Housing Authority; variation of cost or size of dwelling to permit purchase by broader market; planning to include units especially suited to elders, etc.

   Approval for the additional units shall be based upon the conditions set forth in Section 10.6.8.

4. In parcels located partly in more than one district, no more than the total number of lots which would be permitted by normal zoning requirements in the combined districts and complying with Subdivision Rules and Regulations shall be permitted.

5. The frontage of each lot on a street within the cluster development shall not be less than 30 feet.

6. Any lot with frontage on a street not within the cluster development shall meet the frontage requirement of the district in which the lot is located.

7. No dwelling shall exceed two and one half stories nor be greater than thirty-five feet in height.

8. No dwelling shall be located less than twenty-five feet from a boundary of the cluster development.

9. Each unit shall have separate entries and off street parking or garage.

10. Minimum lot size shall be 10,000 (ten thousand) square feet. (added 06/21/88) .

**10.5 <u>Requirements for Open Space</u>**

1. All land shown on a plan for which a special permit is granted under this section which is not included in building lots, streets or easements shall be established by conservation restriction or conservation easement as open space for conservation

and/or recreation purposes, or by conveyance to the City of Woburn for conservation purposes.

2. The total area of the open space parcel(s) shall comprise at least 30% of the total area of the tract.

3. At least eighty (80%) percent of the open space shall be preserved by easement or restriction for conservation purposes only.

4. Construction and use of vegetable gardens or floral gardens on not more than twenty percent (20%) of the total open space land shall be permitted.

5. Each dwelling in the tract shall have direct access to one or more portions of the open space, unless the Special Permit Granting Authority finds that, due to topography or other conditions, this requirement can be modified, and further finds that the lack of direct access will be offset by other mitigating-factors.

6. All land areas used to meet the open space requirement shall be so configured as to accommodate within a circle having a diameter of not less than seventy-five (75) feet.

7. The open space land area required shall be contained in no more than two (2) non-contiguous parcels or, if more than two (2) parcels are to be utilized for this requirement, no parcel shall contain less than fifteen thousand square feet (15,000 sq. ft.)

8. The open land, and such other facilities as may be held in common shall be conveyed, as determined by the Special Permit Granting Authority, subject to the following guidelines:

   In general, valuable natural resource land such as wetlands not suitable for any public use, or suitable for extensive public recreational use, should be conveyed to the City or to a trust; whereas land which will be principally used by the residents of the cluster should be conveyed to a homes association. Conveyance shall be to one of the following:

   1. To a corporation or trust comprising a home owner's association whose membership includes the owners of all lots or units contained in the tract. The developer shall include in the deed to owners of individual lots beneficial rights in said open land, and shall grant a conservation restriction to the City of Woburn over such land pursuant to M.G.L. Chapter 184, s. 31-33, to insure that such land be kept in an open or natural state and not be built upon for residential use or developed for accessory uses such as parking or roadways. This restriction shall be enforceable by the City through its Conservation Commission in any proceeding authorized by s.33 of Ch. 184 of M.G.L. In addition, the be responsible for the maintenance of the

common land and any other facilities to be held in common until such time as the homes association is capable of assuming said responsibility. In order to ensure that the association will properly maintain the land deeded to it under this section, the developer shall cause to be recorded at the Middlesex County Registry of Deeds, a Declaration of Covenants and Restrictions which shall, at a minimum, provide for the following:

I) Mandatory membership in an established homes association, as a requirement of ownership of any lot in the tract;

II) Provisions for maintenance assessments of all lots in order to ensure that the open land is maintained in a condition suitable for the uses approved by the homes,association. Failure to pay such assessment shall create a lien on the property assessed, enforceable by either the homes association or the owner of any lot;

III) Provision which, so far as possible under the existing law, will ensure that the restrictions placed on the use of the open land will not terminate by operation of law.

2. The conservation restriction or easement shall be granted to a nonprofit organization, the principal purpose of which is the conservation of open space, and to the Conservation Commission for park or open space use, with a trust clause insuring that it be maintained as open space. Both the non-profit organization and the Conservation Commission shall, under the terms of the restriction or easement, have concurrent powers of enforcement.

9. Some interim protection of open land must be provided by recorded covenant of the landowner, where a large cluster will be developed in phases.

10. The covenant must be submitted to the Special Permit Granting Authority for review and approval prior to recording.

**10.6 <u>Conditions</u>**

No special permit for a cluster development shall be issued unless the requirements enumerated in this section, and other sections of this ordinance, are met, and the special permit granting authority finds:

1. Preservation of the open space will be beneficial to the City and/or the residents of the tract, by virtue of the creation of usable open space for passive recreation, preservation of scenic areas or views, preservation of natural resources, contribution to a network of open space as part of an overall City Conservation Plan, or other.

2. The cluster development will result in a development superior to the proposed conventional subdivision of the tract, from the standpoint of location of units, topography of the site, efficient provision of public services, and reduction in the amount of roadway and driveway construction.

3. The cluster development will have no more adverse impact on nearby developed neighborhoods, by virtue of increased traffic, impairment of privacy and views, than would conventional subdivision of the tract.

4. The cluster development will have no adverse impact on the quality or supply of groundwater.

5. Proper arrangements have been made for access to the open space by residents of the tract, emergency vehicles of the City, and, if the open space is to be held by the City, by the public.

6. The conservation easement or conservation restriction shall be acceptable as to both content and form. At the minimum, the instrument must comply with the provision of M.G.L. Ch. 184, Sect. 31-33, or Internal Revenue Code Section 170 (h) as may be amended.

7. Suitable arrangements for management and maintenance of the open space have been made.

8. Where application has been made for the inclusion of additional units in exchange for provision of an amenity as provided in Section 10.4.3, the amenity to be provided is sufficiently beneficial to the City of Woburn, and the additional units are appropriate to the neighborhood.

**********

# SECTION 11

# SPECIAL PERMITS AND VARIANCES

## 11.1 Purpose:

The purpose of this section is to set forth the procedures and conditions which shall apply to all applications for special permits and variances. Requirements and conditions in addition to those specified in this section shall apply when so specified in other sections of this ordinance. Uses for which site plan review is required shall be subject to the requirements of this section and of Section 12. Special permits are covered in Sections 11.3 through 11.6 below. Variances are covered in Sections 11.7 through 11.9.

## 11.2 Authority

The City Council shall be the special permit granting authority (SPGA) for all proposed projects with uses requiring a Special Permit under Section 5 which are designated with a “P”. The Planning Board shall be the special permit granting authority (SPGA) for all proposed projects with uses requiring a Special Permit under Section 5 which are designated with a “PB”, and for all projects which require Site Plan Approval under Section 12.2 of this ordinance.

The Board of Appeals shall have the authority to grant variances. That applications to the Board of Appeals for special permits pursuant to Section 7 herein shall not require review by the Planning Board, Conservation Commission or City Engineer but one copy of the application and accompanying materials shall be filed with those departments under Section 11 but in all other respects shall follow the requirements for notice and hearing in Section 11

(amended 10/04/1999; amended 6/13/2005)

## 11.3 Procedures for Special Permits

1. The applicant shall submit a written application for a special permit with 12 copies to the City Clerk. The application shall also be subject to Rules and Regulations adopted by the City Council pursuant to G.L. Chapter 40A, Section 9, and incorporated herein. No application shall be accepted or considered complete that does not have any necessary variances required from the Board of Appeals. All appeal periods associated with granted variances must be expired before an application is submitted. If there is a

dispute between the building commissioner and the petitioners on whether a variance is necessary this dispute must be presented to the Board of Appeals for resolution. No application with such disputed variances shall be considered complete and shall not be accepted until the Board of Appeals makes a decision. (amended 10/21/1997, 5/15/2001, 6/19/2014).

2. The City Clerk, within three (3) business days of receipt of the application, shall distribute nine (9) copies of the application and all other required special permit submission materials to the City Council, 2 copies to the Planning Board-Director and one (1) copy to the City Engineer for review and comment. (amended 10/21/1997, 6/19/2014).

3. Boards and departments may transmit comments and recommendations to the City Council within 30 days of receipt of the application. Failure to comment will be deemed a lack of objection.

4. The City Council may provide for a schedule of fees in connection with the special permit procedure in accordance with state law.

5. The City Council shall, within sixty-five (65) days of the filing of the application, hold a public hearing, notice of which shall be published in a local newspaper once in each of two successive weeks with the first publication to be not less than fourteen (14) days before the date of the hearing and shall be mailed to all "parties of interest" as defined in the General Laws, Chapter 40A, Section 11, and to any other property owners deemed by the City Council to be affected thereby.

   "Notice shall be given by mail, postage prepaid by the City Clerk". The list of persons to be notified shall be prepared by the applicant, certified by the Office of Assessors.

6. The City Council shall, within ninety (90) days following the public hearings, but not until it has received comments from the Planning Board, Conservation Commission, and City Engineer, or until 30 days have elapsed without such reports being submitted, issue its findings in writing as to the conditions specified in Section 11.5 below and in other sections of this ordinance, and shall certify in writing that the application is approved as submitted, approved subject to modification, or denied.

7. If the City Council fails to issue its findings within ninety (90) days, the application shall be deemed approved. The special permit shall not become effective until the City Council has been notified by the applicant of the book and page number as recorded in the Registry of Deeds.

8. Approval of the special permit shall require a two-thirds (2/3) vote of the City Council.

9. If the application is denied, the applicant shall not submit substantially the same proposal for two (2) years except as provided under G.L., Chapter 40A.

10. Special permits granted under this section shall lapse within two (2) years, excluding time required to pursue or await the determination of an appeal, from the grant thereof, if a substantial use has not sooner commenced or if construction has not been begun. The City Council may grant an extension of good cause and shall grant an extension if the delay has been caused by the need to seek other permits.

11. Construction or operations under a special permit shall conform to any subsequent amendment to this ordinance unless the use or construction is commenced within a period of not more than twelve (12) months after the issuance of the permit and in cases involving construction, unless such construction is continued through to completion as continuously and expeditiously as is reasonable. (amended 2/8/2018)

12. The City Council, by a two-thirds (2/3) vote, shall have the power to modify, amend or rescind its approval of a Special Permit, or to require a change in the approved Special Permit as a condition of its retaining the status of an approved Special Permit. All of the provisions of the issuance of a Special Permit, relating to its submission and approval, shall, so far as apt, be applicable to the approval of the modification, amendment or rescission of such approval of a Special Permit which has been changed under this section. (added 12/1/1992).

**11.4 <u>Contents of the Application for Special Permits</u>**

Any application for special permit shall include the following items, as well as a completed Form "A" - Submission Checklist for applications Requiring a Special Permit. A copy of said Form "A" is included in Section 15 - Illustration Addendum of this ordinance (amended 10/21/1997):

1. Name and address of the applicant.

2. Statement certifying ownership or prospective ownership of the premises involved, or evidence that the applicant has permission of the owner to make such application.

3. Legal description of, and street address, if there is one, or otherwise description of the location of the premises involved.

4. Plans of the proposed project, drawn to scale and dimensionally correct. Plans to be submitted are all those applicable to the establishment of the conditions specified in Section 11.5 below and in other sections of this bylaw where specific conditions are established. Such plans may include, if applicable, building plans, plot plans, traffic circulation plans, topographical plans, and studies such as traffic generation and parking utilization.

5. Evidence as required to show the effects of the proposed project upon traffic, road capacity and city utilities.

6. Evidence as to the status of all permit applications to other City, State or Federal agencies concerning the project, including agencies such as the Board of Appeals, the Conservation Commission, and the Mass Division of Environmental Quality Engineering.

7. A table on plans displaying all associated use and dimensional regulations and corresponding proposal specifications. All additional information as required elsewhere in this ordinance.

8. Any plans submitted, deemed as a commercial facility as defined under Title III of the Americans with Disabilities Act (ADA), public accommodation as defined under Title III of the Americans with Disabilities Act (ADA), private club not under Title II of the Civil Rights Act of 1964, or public entity, as defined under Title III of the Americans with Disabilities Act (ADA), with the application shall contain a statement signed by the architect of record as follows: 'These Plans as submitted: 1. _____ Conform to the MAAB Laws and Regulations, 2. _____ Conform to the ADA Law and regulations, 3. _____ Do not conform at this time, 4. Waivers will be filed for the following issue(s) _____. Certified' with the architect's name and stamp affixed thereto. (added 4/25/2005)

**11.5 <u>Conditions for Special Permits</u>**

The City Council shall not issue a special permit unless it finds that the use which is the subject of the application will meet the conditions specified below, and in addition any and all conditions specified for the permit elsewhere in this ordinance.

1. Satisfactory provision and arrangements of ingress and egress to property and proposed structures thereon with particular reference to automotive and pedestrian safety and convenience, traffic flow and control and access in case of fire or catastrophe. If traffic due to the proposed use is projected to exceed the capacity of existing roadways, a service road or divided entrance drive may be required by the City Council.

2. Adequacy of the capacity of water, sewerage and drainage facilities to service the proposed use.

3. Adequate off-street parking and loading areas where required with particular attention to the items in Section 11.5.1 and the noise, glare, or odor effects of the proposed use on adjoining properties and properties generally in the district.

4. Satisfactory provision of refuse collection, disposal and service areas, with particular reference to impacts on adjacent uses.

5. Exterior lighting with reference to glare, traffic safety, and compatibility and harmony with properties in the district.

6. Yards and other open space and landscaping are provided as required and reasonable steps have been taken to insure the privacy of adjacent existing uses.

7. The proposed use is in general compatibility in scale and character with adjacent properties and other property in the district.

8. The proposed use or structure will not be adverse to the general purposes of this ordinance.

9. The Council shall also impose such additional conditions of those specified in this Ordinance as it finds reasonably appropriate to safeguard the neighborhood or otherwise serve the purposes of this Ordinance, including but not limited to the following: Front, side or rear yards greater than the minimum required by this ordinance, screening, buffers, or planting strip, fences, or walls, as specified by the Council modification of the exterior appearance of the structure; limitation upon the size, number of occupants, method and time of operation, or extent of facilities; regulation of number and location of drives, accessways, or other traffic features, and off-street parking or loading, or other special features beyond the minimum required in the ordinance.

10. All application requirements for review and approval of a Special Permit, cited in Section 11, shall apply to any expansion or extension of a use granted a Special Permit under the provisions of said Section, i.e., drive-up customer service facility. (added 2/16/1993; amended 7/28/2003).

## 11.6 Additional Conditions for Special Permits for Specific Uses and Conditions

In addition to the conditions in the foregoing section, the following conditions shall apply to special permits for the specific uses and conditions listed below.

1. Customary home occupation or office, comprising not more than 25 percent of the floor area of the dwelling unit. (Section 5.1.54).

   Off street parking for employees and clients in an amount and manner to be deemed sufficient by the City Council is provided and is screened from adjacent properties in a way that light, glare and adverse visual impacts from parked cars and associated lighting are not greater than would occur with exclusive single family use of the site.

2. Wholesale establishments, warehouses and distribution centers (Section 5.1.42) and Truck Terminals, truck freight yards, and freight terminals (Section 5.1.50 and 49).

   Trucking associated with the facility does not use any street in a residential district.

   All structures and parked trucks are located not less than three hundred (300) feet from any existing residential lot line.

3. Exception to Screening Requirements in Buffer Zones (6.2.6.(6)).

   The alternative screening device will screen the use from adjacent residential areas at least as effectively as would the devices required in Section (6.2.6.(6)).

4. Reconstruction of a non-conforming use or structure damages by fire or other natural cause (7.6.2).

   The reconstructed structure or use will not be more detrimental to the neighborhood than the use or structure which it replaces. The City Council shall consider, without limitation, impacts upon the following: traffic volumes, traffic congestion, adequacy of municipal water supply and sewerage capacity, noise, odor, scale, character, and visual effects.

5. Reduction in Required Off-Street Parking Stalls for Mixed Uses (8.2.5)

   The hours of parking needs for individual uses comprising the mixed use development will sufficiently differ so that a lower number of parking spaces than normally required will serve the operating needs of the development.

6. Parking Facilities on a Lot Separate from the Use to be Served

   The parking facilities are located within five hundred (500) feet of the use to be served. (5.1.72 and 8.3.2)

   Suitable arrangements, such as common ownership, long term lease or easement, have been made to assure the permanent provision of the parking facility.

7. Exceptions to Landscaping Requirements for Parking Facilities Containing Twenty (20) or More Stalls (Section 8.6.2)

   The area, location and type of landscaping proposed will be at least as satisfactory in suitability to the soil or topography of the sire, visual appearance, and maintenance requirements as the landscaping required in Section 8.6.2.

8. Reduction in Required Loading Spaces for Mixed Uses (Section 8.7.1)

   The hours of parking needs for individual uses comprising the mixed use development will be sufficiently different so that a lower number of parking spaces than normally required will adequately serve the operating needs of the development.

9. Cluster Development

   Standards as set forth in Section 10.

10. Drive-up Customer Service Facility

    A drive-up customer service facility shall be permitted, subject to the granting of a special permit, only when accessory to a use permitted by right or special permit in the underlying zoning district. All signs related to Drive-up customer service facilities shall be permitted by Special Permit by the City Council in accordance with the Development Standards of this Section.

a. Findings. A special permit shall not be granted for a drive-up customer service facility unless the City Council, in addition to the findings required by Section 11 of the Woburn Zoning Ordinance, makes the following additional findings:

1. The design and location of the facility will not contribute to increased congestion on public or private streets or alleys adjacent to the subject property.
2. The design and location of the facility will not impede access to or exit from the parking lot serving the business, impair normal circulation within the parking lot or impede pedestrian movement.
3. The design and location of the facility will not create a nuisance for adjacent properties.

b. Development Standards:

1. Drive-up customer service facilities shall provide a minimum of eight (8) stacking spaces (within the site) before the order board or transaction window for restaurant, fast food and shall provide a minimum of five (5) stacking spaces (within the site) for all other uses. In addition, the facility shall provide another four (4) stacking spaces between an order board and the transaction window. If the facility has two transaction windows the required stacking spaces may be evenly spilt between each of the windows, however if a facility has five(5) stacking spaces no transaction window shall have less than two (2) stacking spaces. The area of stacking spaces and driving lane provided for vehicles waiting for drive-up customer service, that is physically separated from other traffic and pedestrian circulation on the site shall be called a stacking lane.
2. Stacking spaces shall be a minimum of ten (10) feet in width along straight portions, and twelve (12) feet in width along curved segments and twenty (20) feet in length.
3. Stacking lanes shall be designed to prevent circulation congestion, both on site and on adjacent public streets. The circulation shall: (a) separate drive –through traffic from site circulation, (b) not impede or impair access into or out of parking spaces, (c) not impede or impair vehicle or pedestrian traffic movement, and (d) minimize conflicts between pedestrian and vehicular traffic by physical and visual separation between pedestrian ways and stacking lanes and driveways, or at the crossing of the two. Stacking lanes shall not interfere with required loading and trash storage areas and loading or trash operations shall not impede or impair vehicle movement within stacking lanes.
4. All stacking lanes shall be separate from other vehicular and pedestrian circulation aisles and parking spaces.

5. Any drive-up customer service facility speaker and/or sound system shall not be audible above daytime ambient noise levels beyond the property boundaries.
6. All menu boards or canopy signs related to Drive-up customer service facilities shall be reviewed by the Special Permit Granting Authority with regard to the aesthetic appearance of the sign, its relation with the overall signage on the lot including number and type of signs, and its overall impact on the surrounding area. Menu Boards and Canopy signs shall comply with Sections 13.3, 13.4.2 through 13.4.9, 13.5 of the Woburn Zoning Ordinance. All other signs at drive-up customer facilities shall comply with the requirements of Section 13 of the Woburn Zoning Ordinance.

   Drive-up customer service facilities shall be limited to no more than two menu boards per facility and shall be located adjacent to the driveway leading to a drive through window. The menu board shall be located in such a way that the operator of a motor vehicle can read the sign from the vehicle. Menu boards shall not exceed eight feet in height and nine feet in width and may be free standing or attached to the building. Menu boards shall be at least five feet from the property line and shall not exceed 50 square feet in sign area. The area of the menu boards shall not be counted towards the maximum allowable signage.

   Drive-up customer service facilities shall be limited to no more than one canopy sign at the location of drive-up customer service facilities. The canopy sign shall be located in such a way that the operator of a motor vehicle can read the sign from the vehicle. Signs shall be at least five feet from the property line and shall not exceed 50 square feet in sign area. The area of the canopy sign shall not be counted towards the maximum allowable signage.

(Added 7/28/2003; amended 8/22/2006)

11. Dwelling Units Above First Story in Commercial Structures in the B-D District.

1. A parking plan shall be approved by the City Council to ensure that adequate on-site and off-site parking, including parking in a municipal parking lot within 500 feet of the locus, is available to serve the unit and which would not create an undue burden on municipal parking facilities.
2. That if at the time of application the locus has open space there shall be no reduction in excess of ten percent (10%) of the open space.

(Added 2/8/2007)

12. Rooftop Dining in the B-D District.

    1. The rooftop dining area shall be associated with a Full-Service Restaurant establishment doing business within the same building.

    2. The floor immediately below the rooftop area must either be occupied by a non-residential use or a provision inserted into the deeds or lease/rental agreements for each dwelling unit disclosing the existence of and general details about the rooftop dining operation and conditions associated with it (i.e. authorized business hours, occupancy limit, noise, customary activity levels, etc.).

    3. The preferred main access to the rooftop shall be from the interior space of the Full-Service Restaurant establishment doing business within the same building, provided an exterior access may be permitted upon demonstration of a de minimus impact on surrounding properties.

    4. The rooftop dining use shall comply with the minimum twenty-foot (20') buffer requirement set forth in Section 5.7.1.

    5. Use of the rooftop shall not occur unless the Full-Service Restaurant establishment doing business in the same building is also open;

    6. Use of the rooftop shall not exceed the hours of operation for the Full-Service Restaurant establishment doing business within the same building but in no event shall the rooftop be open and/or occupied later than 10:30 p.m.

    7. Equipment and structures associated with an elevator providing access to the rooftop area, restroom facilities required by State Building Code, and any service areas, preparation stations or similar facilities associated with the rooftop dining use shall:
        a. Not to exceed ten feet (10') in height. Equipment and structures associated with an elevator providing access to the rooftop area may be authorized by the Special Permit Granting Authority to exceed the height limitation in order to provide access to the rooftop dining to the extent reasonably necessary. The elevator and all equipment associated with the elevator shall be required to be enclosed (contained within the interior of the building as opposed to being located outside the elevator shaft/enclosure). The height shall not exceed what is reasonably required to comply with the Building Code requirements and reasonably required to install the elevator as determined by the Building Commissioner. (amended 6/7/2018)

b. Not be included in the calculation of the Height of a Building or subject to the setback requirements of section 12 below;
c. Not occupy more than fifteen percent (15%) of the gross area of the roof, except that for buildings that existed at the time of adoption of this Ordinance, the City Council may allow a greater percentage of roof coverage if it can be demonstrated that existing roof features require or justify such an increase. If the applicant can demonstrate that there is a pre-existing structure that applicant must design around and therefore requires applicant to exceed this limitation to provide adequate service and sanitary area, then the City Council may increase this percentage limitation;
d. To the extent practical be located in a manner that minimizes or prevents their visibility from street level; and
e. Be properly locked and secured at the end of each business day.

8. Live entertainment, music, speakers, televisions, or public address systems shall not be permitted on the rooftop unless the City Council so authorizes. The windows and doors to areas where such noise originates shall be closed (except when being used as permitted means of egress) or such areas must be sound-proofed so as to prevent sound from being heard at the street level of the building.

9. Service areas, preparation stations and similar facilities shall be ancillary in nature as determined by the City Council and shall service the rooftop dining area only.

10. No food shall be stored on the rooftop except during the hours the rooftop dining area is in use. No alcohol shall be stored on the rooftop unless it is properly locked and secured at the end of each business day.

11. All lighting associated with the rooftop dining area shall be designed to effectively eliminate glare, shall not be directed toward property lines and shall be turned off when the area is not in use.

12. Walls or railings to prevent patron encroachment within the set backs as provided herein shall comply with applicable Massachusetts Building Code requirements and shall be set far enough back from the edge of the building to provide safe conditions for both restaurant employees, patrons and the public, in the opinion of the City Council. These walls or railings shall, in concert with other structures and/or landscaping, provide a setback to prevent patron access from the edge of the building. At a minimum, the set back from the edge at the front of the building shall be ten (10) feet and the setback from the edge at the side

and rear (if not abutting the wall of another building), shall be four (4) feet. The side and rear setback from the edge of the building does not apply to the Service and sanitary structures, if any.

13. Rooftop dining areas shall be kept free of trash, debris and food waste. All trash, debris, and food waste shall be properly stored while the rooftop dining area is in use and all trash, debris and food waste shall be removed from the rooftop entirely at the close of each business day.

14. Special Permits for rooftop dining shall be issued only to the applicant and shall not be transferrable without prior approval from the Woburn City Council.

15. The following restrictions shall apply:
    a) Propane heaters, landscaping, ornamental trees or other permanent decorative items shall be shown on the plan of record.
    b) Hot tubs shall not be allowed.
    c) Decorations of any kind shall not extend farther than 8 feet above the rooftop.
    d) Banners or signage shall not be allowed on or hanging over the rooftop.
    e) Neon signs or signs advertising adult beverages shall not be allowed.

(added 2/8/2018)

13. Townhouses or Garden Apartment: Detached dwellings in a cluster development (5.1.3a); Townhouse or Garden Apartment: Congregate Elderly Housing (5.1.3b); Townhouse or Garden Apartment: Townhouse Development (5.1.3c); Townhouse or Garden Apartment: Garden Apartment (5.1.3d); and Elevator Apartment (5.1.4).

    All streets, ways or access roads within the interior of any development that are shown on an approved Plan of Record and which provide access to dwelling units, shall be named after a man or woman killed in action in Revolutionary War, Civil War, World War I, World War II, the Korean War, the Vietnam War or any other armed conflict involving the United States military forces and said person shall have a connection to Woburn. A list of those who were killed in action in war shall be assembled by the Veteran's Agent and filed with the City Clerk.

(added 7/19/2018)

**11.7 Procedures for Variances**

An application for variance shall be made to the Board of Appeals. After a public hearing noticed and held according to Ch. 40A, Section 11, the Board of Appeals shall issue a decision. Provisions regarding notification of applicant, date of effectiveness, extension and conditions contained in Ch. 40A, Sections 10 and 11 shall apply. Any plans submitted, deemed as a commercial facility as defined under Title III of the Americans with Disabilities Act (ADA), public accommodation as defined under Title III of the Americans with Disabilities Act (ADA), private club not under Title II of the Civil Rights Act of 1964, or public entity, as defined under Title III of the Americans with Disabilities Act (ADA), with the application shall contain a statement signed by the architect of record as follows: 'These Plans as submitted: 1. _____ Conform to the MAAB Laws and Regulations, 2. _____ Conform to the ADA Law and regulations, 3. _____ Do not conform at this time, 4. Waivers will be filed for the following issue(s) _____. Certified' with the architect's name and stamp affixed thereto. (amended 4/25/2005)

**11.8 Standards for Variances**

In granting any variance, the Board of Appeals shall apply the standards for granting of variances as set forth in Ch. 40A, Section 10. In particular, the Board of Appeals may grant a variance where it specifically finds that owing to circumstances relating to the soil conditions, shape or topography of such land or structures and especially affecting such land or structures but not affecting generally the zoning district in which it is located, a literal enforcement of the provisions of the ordinance or bylaw would involve substantial hardship, financial or otherwise, to the petitioner or appellant, and that desirable relief may be granted without substantial detriment to the public good and without nullifying or substantially derogating from the intent and purpose of this ordinance.

**11.9** No use variance shall be granted.

**11.10 List of Variances**

The Chairperson of the Woburn Board of Appeals or his/her designee shall forward a summary of each decision to the Woburn City Council, the Woburn Daily Times Chronicle and the Woburn Advocate of all variances that the Board allows or denies within seven (7) business days after filing the decision with the City Clerk. Notification shall consist of a list of variances granted or denied and copies of each signed decision. (added 6/19/2002)

## 11.11 Affordable Housing Requirement

1. Whenever an application under this section for a Special Permit from the City Council seeks approval for the development of more than two units of Townhouse, Garden, or Elevator apartments as specified under Sections 5.1.3(a) through 3(d), and Section 5.1.4 or wherever an application under this section for a Special Permit from the City Council seeks approval for the development of more than ten (10) units of Townhouse, Garden, or Elevator apartments as specified under Section 5.1.5; or any application for a Special Permit to create more than two units of Townhouse, Garden, or Elevator apartments under Section 5.1.69, Section 5.1.70, or Section 7.3, under the zoning classification for the subject parcel existing at the time of application, a condition of any such special permit, the application for which was filed after January 1, 2018 at least fifteen percent (15%) of the units on site and within the development are to be occupied by Income Eligible Households as defined in 760 CMR 56.02, as may be amended from time to time. The affordable housing units to be provided shall remain affordable in perpetuity, be equivalent in size, quality, and characteristics to the other units within the development, including tenure type, i.e., whether the overall development is intended for rental or homeownership. No certificate of occupancy for any market rate unit in the development shall be issued until certificates of occupancy have been issued for all affordable housing units. The monitoring of the affordability shall be the responsibility of the applicant and shall be supervised by the Woburn Housing Authority (WHA) in accordance with a Memorandum of Understanding (MOU) between the applicant and the WHA said MOU shall be presented to the City Council prior to final approval of the Special Permit by the City Council.

2. The Applicant shall be responsible for preparing a Massachusetts Local Initiative Program, Units Only Application, administered by the Massachusetts Department of Housing and Community Development (DHCD) or, any successor program, or an application for any other program that provides for units that are deemed eligible by DHCD to be included under MGL Chapter 40B Section 20, under the direction of the Mayor or his designee, for execution and submission by the City of Woburn, and to complete all other work and fulfill all other requirements related thereto, to ensure that the units will be considered subsidized low and moderate income units as defined by MGL Ch.40B, Section 20.

3. An Affordable Housing Fund shall be established in the City Treasury to receive all payments made under this Section, and shall be kept separate and apart from other monies by the City Treasurer. Any moneys in said fund shall be expended in accordance with the City Charter, to support the creation of low and moderate income housing units which meet the definition

of “low or moderate income housing” as defined by MGL Chapter 40B, Section 20. All moneys which are collected as a result of any contribution to this fund shall be transferred to the principal of said fund, and the City Treasurer shall be the custodian of the fund and shall deposit the proceeds in a bank or invest the same in such securities as are legal for the investment of funds of savings banks under the laws of the Commonwealth of Massachusetts, or in federal savings and loan associates situated in the Commonwealth. Any interest earned thereon shall be credited to and become a part of such fund. The cost of acquiring land or property for future affordable housing development by the City of Woburn or one of its public authorities is an allowed expenditure of funds held in the Affordable Housing Fund.

4. In determining the number of units to be provided pursuant to Section 11.11.1, for all projects where there are a total of 10 or more units, fractional numbers less than .5 shall be rounded down to the nearest whole number and fractional units of .5 or greater shall be rounded up to the nearest whole number. For those projects where there are a total of units less than 10, in determining the number of units to be provided pursuant to Section 11.11.1, fractional numbers shall be rounded down to the nearest whole number. (Added 6/26/2007; para. 1 amended 11/24/2008; amended 2/17/2016; amended 1/18/2018)

[This page intentionally left blank.]

# SECTION 12

# SITE PLAN REVIEW

## 12.1 Purpose

The purpose of this section is to provide a comprehensive review procedure for construction projects, herein defined, to insure compliance with the goals and objectives of the provisions of this zoning ordinance, to minimize deleterious impacts of such development, and to promote development which is harmonious with surrounding areas.

## 12.2 Requirements

Site Plan Review shall be required for the following types of projects:

1. Restaurant, Fast Food; (amended 7/28/2003)
2. Garden apartments, townhouses; and elevator apartments;
3. Office buildings designed to accommodate primarily medical offices;
4. Any construction project which involves the construction of fifteen thousand (15,000) or more square feet gross floor area, or an increase in gross floor area of 5,000 square feet or more, or any increase in gross floor area individually or collectively, which would cause a building with gross floor area of less than fifteen thousand (15,000) square feet to exceed fifteen thousand (15,000) square feet of gross floor area, or results in the creation of 100 or more parking spaces.

## 12.3 Authority

1. In cases where Site Plan Review is required by this section but no Special Permit is required under Section 5 of this ordinance, Site Plan Review shall constitute a Special Permit for which the Planning Board shall be the Special Permit granting authority.

2. In cases where both Site Plan Approval under this section, and a Special Permit under Section 5 is required, Site Plan approval shall constitute review by the Planning Board of the application for Special Permit, as specified in Section 11.3.2., and the City Council shall be the special permit granting authority.

## 12.4 Procedures

1. Procedures for Projects which require Site Plan Review under this section, but no Special Permit under Section 5.

   1.) The applicant shall submit a written application for Site Plan Review, accompanied by a site plan, required submission items, per subsection 12.5 - Content of the Application for Site Plan Review - as well as a completed Form "B" - Submission Checklist for Site Plan Applications Requiring Special Permits. A copy of said Form "B" is included in Section 15 - Illustration Addendum - of this Ordinance. Note: Nineteen (19) copies of all required site plan materials shall be submitted with the City Clerk at the time of submission of the application (amended 5/17/1988, amended 10/21/1997)(Note reference to Section 15 as passed, however Illustration Addendum is Section 16).

   2.) The City Clerk, within three business says of receipt of the application, shall distribute 9 copies of the application to the City Council, 1 copy each to the Conservation Commission, and City Engineer for review and comment, and 7 copies to the Planning Board. (amended 5/17/1988).

   3.) Boards and departments shall transmit comments and recommendations to the Planning Board within 45 days of receipt of the application. Failure to comment will be deemed a lack of objection. (amended 5/17/1988).

   4.) The Planning Board may provide for a schedule of fees in connection with the review procedure in accordance with State law.

   5.) The Planning Board shall, within sixty-five (65) days of the filing of the application, hold a public hearing, notice of which shall be published in a local newspaper once in each of two successive weeks with the first publication to be not less than fourteen (14) days before the date of the hearing and shall be mailed to all "parties of interest" as defined in G.L. Chapter 40A, Section 11, and to any other property owners deemed by the Planning Board to be affected thereby.

   6.) The Planning Board shall, within ninety (90) days following the public hearings, but not until it has received comments from the City Council, Conservation Commission, and City Engineer, or until 45 days have elapsed without such reports being submitted, issue its findings in writing as to the conditions specified in Section 12.6 below and in other sections of this ordinance, and shall certify in writing that the application is approved as submitted, approved subject to modification or conditions, or denied.(amended 5/17/1988).

7.) The Planning Board may issue its approval subject to the condition that the developer provide safeguards, limitations and/or improvements which may include, without limitation, the following: improvements in existing water and sewerage facilities; improvements in existing intersections or streets. including storm drainage, reconstruction of ways and/or streets, traffic controls and pedestrian walkways.

8.) The Planning Board may issue its approval subject to the condition that certain permits, such as those required from the Mass. Department of Environmental Engineering, be obtained.

9.) If the Planning Board fails to issue its findings within ninety (90) days, the application shall be deemed approved.

10.) Approval of the Site Plan shall require a two-thirds vote of the Planning Board.

11.) If the application is denied, the applicant shall not submit substantially the same proposal for two (2) years, except as provided under G.L. Chapter 40A.

12.) Approvals granted under this section shall lapse within two (2) years, excluding time required to pursue or await the determination of an appeal, from the grant thereof, if a substantial use has not sooner commenced or if construction has not been begun. The Planning Board may grant an extension for good cause and shall grant an extension if the delay has been caused by the need to seek other permits.

13.) Construction or operations under Site Plan Review shall conform to any subsequent amendment to this ordinance unless the use or construction is commenced within a period of not more than six months after the issuance of the permit and in cases involving construction, unless such construction is continued through to completion as continuously and expeditiously as is reasonable.

14.) In cases where the Planning Board is the Special Permit granting authority under Section 12 of this ordinance, the Board, by a two-thirds (2/3) vote, shall have the power to modify, amend or rescind its approval of a Special Permit, or to require a change in the approved Special Permit as a condition of its retaining the status of an approved Special Permit. All of the provisions of the issuance of a Special Permit, relating to its submission and approval shall, so far as apt, be applicable to the approval of the modification, amendment or rescission of such approval

of a Special Permit which has been changed under this section (added 12/1/1992).

2. Procedures for projects which require both Site Plan Review and Special Permits under Section 5.

1.) Site plan review of such projects, shall be performed by the Planning Board as part of its review of Special Permit Applications specified in Section 11.3.2 of this ordinance.

2.) The following procedures are in addition to the procedural requirements for Special Permits contained in Section 11.

3.) The applicant shall submit a written application for Site Plan Review, accompanied by a site plan, required submission items, per subsection 12.5 - Content of the Application for Site Plan Review - as well as a completed Form "C" - Submission Checklist for Site Plan Applications Requiring Special Permit. A copy of said Form "C" is included in Section 15 - Illustration Addendum - of this ordinance. Note: Nineteen (19) copies of all required site plan materials shall be submitted with the City Clerk at the time of submission of the application. (amended 5/17/1988, amended 10/21/1997)(Note reference to Section 15 as passed, however Illustration Addendum is Section 16).

4.) The City Clerk, within three business days of receipt of the application, shall distribute 7 copies of the application to the Planning Board, 9 copies to the City Council and 1 copy each to the Conservation Commission, and City Engineer for review and comment. (amended 5/17/1988).

5.) The Planning Board may hold a meeting for involved City Departments and the public to discuss the project.

6.) The Planning Board shall issue a report to the City Council within 45 days from the filing of the Site Plan Review application. Failure to do so shall constitute approval. (amended 5/17/1988).

7.) The Planning Board may recommend appropriate conditions, limitations, safeguards, and improvements which the developer should provide in order to insure compliance with the terms of approval of the Site Plan. The foregoing may include, without limitation, the following: Improvements to existing water and sewerage facilities; improvements to existing intersections or streets.

8.) The City Council shall not issue the Special Permit unless it finds that the conditions specified in Section 11.5, Conditions for Special Permits, have been met, and unless it has considered the comments and recommendations of the Planning Board if such have been submitted. Where the recommendations of the Planning Board have not been accepted, the City Council shall state its reasons in writing.

**12.5 <u>Content of the Application for Site Plan Review</u>**

Application for Site Plan Review shall include the following:

1. Name and address of the applicant.

2. Statement certifying ownership or prospective ownership of the premises involved, or evidence that the applicant has permission of the owner to make such application.

3. Legal description of, and street address if there is one, of the location of the premises.

4. Plans showing the following:

   1.) existing and proposed buildings.
   2.) existing and proposed contour elevations in two foot increments, or as required by the Planning Board.
   3.) parking areas.
   4.) driveways and access to site.
   5.) facilities for vehicular and pedestrian movement.
   6.) drainage.
   7.) the location, capacity, and projected usage of utilities.
   8.) landscaping, including trees to be retained and removed.
   9.) lighting.
   10.) loading and unloading facilities.
   11.) provisions for refuse removal.

5. Other information, as required by the Planning Board:

   1.) projected traffic volumes and impact.
   2.) parking utilization.
   3.) evidence as to the status of all permit applications to other local, state and federal agencies concerning the project.
   4.) other information as may be necessary to determine compliance with the provisions of this ordinance as required by the Planning Board.

5.) a list of abutters within 300 feet from any property line, as certified by the Board of Assessors.

6) Any plans submitted, deemed as a commercial facility as defined under Title III of the Americans with Disabilities Act (ADA), public accommodation as defined under Title III of the Americans with Disabilities Act (ADA), private club not under Title II of the Civil Rights Act of 1964, or public entity, as defined under Title III of the Americans with Disabilities Act (ADA), with the application shall contain a statement signed by the architect of record as follows: 'These Plans as submitted: 1. _____ Conform to the MAAB Laws and Regulations, 2. _____ Conform to the ADA Law and regulations, 3. _____ Do not conform at this time, 4. Waivers will be filed for the following issue(s) _____. Certified' with the architect's name and stamp affixed thereto. (added 4/25/2005)

**12.6 <u>Conditions</u>**

In reviewing the site plan submittal, the Planning Board shall consider the following and shall render its approval only upon finding the conditions herein specified are met.

1.) Adequacy of the capacity of local streets to accommodate the traffic to be generated by the proposed use. In making this finding, the Planning Board may consider projections of increased traffic volumes due to the proposed development, and the impact of such increases on the levels of service on existing streets.
2.) Adequacy of the arrangement of parking and loading spaces in relation to the proposed uses of the premises;
3.) Adequacy of the methods or treatment, service and disposal of water, refuse, and other wastes resulting from the uses permitted on the site;
4.) Ability of public infrastructure to service the project, including the City's water supply and distribution system, sewage collection and treatment facilities, fire protection, and streets.
5.) Relationship of structures and open spaces to the natural landscape, existing buildings and other community assets in the area and compliance with other requirements of this ordinance;
6.) Protection of adjoining premises against seriously detrimental uses by provision for surface water drainage, sound and sight buffers, and preservation of views, light, and air;
7.) Convenience and safety of vehicular and pedestrian movement within the site, the location of driveway openings in relation to traffic or to adjacent streets and, when necessary, compliance with other regulations for the handicapped, minors and the elderly;

8.) The site plans have conformed with the intent of the Zoning Ordinances.

**12.7 Application Review Fees - Special Municipal Accounts**

When reviewing an application for a Special Permit or Site Plan Review, the Special Permit Granting Authority may determine, by a two-thirds (2/3) majority vote of the sitting quorum, that the assistance of outside consultants is warranted due to the size, scale or complexity of a proposed project or because of a project's potential impacts. By said majority vote, the Special Permit Granting Authority may also require that applicants pay a "review fee" consisting of the reasonable costs incurred by the Special Permit Granting Authority for the employment of outside consultants engaged by the Special Permit Granting Authority to assist in the review of an application.

In hiring outside consultants, the Special Permit Granting Authority may engage engineers, planners, lawyers, urban designers or other appropriate professionals who can assist the Special Permit Granting Authority in analyzing a project to ensure compliance with all relevant laws, ordinance/bylaws, and regulations. The hiring of said consultants shall be in accordance with the requirements of the Woburn Municipal Code, Title 3, Article II, Section 3-12, entitled: Duties - Purchasing Procedures. Under said procedures, consultants may be contracted for their services for a period not to exceed ten years.

Funds received by the Special Permit Granting Authority pursuant to this section shall be deposited with the municipal treasurer who shall establish a special account for this purpose. Expenditures from this special account may be made at the direction of the Special Permit Granting Authority without further appropriation and shall be made only in connection with the review of a specific project or projects for which a review fee has been or will be collected from the applicant. Failure of an applicant to pay a review fee shall be grounds for denial of the application/permit.

Review fees may only be spent for services rendered in connection with the specific project from which they were collected. Accrued interest may also be spent for this purpose. At the completion of the Special Permit Granting Authority's review of a project, any excess amount in the account, including interest, attributable to a specific project, shall be repaid to the applicant or the applicant's successor in interest. A final report of said account shall be made available to the applicant or the applicant's successor in interest. For the purpose of this regulation, any person or entity claiming to be an applicant's successor in interest shall provide the Special Permit Granting Authority with documentation establishing such succession in interest.

Any applicant may take an administrative appeal from the selection of the outside consultant to the City Council when the Planning Board is the Special Permit Granting Authority and the Planning Board when the City Council is the Special Permit Granting Authority. The grounds for such an appeal shall be limited to claims that the consultant selected has a conflict of interest or does not possess the minimum required qualifications. The minimum qualifications shall consist either of an educational degree in, or related to, the field at issue or three or more years of practice in the field at issue or a related field. The required time limit for action upon an application by the Special Permit Granting Authority shall be extended by the duration of the administrative appeal.

In the event that no decision is made by the City Council when the Planning Board is the Special Permit Granting Authority and the Planning Board when the City Council is the Special Permit Granting Authority within thirty days following the filing of the appeal, the selection made by the Special Permit Granting Authority shall stand. A successful appeal to the City Council when the Planning Board is the Special Permit Granting Authority and the Planning Board when the City Council is the Special Permit Granting Authority requires a two-third (2/3) majority vote of the sitting quorum.

(added 5/3/1994, amended 1/29/2001)

**********

# SECTION 13

# SIGN REGULATIONS

## 13.1 Procedures

1. No sign shall be erected, constructed or altered except in conformance with the requirements of this ordinance, unless a variance is granted by the Board of Appeals. The requirements for Menu Board/Order Board and Canopy signs for drive-up customer service facilities are set forth in Section 11.6.10. For signs erected, constructed or altered in Downtown Business (B-D) and Business Neighborhood (B-N) zoning districts the applicant will comply with the sign application requirements set forth in section 13.7 through 13.12 of this ordinance. The Downtown and Business Neighborhood Sign Handbook can be used to assist the applicant in this process but is not to be used as a substitute for this ordinance. The handbook can be obtained in the Department of Inspection Services in City Hall. (amended 8/22/2006)

2. No sign except identification signs not exceeding one (1) square foot in area and attached to a residence or located in the front yard of a residence, shall be erected, constructed or altered without a Building Permit.

3. Applications for a building permit to erect, construct or alter a sign shall be filed with the Building Commissioner. The Building Commissioner may require that additional information be submitted as to the method of construction, installation or location and inform applicants about the sign application requirements in the B-D and B-N zoning districts.

4. Persons seeking a variance from the requirements of this section may apply to the Board of Appeals as set forth in Section 11.

5. Persons aggrieved by the refusal of the Building Commissioner to issue a building permit to erect a sign may appeal to the Board of Appeals as set forth in Section 11. Applicants seeking redress of grievances of decisions and modifications made by the Sign Review Board may appeal to the Planning Board, as indicated in section 13.11 of this ordinance.

(amended 6/25/97)

## 13.2 Signs Permitted in all Districts

In addition to signs permitted under Sec. 13.5 through 13.10 of this ordinance, and other lawfully permitted signs, the following signs are permitted in all districts.

1. Signs erected by or on the order of a governmental agency when limited to governmental purposes and excluding any advertising.

2. Names of buildings, date of erection, monumental citations and commemorative tablets when made a permanent and integral part of a building, not to exceed ten (10) square feet.

3. Banners or flags emblematic of or issued by national, state or local governments.

4. Signs indicating the name and address of the occupant of a dwelling, within a residential structure housing no more than two (2) families, not to exceed on square foot in area. Where a permitted accessory use or occupation exists, such sign shall not exceed two (2) square feet.

5. Clocks and thermometers displaying no information other than the time and temperature.

6. Signs not to exceed two (2) square feet which indicate warnings, hazards or public conveniences such as "no trespass", "beware of dog" or rest room signs.

7. Two (2) signs identifying churches, schools and other institutional uses on each street frontage, one of which may not exceed (20) square feet in area and one of which may not exceed ten (10) square feet in area. One sign per each street frontage may be free-standing and may be used for notices and announcements of services and events.

8. Signs necessary to give clear directions to a parking lot or building entrance on the premises. Such signs shall not exceed four (4) square feet in area, nor shall they stand more than four (4) feet high. Such signs may be located within required yard areas but not closer than five (5) feet from streets or driveways.

9. Customary signs on gasoline pumps indicating in usual form the name, type and price of the gasoline.

10. Temporary Signs as follows:

    a. Temporary identification signs: One temporary identification sign to identify a property or use during the period from the submission of a sign application to the Building Commissioners to the decision, provided that in the event of an unfavorable decision such temporary sign shall be removed forthwith, and provided that the temporary sign conforms with all applicable dimensional regulations of this section.

b. Construction signs: One or more signs on the site during the construction or alteration of a building identifying the building, owner, contractor, architects and engineers and the business to be conducted therein. Such signs shall not exceed in the aggregated thirty-two (32) square feet and shall be removed within forty-eight (48) hours after completion of the construction or alteration.

c. Real estate signs: One unlit sign, not exceeding twelve (12) square feet in residential and mixed use districts and thirty-two (32) square feet in business and industrial districts advertising the sale, rental or lease of the premises or part of the premises or the willingness to build on the premises on which the sign is displayed. Such signs shall be removed within forty-eight (48) hours after the sale, rental or lease. Excluding residential property, any other signs used in connection with the sale, rental or lease of a particular premises, including but not limited to "Open House" special events or directory-type signs, shall be of a carry-away design only, not affixed in any permanent manner and shall be in place for a duration of not greater than forty-eight (48) hours per week.

d. Event signs: Signs not exceeding thirty (30) square feet announcing a fund raising event of a civic, philanthropic, educational or religious organization, displayed on the site of the event or the property of the sponsoring agency and limited to one per each lot, except that if a lot has frontage on more than on e street, there may be a free-standing sign for each street frontage. Such signs shall not be erected before fourteen (14) days preceding the event and shall be removed within forty-eight (48) hours after the event.

e. Yard or garage sale signs: Signs not exceeding five (5) square feet announcing a yard or garage sale which are displayed on private property and limited to one per each premises. Such signs shall not be erected before fourteen (14) days preceding the event and shall be removed within forty-eight (48) hours after the event.

f. Signs to be used for charitable or public purposes but which do not comply with the requirements of this ordinance may be authorized by the Building Commissioner for a period not to exceed thirty (30) days.

11. Signs permitted in this section will be superseded by District Specific restrictions as established in this ordinance.

(Amended 6/25/97)

**13.3 <u>Signs prohibited in all districts</u>:**

1. All non-necessary signs including billboards.

2. Signs which extend more than four (4) feet above the main roof line of the buildings to which they are attached.

3. String lights used in connection with commercial premises with the exception of temporary lighting for holiday decorations.

4. Signs or other advertising devices with visible moving or movable parts or with flashing animated or intermittent illumination. An exception shall be made for time and temperature signs, but only that part of the sign displaying the time and temperature may have visible moving or intermittent flashing parts.

5. Portable or movable signs such as those used in connection with gas filling stations, automobile dealers and garages including trailer signs and signs affixed to or painted on a vehicle permanently parked on the premises so as to serve as a sign. An exception shall be made for signs painted or affixed to vehicles temporarily parked on the premises.

6. No signs shall be affixed in a permanent manner to any utility pole or poles located along a way in the City of Woburn in connection with the private activity, business, enterprise or event such as, but not limited to, the sale, rental or lease of a premises directory to a private business operation or any other private activity.

( amended 6/25/97)

**13.4 <u>General Requirements for Signs</u>**

1. Required setbacks for signs shall be as specified in Sec. 6 except as provided in Sec. 13.2, 13.7.2 and 13.10.1.2.

2. All signs and the immediate area surrounding free standing and ground signs must be maintained in good repair and fee of rubbish and weeds.

3. The Building Commissioner is authorized to order the repair or removal of any sign and its supporting structure that in the judgment of the Building Commissioner is dangerous, or in disrepair or which is erected or maintained contrary to this by-law. Such repair or removal shall be the responsibility of the building owner and must be completed within thirty (30) days of notification by the Building Commissioner. Appeals from the Building Commissioner's order shall be held by the Board of Appeals.

4. No sign shall be placed in a way that casts reflection upon any dwelling.

5. All sign illumination shall be interior, non-exposed or shielded exterior illumination directed solely at the sign. Illumination shall be steady and stationary.

6. No sign or its illuminator shall by reason of its location, shape, size or color create, in the opinion of the Chief of Police, a driving hazard to vehicles or obstruct the effectiveness of any official traffic sign, traffic signal or traffic marking.

7. No free-standing pole or pylon sign, nor any ground sign greater than three (3) feet and less than ten (10) feet in height shall be located within a triangular area formed in the following manner: by a front lot line or railroad track, a street intersecting such front lot line or track and a straight line which connects points along the aforesaid lines thirty five (35) feet from their intersection.

8. No sign shall be maintained which advertises a product no longer sold or a commercial enterprise no longer in operation on the premises upon which the sign is located. Except for allowed real estate "For Sale" or "For Lease" signs, no sign shall remain in place in or on the vacated premises for more than thirty (30) days from the day of vacancy. No holiday signs or decoration shall be posted more than sixty (60) days prior to any holiday or remain posted more than sixty (60) days after any holiday.

9. On signs which contain a registered trademark or portray a specific commodity for sale, said trademark or portrayal may not occupy more than ten (10) percent of the sign area unless sale or production of the commodity is the principal activity conducted therein.

10. Any requirement set forth in this section will be superseded by District Specific requirements as established in this ordinance.

(amended 6/25/97)

**13.5 <u>Non-Conforming Signs</u>:**

Signs erected prior to the adoption of this ordinance may continue to be maintained provided that no such sign is enlarged, redesigned or altered in any way except to conform to the requirements of this ordinance or by finding in accordance with Section 7.3 of this ordinance.

The exemption from the requirements of this ordinance noted in the previous paragraph shall terminate with respect to any sign which:

1. Advertised products or activities no longer sold or carried on at the premises.

2. Is not repaired within thirty (30) days of notice of required repairs as ordered by the Building Commissioner.

3. Is a temporary sign or temporary window sign existing more than ninety (90) days from the expiration of the appeal period established by the adoption of the B-D and B-N Sign Ordinance amendments by the Woburn City Council on June 25, 1997.

4. Exists in the B-D and B-N districts five years from the expiration of the appeal period established by the adoption of the B-D and B-N Sign Ordinance amendments by the Woburn City Council on June 25, 1997 that do not comply to those amendments.

(amended 6/25/97)

**13.6 <u>Sign Regulations for Residential Districts</u>**

1. Permitted Signs:

   1) One sign displaying the name of the occupant and address of the premises for each dwelling within a residential building housing not more than two (2) families.

   2) One principal wall sign, or one free-standing sign not to exceed ten (10) square feet for each residential building housing more than two (2) families, or in the case of a group of such buildings forming a single housing development, there may be, in addition, one secondary wall sign for each separate building in a group of such buildings.

   3) Signs indicating "entrance", "exit", "parking", or the like, erected on a premises for the direction of persons or vehicles.

   4) One wall sign and one freestanding sign for each permitted non-residential or valid non-conforming use.

2. Dimensional Regulations

   1) Identification signs: No greater than one (1) sq. ft., except in the case of an identification sign for a permitted occupation or use, where the area shall be no greater than two (2) square feet.

   2) Principal wall sign: Area shall be no greater than ten (10) square feet.

      Freestanding sign: Area shall be no greater than ten feet.

      Secondary wall sign: Area shall be no greater than two (2) square feet.

3) Signs indicating entrance, exit, parking or the like:

Area shall be no greater than three (3) square feet.

4) Wall sign and freestanding sign for non-residential or valid non-conforming use: Area for each sign shall be no greater than twenty (20) square feet.

## 13.7 Sign Regulations in Downtown Business (B-D) and Neighborhood Business (B-N) Districts

The purpose of the regulations in the B-D and B-N Districts is to instill and preserve the traditional New England style of architecture present in these areas and enhance the quality and value of these districts for all the citizens of Woburn.

1. Permitted Signs:

   1. One primary wall sign for each establishment in the structure.

   2. One secondary wall sign for each separate entrance to the structure or frontage on a street or parking area, except there shall be no more than two (2) secondary signs for each structure. Secondary signs may not be erected on the same wall containing the principal sign.

   3. One directory sign for each separate entrance.

   4. Awning signs.

   5. Window signs.

2. Dimensional regulations:

   1. Primary wall signs: One (1) permanent wall sign not to exceed one (1) square foot for each lineal foot of sign frontage and not to exceed thirty-six (36) inches in height. The maximum allowable size is fifty (50) square feet. The sign must be place in the building's sign band, if one exists, and the sign must be place so it does not obscure architectural detail of the building and that the top of such sign be placed no higher than whichever of the following is lowest: twenty (20) feet above grade, bottom of the sills of the first level of windows above the first story or the height of the building lien. The sign shall project no more than twelve (12) inches out from the building and letters in the sign shall not be larger than two and one-half (2 1/2) feet high. Mounting hardware shall be place to minimize its view from the sidewalk. If architectural detail of the building necessitates the sign may be broken

up into two (2) sections, provided that the sign is still within the sign band and the total area of both sections does not exceed one (1) square foot for each lineal foot of sign frontage and not to exceed thirty (36) inches in height. The maximum allowable size is fifty (50) square feet. Signs not overhanging a Public Way may project thirty-six (36) inches out from a building.

2. Free standing sign: One (1) free standing sign is allowed when the building has a set back of twenty (20) feet or more. This sign will not exceed one half (1/2) of a square foot for each lineal foot of building frontage and not to exceed fifteen (15) feet in height. The maximum allowable size is thirty (30) square feet per side of a double faced sign. A free standing sign post must be a minimum of five (5) feet away from the lot line and/or driveway.

3. Secondary wall signs: One per secondary wall. Area of each secondary wall sign shall be no greater than one half (1/2) the area permissible for the primary wall sign or it will not exceed one half (1/2) of a square foot for each lineal foot of secondary building frontage and not to exceed thirty-six (36) inches in height. The maximum allowable size is twenty-five (25) square feet.

4. Directory signs: Area shall be no greater than one (1) square foot per occupant. One (1) sign per entrance.

5. Awning signs: One (1) awning sign is permitted per ground floor use provided it is located on the valance of the awning that letters are in a maximum of one (1) line and are no larger than six (6) inches in height. Awnings will not exceed four (4) feet in height from the bottom of awning and will not project more than three (3) feet from the wall. Signage on valance of awning will not be included in total calculation of sign area. The minimum allowable height will be eight (8) feet from bottom of awning to ground.

6. Permanent window signs:

    1. Upper floor uses: One (1) sign is permitted per window and a maximum of two (2) window signs per use for businesses on upper floors provided that the sign (s) does not exceed twenty-five (25) percent of the area of any window. Lettering on the glass is preferred.

    2. Ground floor uses: Any number of window signs are permitted for the ground floor provided they do not cover more than twenty-five (25) percent of any window. Lettering on the glass is preferred.

7. Temporary window signs and real estate signs:

    Temporary signs, placed in windows pertaining to special sales or events, are

permitted provided that the signs do not exceed twenty-five (25) percent of the total window area inclusive of permanent window signs. Not to exceed fifty (50) percent of the allowed primary sign area. Real estate advertisement signs are not to exceed sixteen (16) square feet and only one is allowed per establishment. These signs are not subject to Sign Review Board Approval.

3. Prohibited Signs:

a. Luminescent, phosphorescent, "Day-Glow" or equivalent paints, dyes or other material used on signs.

b. Roof Signs.

c. Marquee Signs.

d. Movable chassis mounted signs.

e. Internally illuminated letters or signs and framing substructures of such signs, except for time and temperature signs and service stations.

f. Signs illuminated by other than a stationary white or off white steady light.

g. Signs containing specific brand names or trademarks unless it is the principle commodity for sale at the location being marked.

h. Projecting signs over a public right of way.

i. Illuminated awning lettering and awnings not made from a canvas fabric.

j. Signs made of plywood (except framed MDO plywood), signs not made from a substantial product, anything lesser than a hard wood (example: Pine or Bass)

11. Signs prohibited by section 13.3 of this ordinance and any other sign not specifically permitted by this ordinance. (numbered as passed)

(amended 6/25/97)

**13.8 <u>Sign Regulations for Special Mixed Use Districts (S-1)</u>**

1. Permitted signs for dwelling signs and dimensional requirements permitted in residential districts:

1) One sign displaying the name of the occupant and address of the premises for each dwelling within a residential building housing not more than two (2) families.

2) One principal wall sign, or one free-standing sign not to exceed ten (10) sq. ft. for each residential building housing more than two (2) families, or in the case of a group of such buildings forming a single housing development, there may be, in addition, one secondary wall sign for each separate building in a group of such buildings.

3) Signs indicating "entrance", "exit", "Parking", or the like, erected on a premises for the direction of persons or vehicles.

4) One wall sign and one free-standing sign for each permitted non-residential or valid non-conforming use.

2. Dimensional Regulations:

1) Identification signs: No greater than one (1) sq. ft., except in the case of an identification sign for a permitted occupation or use, where the are shall be no greater than two (2) sq. ft.

2) Principal wall sign: Area shall be no greater than ten (10) sq. ft.

Free-standing sign: Area shall be no greater than ten (10) sq. ft. Secondary wall sign: Area shall be no greater than two (2) sq. ft.

3) Signs indicating entrance. exit, parking or the like: Area shall be no greater than three (3) sq. ft.

4) Wall sign and free-standing sign for non-residential or valid non-conforming use: Area for each sign shall be no greater then twenty (20) sq. ft.

For other uses, signs and dimensional requirements as permitted in neighborhood and Downtown Business Districts:

1. Permitted signs:

1) One primary wall sign for each establishment in the structure.

2) One secondary wall sign for each separate entrance to the structure or frontage on a street or parking area, except there shall be no more than two (2) secondary signs for each structure. Secondary signs may not be erected on the same wall as the principal sign.

3) One directory sign for each separate entrance.

4) Marquee signs for theaters or other structures whose architectural features make such signs suitable.

5) Window signs and awning signs.

2. Dimensional regulations:

1) Primary wall sign: Total area of all primary wall signs shall be no greater than ten (10) percent of the facade of the structure.

Where two or more establishments occupy the same structure, the permissible area of the principal sign specified above may be divided among two or more signs.

2) Secondary signs: Area of all secondary signs shall be no greater than one-half the area permissible for the primary wall sign.

3) Directory sign: Area shall be no greater than one (1) sq. ft. per occupant or tenant.

4) Marquee sign: No portion of the sign shall extend above the roof line of the structure.

5) Awning signs: Sign lettering shall not occupy more than twenty (20) percent of the awning area.

6) Window signs: Area shall not exceed twenty-five (25) percent of the window in which it is located.

## 13.9 Sign Regulations for Highway Business Districts (B-H), Interstate Business (B-I) and Industrial Districts

1. Permitted signs:

1) One primary wall sign for each tenant in the structure.

2) One secondary wall sign for each separate entrance to the structure of frontage on a street or parking area, except there shall be no more than two (2) secondary signs for each structure.

Secondary signs may not be erected on the same wall as the principal sign.

3) One directory sign for each separate entrance.

4) Window signs and awning signs.

5) One primary roof sign or one primary free-standing sign per lot. In the case of roof signs and free-standing signs having two sides, both sides shall include identical language only.

2. Dimensional Requirements:

1) Primary wall signs: Total area of all primary wall signs shall be no greater than twenty (20) percent of the facade of the first two stories of the structure. Where more than one tenant occupies the same structure, the permissible area of the primary sign specified above may be divided among two or more tenants. For the purposes of this section, a structure shall be considered to have one (1) façade and that being the side of the structure located along the front lot line.*
*(See definition for front lot line, Sec. 2.)

2) Secondary wall signs: Area of all secondary wall signs shall be no greater than one-half the area permissible for the primary wall sign.

3) Directory signs: Area shall be no greater than one (1) sq. ft. per occupant or tenant.

4) Awning signs: Sign lettering shall not occupy more than twenty (20) percent of the awning area.

5) Window signs: Area shall not exceed twenty-five (25) percent of the window in which it is located.

6) Primary free-standing signs: Area shall not exceed one hundred (100) sq. ft. If the sign has two (2) sides, each side shall not exceed one hundred (100) sq. ft; height shall not exceed thirty (30) ft. above the ground.

7) Primary Roof signs: Area shall not exceed one hundred (100) sq. ft. If the sign has two (2) sides, each side shall not exceed 100 sq. ft.

8) Gasoline stations: Gasoline stations may affix to a single wall of the structure the total amount of permitted sign area in order to indicate separate operations or departments.

**13.10 <u>Sign Regulations for Office Park (OP), Industrial Park (IP) and Industrial General (IG) Zoning Districts</u>.**

1. Permitted signs:

1) One primary wall sign for each tenant in the structure.

2) One secondary wall sign for each separate entrance to the structure or frontage on a street or parking area, except there shall be no more than two (2) secondary signs for each structure. Secondary signs may not be erected on the same wall as the principal sign.

3) One directory sign for each separate entrance.

4) Window signs and awning signs.

5) One primary roof sign or one primary free-standing sign per lot. In the case of roof signs and free-standing signs having two sides, both sides shall include identical language only.

6) Secondary and cluster free-standing signs shall not be located closer than five (5) ft. from any driveway or street. All permits for secondary and cluster free-standing signs shall require the written approval of the Chief of Police, whose approval shall not be withheld unless the sign's location creates a situation which the Chief of Police believes constitutes a traffic hazard. One secondary free-standing sign for the first 25,000 sq. ft. or portion thereof of floor area within the building. If there are two or more tenants operating in a building of over 25,000 sq. ft., one additional secondary free-standing sign is allowed for each additional 25,000 sq. ft. or portion thereof of floor area up to a maximum of 4 signs, prior to the allowance of an additional (separate) secondary free-standing sign; other provisions for secondary free-standing signs and cluster free-standing signs are provided below. In the case of secondary free-standing signs having two (2) sides, both sides shall include identical language only. An additional section to identify building address may be included on top of the lawfully existing cluster sign.

2. Dimensional Requirements:

1) Primary wall signs: Total area of all primary wall signs shall be no greater than ten (10) percent of the facade of the first two stories of the structure. Where more than one tenant occupies the same structure, the permissible area of the primary sign specified above may be divided among two or more tenants. For the purposes of this section, a structure shall be considered to have one (1) facade and that being the side of the structure located along the front lot line.*

*(See definition for front lot line, Sec. 2.)

2) Secondary wall signs: Area of all secondary wall signs shall be no greater than one-half the area permissible for the primary wall sign.

3) Directory signs: Area shall be no greater than one (1) sq. ft. per occupant or tenant.

4) Awning signs: Sign lettering shall not occupy more than twenty (20) percent of the awning area.

5) Window signs: Area shall not exceed ten (10) percent of the window in which it is located.

6) Primary Roof signs: Area shall not exceed one hundred (100) sq. ft. If a roof sign has two (2) sides, each side shall not exceed 100 sq. ft.

7) Gasoline stations: Gasoline stations may affix to a single wall of the structure the total amount of permitted sign area in order to indicate separate operations or departments.

8) Primary free-standing signs: Area shall not exceed forty (40) sq. ft. If the sign has two (2) sides, each side shall not exceed forty (40) sq. ft; height shall not exceed thirty (30) ft. above the ground.

9) Secondary free-standing signs: Area shall not exceed fifteen (15) sq. ft. If the sign has two (2) sides, each side shall not exceed fifteen (15) sq. ft.; and the top of the sign shall not exceed six (6) ft. above the surrounding ground elevation.

10) Secondary free-standing cluster sign: Maximum of two (2) sign panels high and two (2) sign panels wide. Total aggregate area of cluster sign not to exceed sixty (60) sq. ft.; if sign has two (2) sides, each side shall not exceed sixty (60) sq. ft. Total area of each sign panel in the cluster shall not exceed fifteen (15) sq. ft. per side. The top of the sign shall not exceed nine (9) ft. from the surrounding ground elevation. The address section may be a maximum of two (2) ft. high and ten (10) ft. long to be placed directly on top of the cluster sign. The address section only may exceed the nine (9) ft. but in no case shall the entire sign exceed eleven (11) ft. from the surrounding ground elevation.

11) No primary, secondary or cluster free-standing sign shall be located within two hundred (200) ft. of any existing or proposed primary, secondary or cluster free-standing sign on the same lot or in the same park.

12) Provided that proposed signage meets the minimum distance separation and all other requirements of this section, any grouping of two or more buildings under common management or ownership, and situated on contiguous lots with frontage on two streets, shall be allowed signage on either street but not on both as if all the buildings in the park were on the same lot.

(Secs. 8 through 10 amended 6/21/94)

## 13.11 Sign Review Board (SRB) for Downtown and Business Neighborhood Zoning Districts

In keeping with the declaration of policy herein, and in recognition of the difficulty in regulating the use of signs in the Downtown Business (B-D) and Business Neighborhood (B-N) zoning districts, there is hereby created a Sign Review Board whose duties under this Ordinance are as follows:

1. Within the B-D and B-N zoning districts the Sign Review Board shall approve or disapprove all signs now or hereinafter erected, constructed or altered in accordance with this ordinance, except any temporary signs allowed by this ordinance will not be subject to Sign Review Board approval.

2. The Sign Review Board shall not approve the erection or continued existence of any sign in said districts which are expressly prohibited by this ordinance or the city's Building Code.

3. In approving or disapproving any particular sign not expressly allowed without a permit by this ordinance, the Sign Review Board (SRB) shall take into consideration the following:

   a. The Zoning District, the use existing in the area, and the general character of the area.

   b. The economic and business interests of the party having erected or proposing to erect the sign.

   c. The aesthetic appearance of the sign and its overall affect on the surrounding area and insuring that the sign is consistent with the dimensional regulations set forth in Section 13.7 of this ordinance. The design guidelines indicated in the Downtown and Business Neighborhood Sign Handbook may be used for reference purposes.

   d. The purpose for which the sign had been or is to be erected.

4. The Sign Review Board shall be composed of five (5) members, appointed by the Mayor, and confirmed by a majority of the City Council. Three (3) members shall be residents of the City of Woburn and two (2) shall be members of the downtown business community. In addition, a resident of the City of Woburn be appointed by the Mayor and confirmed by the City Council for a two (2) year term to serve as an associate member of the Sign Review Board. The associate shall sit in place of any member incapacitated by personal interest, illness or absence. Within seven (7) days after the appointment and confirmation of the initial Board as fore said, the Board shall meet and elect one of its members as Chairman, a Vice-Chairman and a Secretary

and within thirty (30) days after, shall promulgate rules and regulations for the conduct of its business. Such rules and regulations shall be made available in printed form through the Planning Board of the City of Woburn. Said rules and regulations shall contain the following:

1. The (SRB) shall hold open public meetings at regularly scheduled times, notice by mail shall be given to all parties of interest and the agenda of said meeting shall be published in a regular local newspaper not less than twenty-four (24) hours prior to said meeting and the (SRB) shall not delay taking action on any application for a particular sign in accordance with its rules and regulations.

2. Any action taken by the (SRB) shall require a majority of the sitting quorum thereof. The term of each appointment shall be five (5) years from the date thereof, except of the original members, one shall serve for a period of one (1) year, a second member shall serve for a period of two (2) years; a third member shall serve for a period of three (3) years; a forth member shall serve for a period of four years; a fifth member shall serve for a period of five (5) years. Should any vacancy occur in membership, the member appointed to fill said vacancy shall serve for the remaining portion of the term of the member creating the vacancy.

5. In disapproving a sign application the (SRB) shall so inform the owner thereof by regular mail and include in the decision any and all reasons for disapproval. In the case of disapproval, the applicant may appeal to the Planning Board, who shall conduct a public hearing at a regularly scheduled meeting. Within thirty (30) days of receipt of the written appeal request to the Planning Board, the Board shall conduct a public hearing, at the applicant's expense, notice of which shall indicate time, place and the subject matter, sufficient for identification, and it shall be published in a newspaper of general circulation in the city, with the first publication being not less than fourteen (14) days before the day of such hearing. The Planning Board shall also send by regular mail, at the applicant's expense, a copy of the public hearing notice to the applicant and to all owners of land abutting upon the land included in such sign permit application, as appearing on the most recent tax list.

(amended 6/25/97)

### 13.12 Permit Requirements and Sign Review Process for the Downtown Business (B-D) and Business Neighborhood (B-N) Zoning Districts

Except as otherwise provided in this ordinance, no sign shall be erected, constructed or existing sign altered in any way, in the Downtown Business (B-D) and Business Neighborhood (B-N) zoning districts, without review and approval by the Sign Review

Board (SRB) and without issuance of a Building Permit as required by the Building Commissioner. All such signs shall be subject to the following review process:

1. Application: The applicant shall submit to the Building Commissioner nine (9) copies of the application form describing the design of the proposed sign. Said design will include types of materials used, types of lettering and lighting if present, a scale drawing and a legend showing maximum dimensions and proposed dimensions, along with a building elevation, cross-section, site-plan, if applicable, and photograph showing the existing building or site, and such other materials as may be required by the Sign Review Board.

2. Sign Application Fee: The applicant shall submit to the Building Commissioner a sign application fee, along with the application form and other required materials. Fees for the sign application shall be set by the City Council.

3. Distribution of Sign Application: The Building Commissioner shall file one (1) copy in the City Clerk's Office and forward the application and all required materials as follows:

   a. Five (5) copies to the Sign Review Board.

   b. One (1) copy to the Downtown Committee or future Downtown Coordinator.

   c. One (1) copy to the Planning Board.

   d. One (1) copy to be retained by the Building Commissioner.

4. Sign Review Board Decision: Within twenty-one (21) days of the receipt of the application, including all required materials, the (SRB) shall meet and review said materials. This review process shall be open to the public, including the applicant and/or his/her representative (s). The sign review meeting(s) shall not require the publishing of public hearing notices nor notification of abutters. Should the (SRB) fail to take action to approve or amend/modify with approval or deny the sign application within twenty-eight (2) days from the application submission date, the requested (SRB) decision shall be deemed favorable.

5. Building Permit: Upon approval by the (SRB), the plan or modified plan will be forwarded to the Department of Inspection Services for final approval and issuance of a Building Permit

6. Maintenance and Enforcement:

   1. All signs and their devices supporting them shall be kept in good repair and safe condition. This shall mean the absence of existing rust, of broken or dangling parts,

and of cracked, peeling and flaking paint, the replacement of defective parts, and clean copy that is not obscured.

2. The Building Commissioner or his authorized designate is authorized to order the repair or removal of any sign and its supporting structure which, in the judgment of the Building Commissioner, is deemed unsafe, in disrepair or which is erected or maintained contrary to this ordinance.

3. Any person, firm or corporation violating any section or provision of this ordinance which pertains to signage shall be issued a warning and be given seven (7) days to comply. If violation continues unabated past such time, a ticket with a fine of twenty-five dollars ($25.00) shall be issued for each day willful violation continues. The Building Commissioner or his authorized designate shall be responsible for issuing such warnings and tickets for such violations to the sign provision of this ordinance.

(amended 6/25/97)

# SECTION 14

# TOWNHOUSE DEVELOPMENT IN RESIDENTIAL DISTRICTS R-1 AND R-2

## 14.1 Purpose

The purpose of a townhouse development in residential districts is to provide for residential development which:

1. Results in the permanent preservation of open space which is of use and value to the City and which would not normally be preserved under development undertaken according to other sections of the ordinance.

2. Encourages creative site planning which is sensitive to the natural characteristics of the land.

3. Provides for economical development, efficient provisions of public services and minimizes road and driveway construction and paving.

4. Promotes aesthetics and other amenities.

## 14.2 Procedures

Per Section 5 of this Ordinance, application for a townhouse development in R-1 and R-2 residential zoning districts shall require a Special Permit in accordance with Section 12.3.2, which constitutes Site Plan Review of the application by the Planning Board, as specified in Section 11.3.2, and the City Council shall be the Special Permit Granting Authority. The procedural review of the Special Permit Granting Authority, Planning Board and other boards and departments of the City shall be in accordance with said Sections. Density provisions for townhouse developments in R-1 and R-2 zones are provided in Section 6.1 - Table of Dimensional Regulations.

## 14.3 Content of the Application

In addition to the requirements for a Special Permit application, contained in Sections 11 and 12 of this Ordinance, application for a townhouse development shall also include plans and narrative descriptions as follows:

1. The size of the tract in acres.

2. The number of the proposed dwelling units, bedroom count for each unit and the net living area of each in square feet.

3. The proposed location and height of all proposed structures.

4. Topographic plan, including a clear and accurate disclosure of the grades of the existing terrain. For the portion of land proposed for development, the plan shall indicate large trees (18 inches in diameter and greater), ledge outcrops, natural water courses, proposed finish grades and existing buildings, together with fences walls, shall be shown. Also, the site plan shall be drawn to a scale of l inch = 40 ft. and existing buildings, together with fences and walls, shall be shown. Approximate grades shall also be shown.

5. The acreage of the proposed permanent open space parcel and location and acreage of any wetlands on the tract as defined by General Laws Chapter 131, Section 40.

6. A description of the intended uses of the proposed open space parcel, and an analysis of its value to the City, with respect to natural resource preservation, environmental protection and accessibility by the general public.

7. A description of the proposed ownership for passive recreation/naturalist uses and maintenance of the proposed open space parcel.

8. A description of all dwelling units on properties abutting the tract.

9. A description of the neighborhood in which the tract lies, including utilities and other public facilities, and the impact of the proposed plan upon them.

10. Notwithstanding anything to the contrary contained within this Zoning Ordinance, 19 sets of Site Plans shall be submitted for application for townhouse developments.

11. For purposes of townhouse developments, design standards for bridges, drainage, water and sewage systems, easements, open spaces, protection of natural features, loaming, monuments and markers, street lighting, public utilities, street and regulatory signs, fire alarm systems, side slopes, inspection and construction control procedures shall comply with Sections 111 and IV of the 1987 Planning Board Land Subdivision Rules and Regulations and as may be amended.

**14.4 <u>General Requirements</u>**

1. Townhouse development in the R-1 and R-2 zoning districts shall require a minimum tract size of 18 acres and be comprised of clustered townhouse dwellings, which shall be separated from the dedicated open space parcel.

2. The total allowed number of units for a townhouse development shall be 2.5 units per acre, multiplied by the total area (i.e., 5 units per acre of the tract to be developed)

3. No dwelling unit shall exceed two and one half stories, nor be greater than thirty feet in height.

4. Any part of the developed tract that abuts the open space tract shall be subject to a minimum of a 25 foot setback.

5. Each unit shall have separate entries and off-street parking or garages. Two parking spaces per unit shall be provided.

6. Townhouse clusters shall consist of no more than 6 townhouses per cluster.

7. Townhouse clusters shall be separated from each other by a minimum distance of 30 ft. in all directions.

8. For purposes of Section 14 only, townhouse clusters as that term is used herein may include multifamily dwelling units containing up to four (4) stacked units per building. No more than fifteen (15%) percent of the total units in the development can be stacked. Stacked units will only be allowed in developments under Section 14 if the number of total units in the townhouse development does not exceed 112. The purpose of stacking is to minimize site disturbance, provide for additional open space, create more diversity and affordability in the unit types. (added 4/4/2017)

**14.5 <u>Requirements for Open Space</u>**

1. The open space parcel shall comprise 50% of the total tract, and this parcel shall comprise, at minimum 70% upland area.

2. In addition to the density provisions included in this section, townhouse developments shall comply with all other applicable R-1 and R-2 density provisions, per Section 6.1, Table of Dimensional Regulations.

3. All land shown on a plan for which a Special Permit is granted under this Section, which is not included in the building footprints, roadways or easements shall comprise one contiguous tract.

   The open space parcel shall be conveyed to the City's Conservation Commission, for the exclusive purposes of conserving open space and promoting passive recreation/naturalist uses of the premises. The Conservation Commission shall maintain said parcel in perpetuity as open space.

4. Factors relevant to determine that the open space parcel should be permitted:

a. Said open space parcel is in the public interest;

b. It provides for the preservation of significant natural features;

c. It will minimize site disturbance, including soil removal and tree cutting; and

d. accommodates the site's characteristics.

e. Land containing hazardous materials shall be prohibited from inclusion in the designated Open Space parcel.

f. All provisions of M.G.L. Chap. 21E, -Mass. Oil and Hazardous Material Release Prevention and Response Act, have been met.

Wherein a townhouse development will be developed in phases, interim protection of the open space parcel shall be provided by recorded covenant of the landowner. The covenant shall be submitted to the Special Permit Granting Authority for review and approval prior to recording.

Land within the development comprised of building footprints, parking areas and areas owned individually or collectively by members of the townhouse association shall be conveyed and maintained, per the following guidelines:

The developer shall be responsible for the maintenance of the common land and any other facilities to be held in common until such time as the townhouse owner's association is capable of assuming said responsibility. In order to insure that the association will properly maintain the land deeded to it under this section, the developer shall cause to be recorded at the Middlesex South Registry of Deeds, a Declaration of Covenants and Restrictions, which shall, at a minimum, provide for the following:

1) As a requirement of ownership of any townhouse unit and/or any individually owned property within the development tract, membership in an established townhouse owner's association shall be mandatory.

2) In order to insure that the subject areas are maintained in a condition suitable for the uses approved by the townhouse owner's association, provision for maintenance assessments of all townhouse units shall be established. Failure to pay such assessments by any townhouse owner shall give cause for the owner's association to establish a lien(s) on the subject property.

**14.6 <u>Conditions</u>**

No special permit for a townhouse development shall be issued unless the requirements enumerated in this section, and other sections of this Ordinance, are met, and the Special Permit Granting Authority finds:

1. Preservation of the open space will be beneficial to the City and/or residents of the tract, by virtue of the creation of usable open space for passive recreation/naturalist purposes, preservation of scenic areas of views, preservation of natural resources and contributing to the net work of open space, as envisioned in the City's Open Space Plan.

2. The townhouse development will result in a development that is equal or greater than surrounding conventional subdivisions, which are allowed by right in R-1 and R-2 residential districts. Especially in regard to location of units, topography of the site, efficient provisions of public services and reduction in the amount of roadway and driveway constriction, therefore creating less storm water run-off and roadway maintenance costs.

3. The townhouse development will have no adverse impact on the quality and supply of groundwater.

4. Proper arrangements have been made for public access to the open space parcel, including emergency municipal services.

5. Suitable arrangements for management and maintenance of the open space parcel have been made.

6. The townhouse development will have no more adverse impact on nearby developed neighborhoods, by virtue of increased traffic, impairment of privacy and views, than would conventional subdivision of the tract.

(amended 6/19/96)

**********

[This page intentionally left blank.]

# SECTION 15

# GROUNDWATER PROTECTION DISTRICT

## 1. Purpose of District

a. To promote the health, safety and general welfare of the community by ensuring an adequate quality and quantity of drinking water for the residents, institutions and businesses of the City of Woburn.
b. To preserve and protect existing and potential sources of drinking water supplies.
c. To conserve the natural resources of the city.
d. To prevent temporary and permanent contamination of the environment.
e. To protect the community from the detrimental use and development of land and water within the Ground Water Protection District.

## 2. Scope of Authority

The Groundwater Protection District is an overlay district superimposed on the zoning districts. This overlay district shall apply to all new construction, reconstruction or expansion of existing buildings and new or expanded uses. Applicable activities or uses in a portion of one of the underlying zoning districts which fall within the Groundwater Protection District must additionally comply with the requirements of this district. Uses that are prohibited in the underlying zoning districts shall not be permitted in the Groundwater Protection District.

## 3. Definitions

For the purpose of this section, the following words and phrases shall have the following meanings:

Aquifier: Geologic formation composed of rock, sand or gravel that contains significant amounts of potentially recoverable water.

Groundwater Protection District: The zoning district defined to overlay other zoning districts in the City of Woburn. The Groundwater Protection District may include specifically designated recharge areas.

Impervious Surface: Material or structure on, above or below the ground that does not allow precipitation or surface water to penetrate directly into the soil.

Mining: The removal or relocation of geologic materials such as topsoil, sand, gravel, metallic ores or bedrock.

Recharge Area*: Areas that collect precipitation or surface water and carry it to acquifiers. Recharge areas may include areas designated as Zone I, Zone II or Zone III.

Toxic or Hazardous Material: Any substance or mixture of physical, chemical or infectious characteristics posing a significant, actual or potential hazard to water supplies or other hazards to human health if such substance or mixture were discharged to land or water of the City of Woburn. Toxic or hazardous materials include, without limitation, synthetic organic chemicals, petroleum products, heavy metals, radioactive or infectious wastes, acid and alkalis and all substances defined as Toxic or Hazardous under M.G.L. Chaps. 21C and 21E and 310 CMR 30.00, and also include such products as solvents and thinners in quantities greater than normal household use.

*The Mass. Dept. of Environmental Protection defines specific types of recharge areas - Zone II and Zone III - to which certain regulations may apply (See Section 6B). If these zones are part of the District, the following definitions should be included:

Zone II: The area of an aquifier which contributes water to a well under the most severe pumping and recharge conditions that can be realistically anticipated (180 days of pumping at safe yield with no recharge from precipitation), as defined in 310 Code of MA Regulations (CMR) 22.00.

Zone III: The land area beyond the area of Zone II from which surface water and groundwater drain into Zone II, as defined in 310 CMR 11.00.

**4. Establishment and Delineation of Groundwater Protection District**

For the purposes of this district, there are hereby established within the city certain groundwater protection areas, consisting of aquifers or recharge area which are delineated on a map. This map is at a scale of 1 inch to 1,000 feet and is entitled, "Groundwater Protection District, City of Woburn", dated 6/20/95. This map is hereby made a part of the Woburn Zoning Ordinances of 1985 as amended and is on file in the Office of the City Clerk.

**5. District Boundary Disputes**

If the location of the District boundary in relation to a particular parcel is in doubt,

resolution of boundary disputes shall be through a Special Permit application to the Special Permit Granting Authority (SPGA). Any application for a Special Permit for this purpose shall be accompanied by adequate documentation.

The burden of proof shall be upon the owner(s) of the land in question to show where the bounds should properly be located. Professional civil engineer, hydrologist, geologist or soil scientist to determine more accurately the boundaries of the district with respect to individual parcels of land, and may charge the owner(s) for all or part of the cost of the investigation.

**6. <u>Use Regulations</u>**

In the Groundwater Protection District the following regulations shall apply:

A. Permitted Uses

The following uses are permitted within the Groundwater Protection District, provided that all necessary permits, orders or approvals required by local, state or federal law are also obtained:

i. Conservation of soil, water, plans and wildlife;
ii. Outdoor recreation, nature study, boating, fishing and hunting where otherwise legally permitted;
iii. Foot, bicycle and/or horse paths and bridges;
iv. Normal operation and maintenance of existing water bodies and dams, splash boards and other water control supply and conservation devices;
v. Maintenance, repair and enlargement of any existing structure, subject to Section B (prohibited uses) and Section C (special permitted uses);
vi. Residential development, subject to Section B (prohibited uses) and Section C (special permitted uses);
vii. Farming, gardening, nursery, conservation, forestry, harvesting and grazing, subject to Section B (prohibited uses) and Section C (special permitted uses);
viii. Construction, maintenance, repair and enlargement of drinking water supply related facilities such as, but not limited to, wells, pipelines, aqueducts and tunnels. Underground storage tanks related to these activities are not categorically permitted.

B. Prohibited Uses

1. The following uses are prohibited.

i. Landfills and open dumps as defined in 310 CMR 19.006.

ii. Storage of liquid petroleum products, except the following:
   a. Normal household use, outdoor maintenance and heating of a structure;
   b. Waste oil retention facilities required by statute, rule or regulation;
   c. Emergency generators required by statute, rule or regulation;
   d. Treatment works approved under 314 CMR 5.00 for treatment of ground or surface waters.
iii. Landfilling of sludge or septage as defined in 310 CMR 32.05;
iv. Storage of sludge and septage, unless such storage is in compliance with 310 CMR 32.30 and 310 CMR 32.31;
v. Individual sewage disposal systems that are designed in accordance with 310 CMR 15.00 to receive more than 110 gallons of sewage per quarter acre under one ownership per day, or 440 gallons of sewage on any one acre under one ownership per day, whichever is greater, provided that:
   a. The replacement or repair of a system, which will not result in an increase in design capacity, or the design capacity of 310 CMR 15.00, which ever is greater, shall be exempted;
   b. In cluster subdivisions the total sewage flow allowed shall be calculated based on the number of percable lots in the entire parcel.
vi. Storage of deicing chemicals unless such storage, including loading areas, is within a structure designed to prevent the generation and escape of contaminated runoff or leachlate;
vii. Storage of animal manure unless covered or contained in accordance with the specifications of the United States Soil Conservation Service;
viii. Earth removal, consisting of the removal of soil, loam, sand, gravel or any other earth material (including mining activities) to within 6 feet of historical high groundwater as determined from monitoring wells and historical water table fluctuation data compiled by the United States Geological Survey, except for excavations for building foundations, roads or utility works;
ix. Facilities that generate, treat, store or dispose of hazardous waste subject to MGL 21C and 310 CMR 30.00, except the following:
   a. Very small quantity generators as defined and events under 310 CMR 30.000;
   b. Household hazardous waste centers and events under 310 CMR 30.390;
   c. Waste oil retention facilities required by MGL Chapter 21 Section 52A;
   d. Water remediation treatment works approved by DEP for the treatment of contaminated ground or surface waters.
x. Automobile graveyards and junkyards, as defined in MGL Chapter 140B, Section 1;
xi. Treatment works that are subject to 314 CMR 5.00 including privately owned sewage treatment facilities, except the following:
   a. The replacement or repair of an existing treatment works that will not result in a design capacity greater than the design capacity of the existing treatment works;

b. The replacement of existing sub-surface sewage disposal system(s) with wastewater treatment works that will not result in a design capacity greater than the design capacity of the existing system(s).
c. Treatment works approved by the Mass. DEP designed for the treatment of contaminated groundwater.
d. Sewage treatment facilities in those areas with existing water quality problems when it has been demonstrated to the DEP's and the Special Permit Granting Authority's satisfaction both that these problems are attributable to current septic problems and that there will be a net improvement in water quality.

xii. Storage of hazardous materials, as defined in MGL Chapter 21E, unless in a free standing container within a building or aboveground with adequate secondary containment adequate to contain a spill the size of the container's total storage capacity;

xiii. Industrial and commercial uses which discharge process wastewater on-site;

xiv. Stockpiling and disposal of snow and ice containing deicing chemicals if brought in from outside the district;

xv. Storage of commercial fertilizers, as defined in MGL Chapter 128, Section 64, unless such storage is within a structure designated to prevent the generation and escape of contaminated runoff or leachate;

xvi. The use of septic system cleaners which contain toxic or hazardous chemicals.

C. Uses and Activities Requiring a Special Permit

The following uses and activities are permitted only upon the issuance of a Special Permit by the Special Permit Granting Authority (SPGA) under such conditions as they may require:

i. Enlargement or alteration of existing uses that do not conform to the Groundwater Protection District;

ii. The application of pesticides, including herbicides, insecticides, fungicides and rodenticides, for non-domestic or non-agricultural uses in accordance with state and federal standards. The Special Permit shall be granted if such standards are met. If applicable, the applicant should provide documentation of compliance with a Yearly Operating Place (YOP) for vegetation management operations under 333 CMR 11.00 or a Department of Food and Agriculture approved Pesticide Management Plan or Integrated Pest Management (IPM) program under 333 CMR 12.00.

iii. The application of fertilizers for non-domestic or non-agricultural uses. Such applications shall be made in a manner so as to minimize adverse impacts on groundwater due to nutrient transport, deposition and sedimentation;

iv. Those activities that involve the handling of toxic or hazardous materials in quantities greater than those associated with normal household use, permitted in the underlying zoning (except as prohibited under Section B). Such activities shall require a Special Permit to prevent contamination of groundwater.

v. The construction of dams or other water control devices, ponds, pools or other changes in waterbodies or courses, created for swimming, fishing or other recreational uses, agricultural uses or drainage improvements. Such activities shall not adversely affect water quality or quantity;

vi. Any uses that will render impervious more than 15% or 2,500 square feet of any lot, whichever is greater. A system for groundwater recharge must be provided which does not degrade groundwater quality. For non-residential uses, recharge shall be by stormwater infiltration basins or similar system covered with natural vegetation, and dry wells shall be used only where other methods are unfeasible. For all non-residential uses, all such basins and wells shall be preceded by oil, grease and sediment traps to facilitate removal of contamination. Any and all recharge areas shall be permanently maintained in full working order by the owner.

**7. <u>Procedures for Issuance of Special Permit</u>**

A. The Special Permit Granting Authority (SPGA) under this ordinance shall be the City Council. Such Special Permit shall be granted if the SPGA determines, in conjunction with the Board of Health, the Conservation Commission, City Engineer, Dept. of Public Works and Planning Board that the intent of this bylaw, as well as its specific criteria, are met. The SPGA shall not grant a Special Permit under this section unless the petitioner's application materials include, in the SPGA's opinion, sufficiently detailed, definite and credible information to support positive findings in relation to the standards given in this section. The SPGA shall document the basis for any departures from the recommendations of the other city boards or agencies in its decision.

B. Upon receipt of the Special Permit application, the City Clerk shall transmit one copy to the Planning Board, Board of Health, the Conservation Commission, City Engineer and Dept. of Public Works for their written recommendations. Failure to respond in writing within 35 days of receipt by the Board shall indicate approval or no desire to comment by said agency. The necessary number of copies of the application shall be furnished by the applicant.

C. The SPGA may grant the required Special Permit only upon finding that the proposed use meets the following standards, those specified in Section 6 of

this ordinance, and any regulations or guidelines adopted by the SPGA. The proposed use must:

1. In no way, during construction or thereafter, adversely affect the existing or potential quality or quantity of water that is available in the Groundwater Protection District, and;
2. Be designed to avoid substantial disturbance of the soils, topography, drainage, vegetation and other water-related natural characteristics of the site to be developed.

D. The SPGA may adopt regulations to govern design features of projects. Such regulations shall be consistent with subdivision regulations adopted by the municipality.

E. The applicant shall file seven copies of a site plan and attachments. The site plan shall be drawn at a proper scale as determined by the SPGA and be stamped by a professional engineer. All additional submittals shall be prepared by qualified professionals. The site plan and its attachments shall at a minimum include the following information where pertinent:

1. A complete list of chemicals, pesticides, herbicides, fertilizers, fuels and other potentially hazardous materials to be used or stored on the premises in quantities greater than those associated with normal household use;
2. For those activities using or storing such hazardous materials, a hazardous materials management plan shall be prepared and filed with the Hazardous Materials Coordinator, Fire Chief and Board of Health. The plan shall include:
   a. Provisions to protect against the discharge of hazardous materials or wastes to the environment due to spillage, accidental damage, corrosion, leakage or vandalism, including spill containment and clean-up procedures;
   b. Provisions for indoor, secured storage of hazardous materials and wastes with impervious floor surfaces;
   c. Evidence of compliance with the Regulations of the Mass. Hazardous Waste Management Act 310 CMR 30, including obtaining an EPA identification number from the DEP.
3. Proposed down-gradient location(s) for groundwater monitoring well(s), should the SPGA deem the activity a potential groundwater threat.

F. The SPGA shall hold a hearing, in conformity with the provision of MGL Chapter 40A, Section 9, within 65 days after the filing of the application and after the review by the City Boards, Departments and Commissions. Notice of the public hearing shall be given by publication and posting and by first-class

mailing to "parties in interest" as defined in MGL Chapter 40A, Section 11. The decision of the SPGA and any extension, modification or renewal thereof shall be filed with the SPGA and City Clerk within 90 days following the closing of the public hearing. Failure of the SPGA to act within 90 days shall be deemed as a granting of the permit. However, no work shall commence until a certification is recorded as required by said Section 11.

G. Written notice of any violations of this Ordinance shall be given by the Building Inspector to the responsible person as soon as possible after detection of a violation or a continuing violation. Notice to the assessed owner of the property shall be deemed notice to the responsible person. Such notice shall specify the requirement or restriction violated and the nature of the violation, and may also identify the actions necessary to remove and the nature of the violation, and may also identify the actions necessary to remove or remedy the violations and preventive measures required for avoiding future violations and a schedule of compliance. A copy of such notice shall be submitted to the Building Inspector, the Board of Health, Conservation Commission, City Engineer, Dept. of Public Works and Water Department. The cost of containment, clean-up, or other action of compliance shall be borne by the owner and operator of the premises. For situations that require remedial action to prevent adverse impact to the water resources within the Groundwater Protection District, the City of Woburn, the Building Inspector, the Board of Health, or any of their agents may order the owner or operator of the premises to remedy the violation. If said owner and/or operator does not comply with said order, the City of Woburn, the Building Inspector, the Board of Health, or any of their agents, is authorized to enter upon such premises under the terms of the Special Permit or otherwise, may act to remedy the violation. The remediation cost shall be the responsibility of the owner and operator of the premises.

**8. <u>Severability</u>**

A determination that any portion or provision of this overly protection district is invalid shall not invalidate any other portion or provision thereof, nor shall it invalidate any Special Permit previously issued thereunder.

(Added 11/21/95)

**********

# SECTION 16

# ILLUSTRATION ADDENDUM

(See following pages.)

## ATTACHMENT "A" - LOT WIDTH ILLUSTRATION

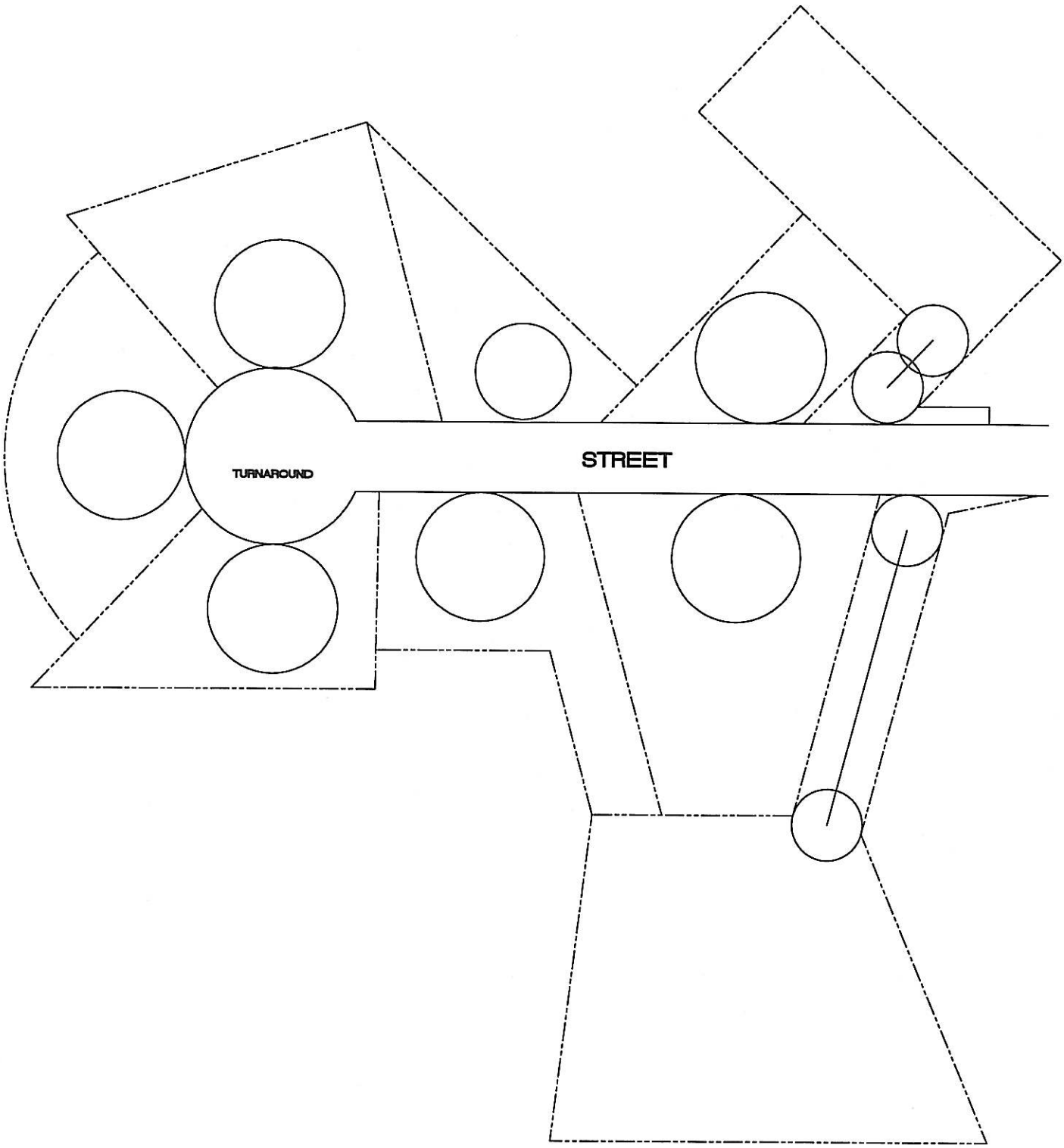

**Form A**
**Submission Checklist for Special Permit Applications**

Applicant: _____ Contact Person: _____ Tel #: _____

Project Description and Address: _____

Date of Application, as stamped by the City Clerk _____ Note: this checklist must be included with the application for Special Permit, per Section 11.4 of the 1985 Woburn Zoning Ordinance, as amended. The applicant shall submit a written explanation for any omitted checklist item(s). For additional information on any checklist item listed below, refer to the Sec. 11 – Special Permits and Variances of the 1985 Zoning Ordinance, as amended.

| Information Required | Applicant's Initials | Staff Initials |
|---|---|---|
| 1. Name and address of the applicant. | | |
| 2. Statement certifying ownership of the premises involved, or evidence that the applicant has permission of the owner to make such application. | | |
| 3. Legal description of, and street address if there is one, of the location of the premises. | | |
| 4. Plans shall show the following: | | |
| a.) existing and proposed buildings; | | |
| b.) existing and proposed contour elevations in two foot increments; | | |
| c.)parking area and utilization; | | |
| d.) driveways and access to site; | | |
| e.) facilities for vehicular and pedestrian movement; | | |
| f.) drainage system and calculations; | | |
| g.) the location, capacity, and projected usage of facilities; | | |
| h.) landscaping, including trees to be retained and removed; | | |
| i.) exterior lighting; | | |
| j.) loading and unloading facilities; | | |
| k.) provision for refuse removal. | | |
| 5. Other information, as may be required: | | |
| a.) projected traffic volumes and impact; | | |
| b.) evidence as to the status of all permit applications to other local, state and federal agencies concerning the project; | | |
| c.) other information as may be necessary to determine compliance with the provisions of this ordinance. | | |
| d.) a list of abutters within 300 ft. from any property line, as certified by the Board of Assessors; | | |
| e.) tax liens on property. | | |

Applicant's signature: _____ Date: _____

Note: If any of the above items are missing or found deficient in any way, the City Council may choose to consider the submission incomplete, and as such, the application may be subject to denial.

FOR CITY CLERK USE:
Reviewed and approved as suitable for a public hearing by: _____ Date: _____
COMMENTS:

**Form B**
**Submission Checklist for Site Plan Applications Requiring a Special Permit**

Applicant: _____ Contact Person: _____ Tel #: _____

Project Description and Address: _____

Date of Application, as stamped by the City Clerk _____ Note: this checklist must be included with the application for Site Plan Applications requiring a Special Permit, per Section 12.4.2.3 of the 1985 Woburn Zoning Ordinance, as amended. The applicant must submit a written explanation for any omitted checklist item(s). For additional information on each checklist item below, refer to the Sec. 12 –Site Plan Review of said ordinance.

| Information Required | Applicant's Initials | Staff Initials |
|---|---|---|
| 1. Name and address of the applicant. | | |
| 2. Statement certifying ownership of the premises involved, or evidence that the applicant has permission of the owner to make such application. | | |
| 3. Legal description of, and street address if there is one, of the location of the premises. | | |
| 4. Plans shall show the following: | | |
| a.) existing and proposed buildings; | | |
| b.) existing and proposed contour elevations in two foot increments; | | |
| c.)parking area and utilization; | | |
| d.) driveways and access to site; | | |
| e.) facilities for vehicular and pedestrian movement; | | |
| f.) drainage system and calculations; | | |
| g.) the location, capacity, and projected usage of facilities; | | |
| h.) landscaping, including trees to be retained and removed; | | |
| i.) exterior lighting; | | |
| j.) loading and unloading facilities; | | |
| k.) provision for refuse removal. | | |
| 5. Other information, as may be required: | | |
| a.) projected traffic volumes and impact; | | |
| b.) evidence as to the status of all permit applications to other local, state and federal agencies concerning the project; | | |
| c.) other information as may be necessary to determine compliance with the provisions of this ordinance. | | |
| d.) a list of abutters within 300 ft. from any property line, as certified by the Board of Assessors; | | |
| e.) tax liens on property. | | |

Applicant's signature: _____ Date: _____

Note: If any of the above items are missing or found deficient in any way, the City Council may choose to consider the submission incomplete, and as such, the application may be subject to denial.

FOR CITY CLERK USE:
Reviewed and approved as suitable for a public hearing by: _____ Date: _____
COMMENTS:

**Form C**
**Submission Checklist for Site Plan Applications Requiring Planning Board Approvals**

Applicant: _____ Contact Person: _____ Tel #: _____

Project Description and Address: _____

Date of Application, as stamped by the City Clerk _____ Note: this checklist must be included with the application for Site Plan Review, per Section 12.4.1.1 of the 1985 Woburn Zoning Ordinance, as amended. The applicant must submit a written explanation for any omitted checklist item(s). For additional information on any checklist item below, refer to the Sec. 12 – Site Plan Review of said ordinance.

| Information Required | Applicant's Initials | Staff Initials |
|---|---|---|
| 1. Name and address of the applicant. | | |
| 2. Statement certifying ownership of the premises involved, or evidence that the applicant has permission of the owner to make such application. | | |
| 3. Legal description of, and street address if there is one, of the location of the premises. | | |
| 4. Plans shall show the following: | | |
| a.) existing and proposed buildings; | | |
| b.) existing and proposed contour elevations in two foot increments; | | |
| c.)parking area and utilization; | | |
| d.) driveways and access to site; | | |
| e.) facilities for vehicular and pedestrian movement; | | |
| f.) drainage system and calculations; | | |
| g.) the location, capacity, and projected usage of facilities; | | |
| h.) landscaping, including trees to be retained and removed; | | |
| i.) exterior lighting; | | |
| j.) loading and unloading facilities; | | |
| k.) provision for refuse removal. | | |
| 5. Other information, as may be required: | | |
| a.) projected traffic volumes and impact; | | |
| b.) evidence as to the status of all permit applications to other local, state and federal agencies concerning the project; | | |
| c.) other information as may be necessary to determine compliance with the provisions of this ordinance. | | |
| d.) a list of abutters within 300 ft. from any property line, as certified by the Board of Assessors; | | |
| e.) tax liens on property. | | |

Applicant's signature: _____ Date: _____

Note: If any of the above items are missing or found deficient in any way, the Planning Board may choose to consider the submission incomplete, and as such, the plan may be subject to denial.

FOR PLANNING BOARD USE:
Reviewed and approved as suitable for a public hearing by: _____ Date: _____
COMMENTS:

[This page intentionally left blank.]

# SECTION 17

## NOTIFICATION OF ADOPTION OF CHANGES OF THE WOBURN ZONING ORDINANCES

1. A separate, conspicuous statement shall be included with property tax bills sent to all property owners in the City of Woburn, stating that notice of any proposed zoning ordinance change under M.G.L. Ch. 40A, Section 5 shall be mailed to any property owner who makes a one time request with the Woburn City Clerk's Office. (Added 12/16/97)

2. Upon filing of an Ordinance to amend the Zoning Map of the City of Woburn, the petitioner shall also prepare and file with the City Clerk a list of persons, certified by the Board of Assessors, listing all “parties in interest” as defined in Section 11 of Chapter 40A of the Massachusetts General Laws. The “property line” of the petitioner as used in Section 11 of Chapter 40A shall mean the entire boundary of the property that is subject of the Ordinance. The City Clerk shall give notice of the public hearing by first class mail, postage prepaid to all parties in interest as defined herein, not less than fourteen (14) days prior to the public hearing. (Added 6/15/2001)

[This page intentionally left blank.]

# SECTION 18

# DEVELOPMENT IMPACT ASSESSMENT AND MITIGATION

## 18.1 Purpose

The purposes of these provisions are to:

1. Assess proposed development and certain land uses to protect the health, safety and general welfare of the inhabitants of the City of Woburn;

2. Secure the safety, adequacy and reliability of Woburn's roads, utilities, services and facilities for pedestrians, residents, employees and motorists alike;

3. Identify the direct impacts a development or certain land uses will have upon the City's public facilities and services and ensure that the burden of those direct impacts upon public infrastructure are addressed and minimized, including the maintenance and upgrading of infrastructure in a responsible manner consistent with State and Municipal law and to the extent necessary to service public needs; and

4. Ensure that any mitigation required to address the development's impact(s) is/are proportionately borne by the development or land use that creates them via the imposition of reasonable mitigation requirements.

## 18.2 Scope of Study

The direct impacts that must be considered and assessed shall include, but not be limited to, impacts upon:

1. The public health, safety and general welfare of the residents of the City;
2. The surrounding natural environment;
3. Parks, playgrounds, and other recreational and open spaces;
4. Storm water management and drainage ways;
5. Roadways, streets and other public ways;
6. Motor vehicle traffic including public transit, passenger and truck traffic;
7. Non-motorized vehicular traffic, including pedestrian movement and safety and bicycle travel;
8. Public utilities, including water and sewer supplies and demand, gas, electric, telephone and the like;

9. Sanitary waste disposal; and
10. Trash.

## 18.3 Definitions

The following definitions shall apply to this Section 18.

IMPACT AREA: Area surrounding the proposed development that may be impacted including, but not be limited to, intersections and streets.

LEVEL OF SERVICE (LOS): A measure used to analyze the quality of traffic service by categorizing traffic flow and assigning quality levels of traffic based on performance measures including but not limited to speed, traffic volume and congestion. A project's Level of Service shall be determined according to criteria set forth by the Transportation Research Board of the National Research Council

SUBSTANTIAL ALTERATION OR IMPROVEMENT: An alteration or improvement of a structure or group of structures (a) totaling fifteen thousand (15,000) gross square feet or more in size which will either result in an increase in gross floor area of more than ten percent (10%) or which will require the addition of ten (10) or more parking spaces in order to comply with the Zoning Ordinance, or (b) which alteration or improvement the SPGA determines, by 2/3rd majority vote, may substantially impact existing conditions and therefore have a significant impact as set forth in Section 18.2 and Section 18.5. A determination of a Substantial Alteration or Improvement shall be based on the aggregate of all repairs, improvements, extensions or enlargements undertaken within a period of three (3) years prior to the submission of the application to which this section applies.

SPECIAL PERMIT GRANTING AUTHORITY ("SPGA"): The Special Permit Granting Authority (the "SPGA") as referenced in this section shall be the City Council for all uses designated in Section 5.1 with a "P" and the Planning Board for all uses designated in Section 5.1 with "PB".

## 18.4 Applicability

The requirements of this section shall apply to:

1. Any new construction;

2. Any Substantial Alteration or Improvement which requires a special permit;

3. Construction of 5,000 gross square feet or more of new floor area or improvement of 5,000 gross square feet or more of existing floor area in a B-N, B-D, S-1 or S-2 zoning district; or

4. Any new use established, or any increase in intensity of an existing use, which is listed in Section 5.1 Table of Uses under lines 3(a), 3(b), 3(c) 3(d), 4, 5, 15(b), 16(b), 17(b), 20, 20(a), 22(a), 22(b), 22(c), 23, 24, 28, 29, 30(a), 30(b), 37, 40(aa), 40(ab), 40(ba), 40(bb), 41, 41(a), 41(b), 42, 42(a), 43, 44, 45, 48, 49 and 53 of Section 5.1, Table of Uses, which results in:

    1. The construction of 15,000 square feet or more of new gross floor area;

    2. Any Substantial Alteration or Improvement as defined by Section 18.3 above;

    3. The conversion of 15,000 square feet or more of gross floor area from one use to another use; or

    4. The addition of ten (10) or more parking spaces in order to comply with Section 8 of the Zoning Ordinance.

**18.5 <u>Development Impact Statement (DIS)</u>**

A Special Permit or other application for a project meeting the thresholds in Section 18.4 above shall include a DIS which shall be prepared by personnel competent and qualified in their respective fields; at a minimum, the traffic and utility assessments must be prepared by qualified Massachusetts Registered Professional Engineers. The DIS shall include detailed information on and assessments of the subjects identified in Section 18.2 and set forth herein, including assessments of the clear and direct impacts the proposed project will have upon them. A DIS shall contain the following information:

a. Traffic Study: This assessment shall document existing traffic conditions in the vicinity of the proposed project, accurately describe the volume and effect of the projected traffic generated by the proposed project, and identify measures necessary and sufficient to mitigate any adverse impacts on existing traffic conditions.

    1. Determination of Scope: Prior to preparing the Traffic Study, the Applicant's Registered Professional Engineer is strongly encouraged to participate in a Scoping Meeting with the City Engineer to review the proposed scope of the Traffic Study including identification of the project's Impact Area to be studied. The City Engineer shall provide a written

statement to the SPGA regarding concurrence or disagreement with the proposed scope or the scope as otherwise provided in the Traffic Study, and the reasons for the City Engineer's opinion. Such written statement shall be provided to the SPGA and the Applicant either within thirty (30) days of the City Engineer's pre-application meeting with the Applicant's Registered Professional Engineer or, if no Scoping Meeting is held, within thirty (30) days of the City Engineer's receipt of the Traffic Study as part of the application filed with the City Clerk. Such written statement of concurrence or disagreement shall be either included with or subsequently attached to, as applicable, the Traffic Study submitted by the Applicant. The SPGA may require the Applicant to study and evaluate additional roadways and/or intersections to address any concerns identified by the City Engineer.

2. Contents: The Traffic Study shall contain the following:

   i. Existing traffic conditions: Measurement and assessment of average and daily peak hour vehicular, pedestrian and bicycle traffic volumes, average and peak speeds, sight distances, accident data and Levels of Service (LOS) of all intersections and streets within the project's Impact Area and including any intersection projected to be adversely affected by the project over the No Build condition. Such data shall be no more than twelve (12) months old at the time of application, unless other data are specifically approved by the SPGA with the recommendation(s) of the City Engineer. Automated Traffic Recorder (ATR) data must be for a minimum of 48 hours, not including Saturdays, Sundays, holidays, any day within a holiday week, or any day with any snowfall in the Boston basin geographical area. For each location counted, a plot of average directional count by hours for a 24 hour average weekday shall be provided.

      For projects near a State or Federal highway, turning movement counts must be sufficient to show that they include, at a minimum, the two highest peak hours among these possibilities: AM highway peak, mid-day highway peak, mid-afternoon highway peak, and PM highway peak. If the two highest generator peak hours do not overlap any part of the highway peak, substantiating data must be provided.

      With respect to accident history, a minimum of three (3) years of data shall be provided for each roadway and intersection impacted by the project. Written requests for accident reports shall be made to the Woburn Police Department for local roads and intersections and to MassDOT's District 4 Engineer for roads and intersections on State-owned highways.

ii. Projected traffic conditions: Projected traffic conditions for the design year of occupancy, including a statement of the design year of occupancy, estimated background traffic growth on an annual average basis, and impacts of other proposed developments that have been approved in whole or in part by the City of Woburn or an abutting town which will affect future traffic conditions.

iii. Projected impact of proposed project: Projected peak hour and daily traffic generated by the proposed project on the roads and ways in the project Impact Area, sight lines at the intersections of the proposed driveways and streets, existing and proposed traffic controls in the vicinity of the proposed project, and projected post-development traffic volumes and Levels of Service (LOS) of intersections and roads likely to be affected by the proposed project.

iv. Traffic mitigation measures: Specific measures to be undertaken by the Applicant in order to mitigate the impacts of the proposed project and to ensure that current traffic conditions and Levels of Service (LOS) are not adversely affected by the project. Also, the assessment shall consider both on site and off site mitigation measures, to include but not be limited to new traffic control signals, increase(s) in right of way capacity via widening roads, or other right of way or intersection improvements. Where the use of existing transit systems is proposed as mitigation, analysis of the impacts on capacity and performance of these services should be quantified and documented in this section. The proposed mitigation measures, if approved, shall be required to be completed prior to the issuance of a final certificate of occupancy for the project component. The assessment shall also consider how the proposed mitigation measures and future year performance degradation are fully mitigated to the equivalent No Build condition.

v. Trip Reduction Requirements: As a condition of its approval, the SPGA may require actions and programs by the owner and/or manager of a development to reduce the number of single occupant automobile trips made to a development, particularly during peak traffic hours. These requirements are geared toward an office environment, but may be applied to other uses to a certain extent. Such actions and programs may include:

1. providing a pass to employees for use on a public transportation system that service the development area;
2. use of carpools and vanpools;

3. scheduling of hours of operation, such as flex-time, staggered work hours, and spread scheduling that reduces trips during peak traffic hours;
4. preferential parking locations and arrangements for vehicles other than single occupant automobiles; and/or
5. restrictions on access to, or egress from, off-street parking areas during peak traffic hours.

b. Utility Impact Assessment: The Utility Impact Assessment shall document the capacity and condition of the existing public utility infrastructure in the vicinity of the proposed project, including but not limited to water and sewer services and storm water drainage systems. The assessment shall also accurately describe the additional demand, if any, upon said infrastructure items, generated by the proposed project, and identify measures necessary and sufficient to mitigate the impact caused by any such additional demand.

1. Determination of Scope: Prior to preparing the utility impact assessment, the Applicant's Professional Engineer is strongly encouraged to meet with the City Engineer to review the proposed scope of the utility impact assessment, including the identification of the project's Impact Area to be studied, which shall include all water and sewer utilities likely to be affected by the proposed project. The City Engineer shall provide a written recommendation to the SPGA regarding the proposed scope or the scope as otherwise provided in the utility impact assessment, and the reason(s) therefor. Such written recommendation shall be provided to the Applicant within thirty (30) days of the City Engineer's meeting with the Applicant's Professional Engineer, or, if no scoping meeting is held, within thirty (30) days of the City Engineer's receipt of the utility impact assessment as part of the application filed with the City Clerk. Such written recommendation shall either be included with or subsequently attached to, as applicable, the Utility Impact Assessment submitted by the Applicant. The SPGA may require the Applicant to study and evaluate additional utility infrastructure impacts, including but not limited to water, sewer and storm water drainage, to address any concerns identified by the City Engineer.

2. Contents: The Utility Impact Assessment shall evaluate:

i. Existing condition and capacity: Identification of the size, type, condition and overall remaining capacity of the existing utility infrastructure. The assessment shall include examination of available City plans within the immediate Project vicinity, completion of hydrant pressure testing of the City water main(s) serving the facility and,

where necessary, video camera inspections of existing sewer service connections to be re-used. The assessment shall also include an up-to-date inventory of City-owned utility infrastructure impacted by the Project; for sanitary sewer and storm drainage systems provide estimates of the existing capacity and percentage of capacity presently utilized as well as excess capacity if any;

ii. Projected conditions: Projected usage shall be provided, including estimated water usage, and sanitary and storm water outflows; together with the impacts, as available, of usage caused by other developments already approved by the City.

iii. Utility mitigation measures: Specific measures to be implemented by the Applicant to mitigate the impacts of the proposed project on the public water and sewer infrastructure, including increasing the capacity by replacing and/or enlarging existing lines; inflow and infiltration improvements or payments; on-site retention or detention tanks; or other on-site or off-site measures. The proposed mitigation measures, if approved by the SPGA, shall be solely related to the proposed development and completed prior to the issuance of a final certificate of occupancy for the Project component.

c. Other Public Facilities Impact Assessments: This section of the DIS shall include detailed information and analyses about the development's projected impact(s), both on-site and in the impact area, on all of the following:

1. Parking, including existing and proposed on-site motor vehicle and bicycle parking layout(s)/accommodations and on-street/off-site (where applicable) motor vehicle and bicycle accommodations to evidence proposed facilities are sufficient to serve the project;

2. Transit Services, including locations of bus, train and transit stops, shelters, stations and routes within the project Impact Area as well as private shuttle bus service routes, school bus stops, etc. within five hundred (500) feet of the project site. Information shall be provided relative to daily AM and PM schedules (including Saturdays for residential or retail projects) for stops/stations within five hundred (500) feet of the project site including a summary of transit schedules and headways for each service.

3. Environmental conditions and impacts, including a summary of wetland resource areas and buffer zones, identified and potential vernal pools, groundwater protection zones, flood hazard areas and floodplains, steep

slopes and areas of known soil/groundwater contamination. If the project is subject to a Notice of Intent filing with the Conservation Commission, the Applicant shall provide a copy of the submission to the SPGA to fulfill the provisions of this Section.

4. Parks, playgrounds, and other recreational and open spaces, including all public and privately-owned open space parcels and trails, public parks and playgrounds and athletic facilities such as pools, running tracks, walking paths and ballfields within five hundred (500) feet of the project site.

5. Pedestrian movement and safety, including existing levels of pedestrian traffic within five hundred (500) feet of the project site, five (5) year projections of volumes of pedestrian traffic, the location and condition of existing sidewalks and other pedestrian ways including whether or not compliant with ADA requirements, and provision of lighting and other safety measures in areas where pedestrian traffic exists or is expected as a result of the development.

6. Trash and recycling. If the project will request public trash service, include estimated tonnage of refuse and recycling to be generated by the development on a weekly basis and any private or public provision(s) for collection of trash and recycling.

d. Fiscal Impact Assessment

The purpose of the Fiscal Impact Assessment is to evaluate the fiscal and economic impacts of the proposed development on the City in accordance with the following:

1. Projections of costs arising from increased demand for public services (such as schools, police and fire (including ambulance service), trash and waste disposal; administrative and inspection services);
2. Projections of benefits from increased tax revenues, employment (construction and permanent), and value of public infrastructure to be provided;
3. Projections of the impacts of the proposed development on the values of abutting properties;
4. Consistency or conflicts with the City's Master Plan; and
5. Five-year projection of increased City revenues versus costs resulting from the proposed development.

## 18.6 Report by City Engineer

The City Engineer shall be responsible for preparing a written report to the SPGA after consulting with the Superintendent of Public Works and all other relevant departments regarding the adequacy and accuracy of the scope, data, findings, and proposed mitigation measures presented in the Development Impact Statement.

## 18.7 Peer Review

The SPGA may require peer review of some or all of the contents of the DIS, at the Applicant's expense as it deems appropriate.

## 18.8 Performance and Completion of Mitigation Measures

1. No building permit shall be issued to an Applicant until surety has been established in a sum sufficient to ensure completion of any said mitigation measures, in the form of a performance bond, irrevocable letter of credit, or escrow agreement and such is filed with the City Treasurer The sum of said surety shall be established by the SPGA after consulting with the City Engineer, who shall be responsible for review and approval of the costs of construction/completing mitigation measures and including a minimum of an additional twelve percent (12%) to the estimate, to account for inflation and as a contingency against unexpected field conditions. Such cost estimate shall be prepared by the Applicant's professional engineer or licensed architect. The City Solicitor shall approve the surety as to proper form and content prior to its acceptance by the SPGA.

   The Applicant is expected to complete/implement any and all required mitigation construction/improvements as conditions of any Special Permit or plan approval prior to the issuance of a final occupancy permit for the project. In the event that all required mitigation construction/improvements are not completed by the time a final occupancy permit is issued for the project, then the SPGA may revoke the Special Permit or plan approval.

   The SPGA may, by majority vote, periodically reduce the amount of the bond held as surety to guarantee completion of mitigation measures. No bond reduction or final release of remaining bond monies shall be approved unless the SPGA has received certification from the City Engineer and/or any other appropriate municipal department that all required mitigation work has been satisfactorily completed.



2. Payments in Lieu of Performing Mitigation Measures

a. It is the preference of the City that the developer/Applicant complete all mitigation measures, if any. Occasionally the option of a payment in lieu of performance may be appropriate in certain circumstances (e.g. contributions, which to the extent not voluntary and with the exception of the 12% interest and contingency specified above cannot exceed the cost of any direct and proportionate impact of the proposed project, toward a larger-scale infrastructure project being planned by others). In those circumstances the SPGA may by 2/3rds majority vote authorize the Applicant to make a payment in lieu of performing all or part of mitigation measure(s) which have been made a condition of a Special Permit or plan approval.

b. Any such payment shall be equivalent to the amount calculated by the City Engineer in accordance with paragraph 18.8.1 above and shall be placed into an account dedicated to the specific purpose identified as a condition of the approval. The payment shall be used for no other purpose. In calculating any such payment, the Applicant shall not be credited the amount of the contribution required under Title 13 of the City of Woburn Municipal Code or any contribution to roadway, water or sewer improvements required as a result of the environmental review process of the state or federal government.

c. At least once each year from the date the funds are deposited with the city, the City Auditor shall certify in writing to the City Council and the SPGA, if the City Council is not the SPGA, the amount of funds remaining unencumbered in the account.

d. In the case when such payment in lieu of performance is accepted and if the funds have not been encumbered by the City of Woburn within two years of the issuance of an occupancy permit, the City Council upon its own initiative or the request of the Applicant or SPGA shall hold a hearing to determine why the funds have not been spent or encumbered. At said hearing, the City Council may extend for a period of no more than two years the time frame to encumber such payment in lieu of performance. If payment in lieu of performance is not encumbered in the aforementioned time frame, the payment shall be returned to the developer.

e. Any money in the fund shall be expended only by a majority vote of the entire membership of the City Council, with the approval of the Mayor, and shall be appropriated only for the purpose of performing and/or addressing the mitigation set forth in the Development Impact Statement.



3. If the Applicant has failed to comply with all the conditions of the Special

Permit or plan approval, and/or has not completed required mitigation work before the issuance of a temporary or final occupancy permit, the City shall complete the mitigation measures as much as is practical with funds obtained through the exercise of the surety posted in accordance with paragraph f.1 above

4. If a proposed project generates a significant number of additional residents and/or employees and such participation is warranted and required by the SPGA, the Applicant shall participate in the regional or local transportation management association (TMA) and implement a transportation demand management program that includes the assignment of an Employee/Resident Transportation Coordinator to work with the TMA, residents and employees to encourage ridesharing and the use of public transportation.

5. Waivers - The SPGA, by a 2/3rds majority vote of the full SPGA, after receiving the Development Impact Statement and the report of the City Engineer, may waive all or part of the mitigation requirements of this provision. The SPGA, in approving a waiver, shall make a specific finding, in writing, that the granting of a waiver will not create conditions which are substantially more detrimental to the neighborhood in which the site is located, than if the waiver were not granted. As the basis for its decision, the SPGA shall consider other positive impacts of the project upon the project Impact Area not measured by the Development Impact Statement, such as, but not limited to, the substantial remediation of an environmentally contaminated site, the creation of needed affordable housing and transportation demand management measures.

**18.9 <u>Severability</u>**

The invalidity of one or more provisions or clauses of this section shall not invalidate or impair the section as a whole or any other part hereof.

(added 10/04/1999; amended 8/7/2001; amended 7/23/2004; amended 11/22/2017; amended 7/30/2019)

**********

[This page intentionally left blank.]

# SECTION 19

## Reserved

(Traffic - added 2/14/2001; deleted 7/30/2019)

**********

[This page intentionally left blank.]

# SECTION 20

# WOBURN LOOP BIKEWAY/GREENWAY OVERLAY DISTRICT

## 1. Purpose of District

a. To promote the health, safety and general welfare of the community by encouraging the redevelopment of abandoned, underutilized, and/or obsolete commercial and industrial sites to residential use, particularly those sites which can be designated as brownfields, by virtue of a release or contamination of the soils by oil or hazardous materials.

b. To promote appropriate land use development adjacent to, and in the general area of the proposed Woburn Loop Bikeway/Greenway Project, where residential and non-residential uses are historically in close proximity.

## 2. Scope of Authority

The Woburn Loop Bikeway/Greenway Overlay District is an overlay district superimposed on portions of the existing General Industrial (I-G) Zoning District, in certain locations within the City. The overlay district shall permit residential land uses which shall be in addition to the land uses allowed in the underlying I-G District. Conditions and requirements of the Woburn Loop Bikeway/Greenway Overlay District shall apply only to those additional uses permitted for the Woburn Loop Bikeway/Greenway Overlay District, and shall not apply to uses permitted in the underlying I-G District. Special Permits under this section shall be granted in accordance with Section 11 of this Ordinance. The Special Permit Granting Authority (SPGA) for the additional residential uses allowed under this Section shall be the Planning Board.

## 3. Definitions

WOBURN LOOP BIKEWAY/GREENWAY OVERLAY DISTRICT: A zoning district which is superimposed over certain parcels within the General Industrial (I-G) Zoning District, adjacent to or in the vicinity of the Woburn Loop Bikeway Greenway Project, within which certain residential uses are allowed which are supplementary to the uses allowed in the I-G District.

WOBURN LOOP BIKEWAY/GREENWAY PROJECT: The alternative transportation corridor construction project which is proposed for the former railroad right-of-way known as the Woburn Loop, which extends from Cross Street at the Winchester town limit line, to a point just below High Street.

## 4. Allowed Uses

The following residential uses shall be allowed in the Woburn Loop Bikeway/Greenway Overlay District:

a. Detached Single Family Dwelling: A detached single family dwelling, shown as Section 5.1.1 of the Table of Use Regulations, is allowed by right in the Woburn Loop Bikeway/Greenway Overlay District, provided all requirements for a detached single family dwelling in the Residence 1 Zoning District (R-1) are met.

b. New Construction of a Two Family Dwelling: The new construction of a two family dwelling, shown as Section 5.1.2b of the Table of Use Regulations, is allowed by right in the Woburn Loop Bikeway/Greenway Overlay District, provided all requirements for a new two family dwelling in the Residence 2 Zoning District (R-2) are met.

c. Townhouse Dwellings: Townhouses dwellings as defined by Section 2 of this Ordinance, and shown as Section 5.1.3a of the Table of Use Regulations, are allowed by Special Permit in the Woburn Loop Bikeway/Greenway Overlay District, provided all conditions set forth below, and all conditions set forth in Section 12 of the Ordinance, are met.

d. Congregate Elderly Apartments: as defined by Section 2 of this Ordinance, and shown as Section 5.1.3b of the Table of Use Regulations, are allowed by Special Permit in the Woburn Loop Bikeway/Greenway Overlay District, provided all conditions set forth in Section 12 of the Ordinance are met. Dimensional requirements shall be those for Apartments in the S-1 District, as shown in Section 6.1, Table of Dimensional regulations.

## 5. Townhouse Requirements

a. Minimum Lot Size: the minimum lot size for the construction of Townhouse dwellings shall be 22,000 square feet.

b. Density: the maximum allowed density for townhouse dwelling under this section shall be 3,600 square feet of gross lot area per dwelling unit.

c. Maximum Height: the maximum height of townhouse dwellings under this section shall be 2 and on-half stories, and thirty (35) feet.

d. Maximum Attached Units: the maximum number of townhouse dwelling units which may be attached in a single structure under this section shall be five units. Each townhouse dwelling unit shall have a separate entry.

e. Open Space: the minimum percentage of landscaped usable open space shall be 50 percent.

f. Setbacks: townhouse structures shall be separated from each other, and front yard, side yard, and rear yard setbacks shall be a minimum distance of 30 feet.

g. Parking: each townhouse dwelling unit shall have its own off-street parking or garage. Two parking spaces per unit shall be provided. All parking and circulation roadways shall meet the design and dimensional requirements of Section 8 of this Ordinance.

h. Building Ground Coverage: the maximum building ground coverage under this section shall be 20 percent, including garage parking.

i. Frontage: the minimum street frontage for a townhouse development under this section shall be 100 feet.

**6. <u>Development Impact Mitigation</u>**

All residential uses developed in the Woburn Loop Bikeway/Greenway Overlay District under this section shall meet the requirements of Section 18 of this Ordinance. (amended 7/30/2019)

(Added 7/28/2003)

**********

[This page intentionally left blank.]

# SECTION 21

# MISHAWUM STATION TRANSIT ORIENTED DEVELOPMENT OVERLAY DISTRICT

## 1. Purpose of District

a. To promote the health, safety and general welfare of the community by encouraging the development and/or redevelopment of the MBTA Mishawum Commuter Rail Station Area.

b. To encourage mixed residential and office uses in order to increase opportunities for development of housing in transit served areas of the community.

c. To encourage transit-orientated development that increases pedestrian activity around transit stations.

d. To increase the customer base for both transit facilities and local businesses.

## 2. Scope of Authority

The Mishawum Station Transit Oriented Development Overlay District is an overlay district superimposed on the existing Office Park (O-P) Zoning District, in certain locations within the City. The overlay district shall permit residential land uses which shall be in addition to the land uses allowed in the underlying O-P District. Conditions and requirements of the Mishawum Station transit Oriented Development Overlay District shall apply only to those additional uses permitted for the Mishawum Station Transit Oriented Development Overlay District, and shall not apply to uses permitted in the underlying O-P District. Residential uses shall be allowed as-of-right within the overlay district. Ten (10%) percent of residential units developed within the overlay shall be affordable units.

## 3. Definitions

MISHAWUM STATION TRANSIT ORIENTED DEVELOPMENT OVERLAY DISTRICT: A zoning district which is superimposed over certain parcels within the Office Park (O-P) Zoning District, adjacent to or in the vicinity of the MBTA Mishawum Commuter Rail Station Area, within which certain residential uses are allowed which are supplementary to the uses allowed in the O-P District.

MBTA MISHAWUM COMMUTER RAIL STATION AREA: The Area is shown on Assessor's Map 25, Block 9, Parcel 5; Map 25, Block 9, Parcel 6; Map 25, Block 8, Parcel 3; Map 25, Block 8, Parcel 2 and Map 25, Block 8, Parcel 1 and as further shown on a plan entitled "Mishawum Station, Woburn, MA, Prepared by: Allen & Major Associates, Inc. dated May 4, 2006" on file with the City Clerk's Office.

**4. <u>Allowed Uses</u>**

a. In addition to the uses allowed in the underlying O-P District, the following residential uses shall be allowed by right in the Mishawum Station Transit Oriented Development Overlay District either as mixed-use projects or as only multifamily developments:

   i. Townhouse Dwellings: Townhouse dwellings as defined by Section 2 of this Ordinance, and shown as Section 5.1.3c of the Table of Use Regulations, are allowed by right in the Mishawum Station Transit Oriented Development Overlay District, provided all conditions set forth below are met.

   ii. Garden Apartments: as defined by Section 2 of this Ordinance, and shown as Section 5.1.3d of the Table of Use Regulations, are allowed by right in the Mishawum Station Transit Oriented Development Overlay District, provided all conditions set forth below are met.

   iii. Elevator Apartments: as defined by Section 2 of this Ordinance, and shown as Section 5.1.4 of the Table of Use Regulations, are allowed by right in the Mishawum Station Transit Oriented Development Overlay District, provided all conditions set forth below are met.

   In cases where Site Plan Review is required by Section twelve, the City Council shall be the Site Plan Review authority, and Section 12.3.1 shall not apply to the Mishawum Station Transit Oriented Development Overlay District.

**5. <u>Requirements for Residential Uses allowed by right in the Mishawum Station Transit Oriented Development Overlay District</u>:**

a. Minimum Lot Size: the minimum lot size shall be 40,000 square feet.

b. Density: the maximum allowed density under this section shall be 1,000 square feet of gross lot area per dwelling unit.

c. Maximum Height: the maximum height shall be seven (7) stories and eighty (80) feet, and Section 6.1.8 shall not apply to the Mishawum Station Transit Oriented Development Overlay District.

d. Open Space: the minimum percentage of landscaped usable open space shall be twenty (20%) percent. For the purposes hereof, landscaped areas located on top of any underground parking structure shall be included in the calculation of "Landscaped useable open space."

e. Setbacks: front yard setback shall be a minimum of twenty-five (25) feet, side yard and rear yard setbacks shall be a minimum of 25 feet. Setback requirements shall not apply to any underground structure.

f. Parking: Parking shall be provided as set forth in Section 8.2. For mixed-use projects, parking requirements may be varied by special permit as provided under Section 8.2. All parking and circulation driveways shall meet the design and dimensional requirements of Section 8 of this Ordinance.

g. Building Ground Coverage: the maximum building ground coverage under this section shall be thirty (30%) percent, excluding underground garage parking.

h. Frontage: the minimum street frontage under this section shall be one hundred (100) feet.

i. Lot Width: the minimum lot width under this section shall be forty (40) feet.

j. Floor Area Ratio: the maximum floor area ratio under this section shall be 1.5.

**6. <u>Development Impact Mitigation</u>**

All residential uses developed in the Mishawum Station Transit Oriented Development Overlay District under this section shall meet the requirements of Section 18 of this Ordinance.

(Added 8/18/2006)

**********

[This page intentionally left blank.]

# SECTION 22

# INTERGENERATIONAL OVERLAY DISTRICT (IOD) DISTRICT

A. Purpose and Objectives

1. To provide housing options to meet the needs of households at different stages of life.
2. To promote high quality design and minimize negative impacts on the surrounding area and the Woburn Public School System..
3. To provide public access to Middlesex Canal.
4. To contribute to the Main Street beautification project from the Route 38 interchange to the Wilmington town line.

B. Application

1. The Intergenerational Overlay (District (IOD) is hereby established as an overlay district. The IOD shall only be applied to properties zoned R-1 that have frontage along Route 38 ( Main Street) of at least 125 feet and are north of Interstate 95 (I-95) and Route 38 interchange; and are within 2,250 feet northerly of the centerline right of way of said I-95 at the Route 38 interchange. Inclusion of any property into an IOD shall also require a zoning map change consistent with the rules and regulations of the Woburn Zoning Ordinance.

2. The provisions of the IOD shall only apply to projects using IOD criteria. Any building, structure or use of land that is not part of an IOD development proposal shall maintain the rights and privileges of the underlying district without modification by the IOD.

C. Associated Criteria

1. All IOD proposals shall be subject to Site Plan Review Section 12a, as applicable.
2. All IOD proposals shall be subject to Section 18, Development Impact Mitigation as applicable.
3. All IOD proposals except those uses in Section 22(E)(1)(d) and Section 22(E)(1)(e) shall be subject to Section 11.11 Affordable Housing Requirements, as applicable.

D. By Right Uses

1. None

E. Special Permit Uses

1. A special permit shall be required from the Woburn City Council for the following uses.

   a. Senior Housing exclusively for seniors 62 or over.
   b. Congregate Elderly Apartments as defined in Section 2. Definitions.
   c. Assisted Living residences.
   d. Nursing homes or Alzheimer care residences.
   e. Continuing Care Facility: A combination of the uses noted in items b through d above.
   f. Multi-family housing as defined below shall only be allowed in an IOD if on the same lot or an adjacent lot any one or combination of uses noted in items c through e above are located. Except for Multi-family condominium units, the number of any other type of multi-family units shall not exceed .5 times the number of units in items c through e above and said units c through e used for this calculation shall only be used one time to meet said requirement. The number of Multi-family condominium units shall not exceed three times the number of units in items c through e above and said units c through e used for this calculation shall only be used one time to meet said requirement.
   g. Accessory offices, clubhouses, personal services, and recreation amenities consistent and with the uses noted above.
   h. A deeded easement and right of way for frontage will be required for any special permit granted hereunder.

2. For purposes of this Section 22, Multi-family housing shall be defined as a building or buildings designed or intended or used as the home or residence of three or more families, each in a separate dwelling unit, living independently of each other and which may have a common right in halls, stairways, and outside recreational and parking areas with the number of families in residence not exceeding the number of dwelling units provided.

F. Dimensional and Density Regulations

1. Lot area, frontage and yards.

Senior Housing, Congregate Elderly Apartments, Continuing Care Facility, Multi-family housing, and the Accessory offices, clubhouses, personal services, and recreation amenities consistent and with theses uses shall meet the following dimensional controls:

Minimum lot area: 5 acres
Minimum Lot frontage: 200 feet
Minimum Front yard setback: 60 feet
Minimum side yard setback: 40 feet
Minimum rear yard Setback: 30 feet.

Assisted Living residences, Nursing homes, Alzheimer care residences, and the Accessory offices, clubhouses, personal services, and recreation amenities consistent and with theses uses shall meet the following dimensional controls:

Minimum lot area: 1 acre
Minimum Lot frontage: 125 feet
Minimum Front yard setback: 60 feet
Minimum side yard setback: 25 feet
Minimum rear yard Setback: 30 feet.

2. Lot coverage and Landscaped Usable Open Space

Maximum building coverage: 40%
Minimum landscaped usable open space: 40%
Maximum Lot Coverage: 60%

3. Building Height and Intensity of Use

a. Maximum height for Senior Housing and Multi-Family housing developments in the IOD shall be 3 stories and 42 feet. The maximum number of residential units shall be not more than 1 bedroom or per 1,000 square feet of gross lot area not including the

area assigned to rivers or canals that may be on the lot. Further, in no instance shall there be more than 100 units in any Senior Housing or Multi-Family housing development in the IOD.

b. Maximum height for Congregate Elderly Apartments; Assisted Living Residences; Nursing Homes; Alzheimer care residences; and Continuing Care Facilities shall be 3 stories and 42 feet in the IOD. A peaked roof shall be required unless waived during the site plan review process; however, the maximum exterior eave height of any portion of any building shall not exceed 36 feet at any one point. The maximum number of residential units shall be not more than 1 bedroom per 1,000 square feet of gross lot area not including the area assigned to rivers or canals that may be on the lot; a nursing home room/bed or Alzheimer room/bed shall be construed to be a bedroom. Further, in no instance shall there be more than 150 units in any of the above uses in the IOD.

c. There shall be a maximum of thirty-three (33) Alzheimer care units and a maximum of thirty-five (35) Alzheimer care beds and under no condition shall the number of Alzheimer care units exceed thirty-three (33) and thirty-five (35) Alzheimer care beds.

4. More than One Building on a Lot

a. All IOD development may contain more than one principal building on a lot.

G. Off –Street Parking Requirements

1. At a minimum, off street parking spaces shall be provided as follows.

a. Congregate Elderly Apartments: 1.5 spaces per unit and 1 visitor space per 10 units.
b. Assisted Living residences: 0.50 parking spaces per unit and 1 visitor space per 10 units.
c. Nursing Homes, Alzheimer care residences: 0.35 spaces per unit and 1 visitor space per every 10 residences.
d. Continuing Care Facilities: A proportional combination of the parking requirements noted in items a through c above.
e. Senior Housing, Multi-family housing: 1 visitor space for every 10 units; 1.5 spaces per studio or one bedroom unit, 2 spaces for every two bedroom unit and 2.5 spaces for three bedroom units or greater.

H. Design Standards

1. All development in an IOD shall comply with the following standards for streetscape design in addition to criteria that may be required as part of site plan review.

   a. As approved and required as part of site plan review process trees shall be planted along all public rights of way. Trees shall be planted at intervals of not less than 40 feet, unless plantings are precluded by utilities or points of access. Tree species shall be selected that require minimal maintenance and are of native origin.

   b. Pedestrian amenities such as benches, kiosks, trash receptacles shall be provided along public sidewalks as approved as part of the site plan review process.

   c. Access to historic walkways, trails, canal walks, and other similar public open spaces and amenities that abut the proposed development shall be provided to the general public.

   d. All new utilities shall be placed underground as is practical, as determined during the site plan review process.

2. Exception to the area and landscaping requirements in Section 8.6.2 for all IOD developments may be granted by Special Permit if the City Council finds the amount, placement and type of landscaping proposed will be equal or superior in visual appearance than if the requirements were strictly adhered to.

(added 9/4/2008; amended 10/5/2010)

[This page intentionally left blank]

# SECTION 23

# COMMERCE WAY CORRIDOR OVERLAY DISTRICT (CWCOD)

1. **Purpose of District**

The CWCOD is hereby established to permit mixed use development, office, research, commercial, retail and accessory uses as described herein. Specifically, it is the purpose of the CWCOD;

a. To promote the health, safety and general welfare of the community by encouraging the redevelopment of underutilized and / or obsolete commercial and industrial sites to allow for uses such as mixed use, office, research, retail and multi-family uses.

b. To promote CWCOD related development in an orderly and sustainable fashion, such that no future development proposal will be precluded from utilizing the CWCOD in a manner allowed by this section.

c. To encourage the development of mixed residential, retail, office and research uses in order to increase the opportunity for development in transit served areas of the community.

d. To encourage the development of comprehensive projects of appropriate scale in an area that provides proximate access to major highway and public transportation.

e. To provide a desirable mix of land uses, including both residential and commercial development that will serve the community and regional interest in housing, employment, and net positive tax revenue.

f. To promote creative, efficient and appropriate solutions to the development of complex and / or environmentally challenged sites.

2. **Establishment and Applicability**

**2.1 Establishment**

The Commerce Way Corridor Overlay District (CWCOD) is established as an overlay district superimposed on portions of the existing Industrial Park (I-P), Industrial Park 2 (I-P2), and the Interstate Business (B-1) Zoning District as shown on the City of Woburn zoning map as CWCOD dated

December 23, 2009 and as may be amended from time to time. (amended 12/23/2009)

### 2.2 Applicability

The CWCOD shall permit mixed use development, office, research, commercial, retail, and multi-family uses and accessory uses as described in Section 5.0 herein.

The CWCOD shall not affect the zoning regulations associated with the underlying zoning district if property owners decide not to employ the CWCOD. However, if property owners elect to use the CWCOD they shall be subject to all CWCOD requirements and shall not be permitted to revert to the underlying district regulations. Further, only uses allowed in the CWCOD by right, by special permit or as an allowed accessory use shall be permitted (see Section 5.0 herein), all other uses shall be deemed as prohibited.

## 3. Project Review Procedures

### 3.1 Concept Plan Review

All projects proposed for initial construction shall be required to submit a Concept Plan to the CWCOD Concept Plan Review Committee (Committee). The Committee shall review the Concept Plan to insure that it is consistent with sub-Sections 3.5 and 3.6 below, as applicable.

### 3.2 Establishment and Authority: The Concept Plan Review Committee

A Concept Plan Review Committee shall be established by the Woburn City Council and shall be comprised of three members of the City Council and two members of the Planning Board. The primary role of the Concept Plan Review Committee (Committee) shall be to review all CWCOD proposals and provide a written report to both the Planning Board and City Council regarding their findings. (amended 1/19/2012)

### 3.3 Report

Upon written receipt of the Concept Plan, the Committee shall have up to 90 days to prepare its written report to the City Council, Planning Board and applicant. An additional 90 days may be permitted upon mutual consent of the applicant and the Committee. Such extension shall be in writing and shall be filed in the office of the City Clerk.

### 3.4 Effect

The written report shall be advisory in nature. The issuance of a written report or the failure of the Committee to issue a written report shall not prevent the submittal of an application for site plan approval and/or special permit to the City Council.

### 3.5 Minimum Concept Plan Review Criteria.

The report to the City Council, Planning Board and applicant shall contain, at a minimum, a discussion of the following issues:

a. Is the project consistent with the purposes of the CWCOD as set forth in Section 1 herein?

b. Does the proposed project allow for the abutting parcels to be developed consistent with the objectives of the CWCOD set forth in Section 1 herein?

c. Does the proposed project enhance the regional roadway and transit transportation features within and abutting the CWCOD? Specifically, does the proposed project assist in the improvement of Commerce Way or other key transportation features identified by the Concept Plan Review Committee?

d. Does the proposed development, create visual and or operational harm to abutting residential uses; if so what mitigation is proposed?

e. How does the proposed project impact roadway or infrastructure services in the CWCOD; and do improvements by either the City of Woburn or the developer or from both parties need to be made in order to insure safe and efficient operation of the proposed project?

f. If the proposed project has a residential component, how does it address the need to provide at least 10% of the total units as affordable housing consistent with Chapter 11of the Woburn Zoning Ordinance?

### 3.6 Concept Plan Submission Criteria

An application for a CWCOD Concept Plan Review shall be accompanied by the following materials:

a. Name address, and telephone number of applicant.

b. Statement certifying ownership of the premises involved, or evidence that the applicant has permission of the owner to make such application.

c. Legal description of, and street address, if there is one, of the location of the premises.

d. Narrative summarizing the purposes and intent of the Project, the planned uses, and the development phasing strategy. A graphic and or tabular presentation, as is appropriate, of items e through q below on a combined site plan or individual elements as appropriate.

e. A preliminary site design executed to a level of specificity and scale such that all buildings are clearly shown with their intended orientation to rights of way; an indication of the intended uses for each building (including graphic and / or tabular information) indicating the limitations of total building area, stories, height, floor to area ratios, general building elevations, paved or natural surfaces, open spaces and the total amount of open space area provided.

f. A preliminary plan indicating the proposed internal and external street pattern, approximate locations and dimensions of rights of way, on site vehicular access and connections, parking lot and garage locations with preliminary parking totals.

g. A preliminary plan indicating all intended pedestrian and bicycle circulation elements and amenities.

h. A plan indicating preliminary landscaping and screening plans with examples of plant species, fencing, walls and retaining walls to be used.

i. Identification of nearby or abutting residential properties and any known visual or operational impacts to said properties.

j. A plan indicating the location of all known utilities, public or private easements, cell towers, or any public or private infrastructure component on the premises, on the abutting properties, or within the CWCOD that may be germane to the

successful development of the Project. An indication, if appropriate, of the infrastructure improvements proposed by the applicant.

k. A preliminary drainage and storm water plan for the premises likely to comply with DEP's Stormwater Management regulations and applicable City ordinances with consideration given to adjoining properties.

l. A preliminary presentation of any energy efficiency and / or environmentally sensitive technologies intended to be employed.

m. Identification of major sign locations and scale.

n. A preliminary traffic analysis that includes estimated average daily traffic, peak hour volumes, identification of key intersections that may be impacted, traffic calming or mitigation proposals, an indication of improvements that may need to be made the existing roadway circulation system of the CWCOD to insure safe roadway conditions after Project development, including improvements to the existing public roadway system that the applicant intends to provide.

o. A preliminary analysis of the impacts to the existing public infrastructure within or supporting the CWCOD that will result from the development of the proposed Project.

p. For multifamily development, information and graphic presentation regarding the preliminary estimate of the total number of units, percentage of affordable units, unit by bedroom type, floor to area ratio, the location of open space and parking, preliminary building elevations, the relationship to transit facilities, and all other items listed above that the Committee deems appropriate.

q. Other information that the Committee may deem appropriate to insure a complete concept plan review.

4. **Application for Site Plan Approval or Special Permit; Initial Project Construction**

Upon completion of the Concept Plan Review Process, the applicant may submit to the City Council an application for the initial construction of the project, in accordance with the following:

### 4.1 Application for Site Plan Approval

When a project contains only uses available by right, an application for site plan approval consistent with Sections 11.3 (Procedures for Special Permits) and Section 12 (Site Plan Review) shall be submitted to the City Council.

### 4.2 Application for Special Permit(s)

When a project contains one or more uses or conditions that require a special permit from the City Council, an application for site plan approval together with an application for a special permit shall be submitted to the City Council which shall serve as the special permit granting authority. The application shall be consistent with the procedures and requirements of Section 11 (Special Permits and Variances) and Section 12 (Site Plan Review) as applicable. Further, when a project requires more than one special permit from the City Council all applications shall be heard simultaneously.

### 4.3 Required Findings

In their deliberations as either the site plan review or special permit authority the Woburn City Council shall be required at public hearings to address all findings of the Committee's written report relative to the submitted Concept Plan in addition to other statutory requirements relative to site plan review and special permit review as provided by this Ordinance.

### 4.4 Lapse of Concept Plan

The applicant shall have up to one year from the date of submission of the concept plan to submit an application under the CWCOD with or without a special permit as may be appropriate; after said period the applicant shall be required to re-submit the Concept Plan for Concept Plan Review.

## 5. <u>Permitted Uses</u>

In the CWCOD uses shall be permitted as of right subject to site plan approval, by special permit, and as accessory uses**.**

### 5.1 Uses by Right

The initial construction of the following uses shall be allowed as of right in any Project up to a Floor to Area Ratio (FAR) of 1.0, and subject to site

plan approval and any additional restrictions on use or intensity of use as noted below. For any initial construction above a FAR of 1.0, all uses listed in this section (5.1) shall require a special permit. Parking lots or parking structures above or below grade shall not be calculated as part of the FAR. Further, multiple uses may be contained within a single building or structure constituting a Project.

a. Mixed Use Retail. (Permitted as of right if the total gross building area of the initial construction project exceeds 150,000 sf.)

b. Child Care Center. (Allowed as either a primary use or as an accessory use).

c. Sports or Fitness Clubs. (Except that all outdoor facilities or activities shall require a special permit).

d. Private Membership Clubs.

e. Hotel.

f. Hotel Complex. (Permitted by right if the hotel component is at least 50% of an initial construction project having a total building area of more than 150,000 square feet.

g. Supermarkets. (Except that supermarkets over 50,000 gross square feet, not including basements, shall require a special permit).

h. Retail. (Allowed by right if the initial construction project includes more than 150,000 sf. of combined retail, personal service, and/ or restaurant use in any combination; for initial construction projects with less than 150,000 gross sf. of combined retail, supermarket, personal service, and/or restaurant use; retail use shall require a special permit. Further, no individual retail establishment except for a supermarket in the CWCOD shall exceed 30,000 gross square feet unless allowed by Special Permit.

i. Personal Service Establishments.

j. Financial Institutions.

k. General and Professional Offices.

l. Research Laboratory.

m. Business Sales and Services. (Allowed by right up to 15,000 gross sf., over 15,000 gross sf. shall require a special permit).

n. Restaurants Full Service. (Shall include take out service by right, but drive up windows shall require a special permit).

o. Fast Food Restaurants. (Allowed by right as part of an internal food court or similar setting).

p. Medical, and Dental Offices.

q. Muscular Therapy.

r. Veterinarian Facilities and Offices.

s. Printing and Publishing of Newspapers

t. Repair Establishments

u. Municipal Buildings and Essential Public Utilities.

v. Public Schools.

w. Bus or van transportation (shuttle) services including the associated shuttle bus stops and shelters.

**5.2 Uses by Special Permit**

For the initial construction only, the uses set forth below each shall require the issuance of a special permit. Multiple uses may be contained within a single building or structure constituting a Project.

a. Multi-family Housing. All residential development in the CWCOD shall be consistent with the City's affordable housing requirement; See Section 11.11", also consistent with the map defining areas for multi-family housing.

b. Mixed Use Retail. (Permitted by special permit if the total gross building area is less than 150,000 sf.)

c. Mixed Use Residential.

d. Theaters, Live or Motion Picture. (Not permitted as a primary use; permitted only if said use is not more than 50% of the floor area of a larger commercial project that employs shared off street parking requirements consistent with Section 7.0 of the CWCOD.

e. Fast Food Restaurants. (Free standing restaurants with or without drive up service windows).

f. Assisted Living / Continuing Care Community

g. Golf Driving Range. (Only indoor electronic golf driving ranges or similar virtual sports activities shall be considered as Recreation, Gainful Business.

h. Recreation, Gainful Business

i. Private Elementary or Secondary Schools including Recreation Facilities.

j. Extended Care Facility.

k. General and Special Hospitals.

l. Business or Trade School.

m. Trade Center.

n. Light Manufacturing.

o. Sale or Rental of Automobiles or Trucks. (In all instances the use must be entirely indoors)

p. Gasoline Service Stations.

o. Helicopter Pads

p. Rail Terminal for Freight. (Not including trash transfer station).

q. Passenger Transportation Terminals

r. Off –Site parking (See Section 8.3 of the CWCOD)

A. Accessory Uses By right

a. Community Center. (See Section 2.0 Definitions of the Woburn Zoning Ordinance)

b. Automatic Teller Machine

c. Recreation, Gainful Business

d. Accessory outside sales (Excluding industrial uses).

e. Accessory off street parking lots and buildings including overnight parking as described in Section 8.9 below.

f. Accessory repair and interior storage related to the conduct of a permitted use.

g. Kiosks permitted by right in all areas except within parking fields; the square foot area of the kiosk shall not be counted toward the total permitted floor area. One kiosk per 10,000 square feet of ground-level leasable space.

**5.3 Accessory Uses By Special Permit**

a. Accessory building such as a private garage or pool.

b. Private garages for use of residents on premises.

c. Communication towers, dishes or antenna on buildings. (Not permitted on multi-family buildings)

d. Accessory diagnostic imaging trailer.

e. Accessory outside storage for businesses. (Excluding industrial uses).

**5.4 Hours of Operation**

Except by the grant of a special permit by the City Council, the hours of operation for supermarkets, retail uses, fast food restaurants and gasoline service stations shall be from 5:00 a.m. to midnight. (added 12/10/2009)

6. **Re-tenanting After Initial Construction**

After the initial establishment of a use which requires a special permit, the

subsequent reuse of the same floor area authorized by the initial special permit shall not require a new special permit for the same use or by right use that does not cause any of the following changes:

a. An increase in the number of parking spaces as required by the original Special permit or site plan review.

b. A change to the external façade of the building. (A change in accessory signs shall not constitute a façade change if the sign area remains the same or remains otherwise in compliance with Section 13 Signs of the Woburn Zoning Ordinance).

7. **Dimensional and Density Regulations**

In the CWCOD, subject to applicable laws and regulations governing fire and safety, the following dimensional regulations shall apply. Building setback requirements shall not apply to the portions of a building or structure that are completely below grade. Further, parcels created for the purposes of financing or separated by a private or public right of way of less than 65 feet, shall not be required to comply individually with the following criteria; said criteria shall only apply to the entire lot. However, no two parcels may be more than 500 feet apart.

a. Minimum Lot Size: 100,000 square feet.

b. Minimum Lot Frontage: 100 feet.

c. Minimum Lot Width 40 feet.

d. Maximum Lot Coverage: 80% for mixed use and commercial projects; 60% for exclusively residential projects.

e. Minimum Open Space: 20% for mixed use residential and mixed use commercial projects; 40% for exclusively multi-family residential projects.

f. Minimum Front Yard Setback: 25 feet; parking permitted within 15 feet of front lot line.

g. Minimum Side Yard Setbacks: 20 feet; parking permitted within 10 feet of side lot lines.

h. Minimum Rear yard Setback: 20 feet; parking permitted within 10 feet of rear lot line.

i. Minimum Building setback from I-93 right of way: 50 feet.

j. Maximum Height: 130 feet but not to exceed 10 stories. See Section 2 Height of a Building) of the Woburn Zoning Ordinance.

k. Maximum Height within 150 feet of a Residential District: 3 stories and 45 feet.

l. The maximum residential density shall not exceed 25 residential units per acre unless:

a. Non-residential uses comprise a minimum of 60% of the total net floor area of all buildings in the entire development, in which case the maximum number of residential units may exceed 25 but in no event shall be more than 35 residential units per acre; or

b. Non-residential uses comprise a minimum of 65% of the total net floor area of all buildings in the entire development, in which case the maximum number of residential units may exceed 25 but in no event shall be more than 40 residential units per acre.

This density limitation shall not apply to Assisted Living/Continuing Care, General and Special Hospitals or Extended Care uses.

At the time of Site Plan Review or Special Permit, the City Council may grant a special permit for relief from the Dimensional Regulations set forth herein but no relief may be granted from the maximum residential density requirement.
(added 8/16/2018)

8. **Off-Street Parking Requirements**

The following parking standards shall apply in the CWCOD. If a specific use is not listed below then the Off –Street parking Regulations Parking of the Woburn Zoning ordinance shall apply (see Section 8)

**8.1 Residential Parking Standards**

a. 1.25 spaces per studio and one bedroom dwelling unit.

b. 1.75 spaces per 2 bedroom dwelling unit.

c. 2.00 spaces per three bedroom dwelling unit and one additional space for each bedroom thereafter.

d. Assisted Living / Continuing Care Community: 0.75 spaces per dwelling unit.

**8.2 Commercial Parking Standards**

Parking requirements shall not apply to basements if no public access is available or to any mechanical penthouse, or similar rooftop appurtenances.

a. Retail: 1 space / 250 feet of gross floor area.

b. Personal Service Establishments: 1 space/ 300 feet of gross floor area.

c. Office: 1 space / 350 sq ft. of gross floor area.

d. Research and Laboratory Space: 1 space / 400 sq ft. of gross floor area.

e. Fast Food Restaurant: 12 spaces per 1,000 sq ft of gross floor area.

f. Restaurants: 12 space per 1,000 gross sq. ft.

g. Restaurants located in a hotel: 6 spaces per 1,000 gross square feet.

h. Hotel: 1.0 spaces per hotel room.

i. General Assembly Conference: 1 space per 3 seats; for General Assembly or Conference Space within a hotel: 1 space per 4 seats. (Capacity to be determined by Fire Department).

j. Theatre or Cinema: 1 space per 3 patron seats. (Capacity to be determined by Fire Department).

k. Light manufacturing or repair businesses: 1 space / 500 square feet of gross floor area.

l. Medical or Dental Offices: 1 space / 250 square feet of gross floor area.

## 8.3 Off-Site Parking

For mixed use and commercial projects off-site parking (lots or structures) shall be permitted by a special permit granted by the City Council. The City Council must find that the off-site lot is within 500 feet of the lot accommodating the primary use, find that safe pedestrian access can be provided to the primary use, and that the off -site lot or parking structure constitutes not more than 25% of the required off street parking for the primary use (s); and further that the lot of land where the off-site parking is to be provided is either controlled as a long term lease acceptable to the City Council or is under the same ownership of the principal use(s) it is intended to serve.

## 8.4 Parking on Internal Roadways

At the time of Site Plan Review the City Council may permit all legally designed parking spaces located on internal private roadways to be counted towards the total number of off-street spaces if it can be shown that said calculation will improve overall operational efficiency and not generate traffic or pedestrian hazards.

## 8.5 Minimum Parking Space Design Standards

| Type of Parking | Parking Bay | Aisle Width | Max. Compact Cars |
|---|---|---|---|
| 180 degree | 22 ft. by 8 ft. | 12 ft. (one way) | NA |
| 90 degree | 18 ft by 9ft (standard) | 24 ft. (two way) | 30% |
| | 16 ft by 8 ft (compact cars) | | |
| 60 degree | 18 ft by 9ft (standard) | 18 ft. (one way) | 30% |
| | 16 ft by 8 ft (compact cars) | | |
| 45 degree | 18 ft by 9ft (standard) | 12 ft. (one way) | 30% |
| | 16 ft by 8 ft (compact cars) | | |

## 8.6 Shared Parking and Parking Reduction:

For mixed use residential projects or mixed use commercial projects, the City Council may grant a special permit to reduce the shared parking off-street parking requirements as determined by section 8.7 below, if the applicant can demonstrate a management plan whereby a lower amount of off street parking area is feasible.

**8.7 Shared Parking Methodology:**

Multiply the minimum parking requirement for each individual use by the appropriate percentage for each of the five designated time periods and then add the sums of the vertical column. The column total having the highest total value is the minimum shared parking space requirement for that combination of land uses.

| | Weekday | | Weekend | | |
|---|---|---|---|---|---|
| Night | Day | Evening - - | Day | Evening | Use |
| Midnight /7AM | 7AM/5PM | 5PM/MID - - | 6AM/6PM | 6PM/MID | |
| 100% | 60% | 90% | 80% | 90% | Residential |
| 5% | 100% | 10% | 10% | 5% | Office |
| 5% | 100% | 10% | 10% | 5% | Industrial |
| 5% | 100% | 10% | 10% | 5% | Research |
| 5% | 80% | 90% | 100% | 70% | Retail |
| 70% | 70% | 100% | 70% | 100% | Hotel |
| 10% | 50% | 100% | 70% | 100% | Restaurant |

| | Weekday | | Weekend | | |
|---|---|---|---|---|---|
| Night | Day | Evening - - | Day | Evening | Use |
| Midnight /7AM | 7AM/5PM | 5PM/MID - - | 6AM/6PM | 6PM/MID | |
| 10% | 40% | 100% | 80% | 100% | Theaters. |
| 5% | 100% | 10% | 20% | 5% | Day Care |

**8.8 Off Street Loading Requirements:**

At the time of Site Plan Review or Special Permit the City Council may be requested to waive or modify by Special Permit specific loading requirements of Section 8.7 of the Woburn Zoning Ordinance in order to generate more effective and efficient on site operational conditions and/or to improve the visual quality of the overall site plan.

**8.9 Overnight Vehicle Parking:**

The following shall be permitted by right to provide the following overnight parking, provided that all vehicles permitted are licensed in the City of Woburn:

Table 1 – Overnight Vehicle Parking Allowed By Right (1)(2)

| Use | # Vehicles Allowed By Right | Comment |
|---|---|---|
| Hotel Rental Car Service | 10 | Can be increased by 100% if contained within a garage. |
| Service Use | 4 vehicles per 1,000 gsf | Typical uses such as "Zoots", cleaning company, etc. |
| Professional Uses | 4 vehicles per 1,000 gsf | Typical uses such as a surveyor, engineer, government agency, etc. |
| Supermarket or Retail | 4 vehicles per 30,000 gsf | |

(1) Truck vehicle is defined as a trailer and cab.
(2) Other vehicle overnight parking uses may be allowed by Special Permit.

9. **Signs**

At the time of Site Plan Review or Special Permit the City Council may grant a special permit in relation to the Sign requirements of the Woburn Zoning Ordinance (See Section 13) by authorizing additional signs; larger signs; the relocation of signs in order to promote pedestrian and traffic safety; the setback of signs; signs that are more in keeping with building scale and/or visual relationship to major roadways such as I-93; or to improve the visual quality and operational efficiency of the overall site plan.

10. **Utilities and Easements**

a. Utility and Drainage Easements

Easements for Public utilities and enclosed or open drainage ways shall be retained in all CWCOD developments in widths and locations deemed necessary by the City Engineer. To the extent practicable, easements for waterlines, waste water lines, and storm sewers shall be located in the street right of way, and easements of all other utilities should be located in the rear lane rights of way or at the rear lot line. All easements shall be dedicated to public use for the named purpose and shall be aligned to minimize construction cost.

b. Underground Utilities

Utilities shall be located underground, unless proven unfeasible.

c. Easements in Areas Adjoining CWCOD developments.

If the city incurs costs obtaining easements from areas adjoining a proposed CWCOD development that are necessary to provide adequate drainage or to serve a CWCOD development with utilities, the costs shall be billable to the developer.

d. Storm water retention and infiltration.

Storm water shall be managed in accordance with the Massachusetts DEP Stormwater Management Standards.

11. **Development Impact Mitigation**

All uses developed in the CWCOD shall meet the requirements of Section 18 of the Woburn Zoning Code. All moneys generated by projects approved for the CWCOD development shall be expended within the CWCOD to improve and/or provide necessary infrastructure and public safety improvements.

(added 9/23/2009; amended 12/10/2009; 12/23/2009; 1/19/2012; 7/30/2019)

[This page intentionally left blank.]

# SECTION 24

# WIND ENERGY FACILITIES

## 24.1 Purpose and Intent

The purpose of this section is to promote the safe, effective and efficient use of wind energy facilities in appropriate locations, while protecting the public's health, safety and welfare. In addition, this ordinance provides a special permit process for the construction and operation of Wind Energy Facilities and to provide standards for the placement, design, construction, monitoring, modification and removal of Wind Energy Facilities that address public safety, minimize impacts on scenic, natural and historic resources of the city and provide adequate financial assurance for decommissioning.

The intent of this section is to recognize that wind energy is an abundant, renewable and non-polluting energy resource and that its conversion to electricity will reduce our dependence on nonrenewable energy resources and decrease the air and water pollution that results from the use of conventional energy sources. Wind energy facilities also enhance the reliability and power quality of the power grid, reduce peak power demands and help diversify the state's energy supply portfolio.

## 24.2 Wind Monitoring or Meteorological ("test" or "met") Tower

No wind monitoring or meteorological tower shall be erected, constructed, installed, or modified without first obtaining a special permit from the City Council. No Special Permit shall be granted unless the City Council determines that all such wind energy facilities shall be constructed and operated in a manner that minimizes any adverse visual, safety, and environmental impacts and that the proposed wind monitoring or meteorological tower complies with the Special Permit criteria under Section11of the Woburn Zoning Ordinance and:

(a) the specific site is an appropriate location for such use;
(b) the use will not adversely affect the neighborhood;
(c) no nuisance will be created by the use;

In order to make such determinations, the City Council may retain a technical expert/consultant to verify information presented by the applicant. The cost for such a review will be at the expense of the applicant pursuant to G.L. c. 44, § 53G as may from time to time be amended.

The wind monitoring or meteorological tower shall comply with the following requirements:

a. Setbacks

Wind monitoring or meteorological towers shall comply with the building setback requirements of the zoning district in which they are located. Additionally, wind monitoring or meteorological towers shall be set back a distance of at least 1.5 times the overall height of the tower from the nearest property line. Any supporting structure including guy wires shall not be located closer to any property line or street line than the distance equal to the minimum building setback required for the zoning district in which the tower is located.

b. Height

Wind monitoring or meteorological towers shall comply with the height requirements of the zoning district which the tower is located, unless the City Council grants a Special Permit after determining that a height in excess of that required in the zoning district is required to accomplish the proposed purpose of the tower. In order to make such determinations, the City Council may retain a technical expert/consultant to verify information presented by the applicant. The cost for such a review will be at the expense of the applicant pursuant to G.L. c. 44, § 53G as may from time to time be amended.

c. Time limit

A special permit for a wind monitoring or meteorological tower shall be limited to no more than eighteen months after construction has commenced.

24.3 Roof Top Wind Energy Facility

No Roof Top Wind Energy Facility shall be erected, constructed, installed or modified without first obtaining a Special Permit from the City Council. No Special Permit shall be granted unless the City Council determines that all such Roof Top Wind Energy Facilities shall be constructed and operated in

a manner that minimizes any adverse visual, safety, and environmental impacts and that the proposed Roof Top Wind Energy Facility complies with the Special Permit criteria under Section11of the Woburn Zoning Ordinance and:

(a) that the facility is in an appropriate location for such use;
(b) that the use will not adversely affect the neighborhood;
(c) that no nuisance will be created by the use;

In order to make such determinations, the City Council may retain a technical expert/consultant to verify information presented by the applicant. The cost for such a review will be at the expense of the applicant pursuant to G.L. c. 44, § 53G as may from time to time be amended.

(a) General Requirements. All roof top wind energy facilities shall conform to the following:

(1) The power generated is for on-site consumption only; and
(2) The combined total rated nameplate capacity shall be 10 kW or less.

(b) Connection to the power grid. Approval of roof top wind energy facilities neither permits nor denies access to the power grid. However, no roof top wind energy facility shall be installed until evidence has been given that the utility company has been informed of the customer's intent to install an interconnected customer-owned generator. No roof top wind energy facility that is interconnected with the electric system may be put in operation prior to execution of an Interconnection Agreement with the local electric utility. Off-grid systems shall be exempt from this requirement.

(c) Height. The height for the Wind Energy Facility, Roof Top turbine shall not exceed fifteen (15) feet in the following zoning districts: B-N, B-H, B-D, B-I, I-P, IP-2, I-G, O-P and OP-93. The height for the Wind Energy Facility, Roof Top turbine is measured from the point of attachment to the roof to the highest point of the turbine rotor or tip of the turbine blade when it reaches its highest elevation.

(d) Special permit application. No Roof Top Wind Energy Facility, shall be constructed unless a Special permit has been issued to the owner of the property. The Special permit application shall contain the following additional information:

(1) The Special permit application shall contain the following: narrative describing the proposed wind energy facility, the proposed total rated

capacity of the wind energy facility, the proposed number, types and height of Roof Top Wind Energy Facilities to be constructed.

(2) Other relevant information may be reasonably requested by the City Council to ensure compliance with the requirements of this Ordinance.

(e) Installation and design.

(1) All structural, electrical and mechanical components of the wind energy facility shall conform to relevant and applicable local, state and national codes at the time of application.

(2) A structural certification of the roof must be completed and submitted with the Special permit application to ensure that the roof is suitable to hold the Roof Top Wind Energy Facility.

(3) The Roof Top Wind Energy Facility shall comply with the provisions of the Massachusetts Department of Environmental Protection's ("DEP") Division of Air Quality Noise Regulations (310 CMR 7.10) in effect on August 1, 2009 and any limitations on noise imposed by The City Council.

(4) All Roof Top Wind Energy Facilities shall have an automatic braking, governing or feathering system to prevent uncontrolled rotation, over speeding and excessive pressure on the roof, structure, rotor blades and turbine components.

(5) The visual appearance of Roof Top Wind Energy Facilities shall at a minimum:

a. Be a non-obtrusive color such as white, off-white or gray.
b. Shall not be artificially lighted, except to the extent required by the Federal Aviation Administration or other applicable authority that regulates air safety.
c. Shall not display any advertising except for manufactures identification and such identification shall not exceed two square feet in size and furthermore no flags, streamers or decorative item shall be attached to the Roof Top Wind Energy Facility.

24.4 <u>Small Wind Energy Facility</u>

No Small Wind Energy Facility shall be erected, constructed, installed or

modified without first obtaining a Special Permit from the City Council. This subsection applies to Small Wind Energy Facilities no greater than 60 kilowatts of rated nameplate capacity proposed to be constructed after the effective date of this section. This subsection is not intended to cover roof-mounted, building-integrated, building-mounted or architectural wind systems; this subsection only covers stand-alone tower mounted systems. A Small Wind Energy Facility shall only be maintained in compliance with all requirements set forth herein and as described in the Special Permit. No Special Permit shall be granted unless the City Council determines that all such wind energy facilities shall be constructed and operated in a manner that minimizes any adverse visual, safety, and environmental impacts. In order to make such determinations, the City Council may retain a technical expert/consultant to verify information presented by the applicant. The cost for such a review will be at the expense of the applicant pursuant to G.L. c. 44, § 53G as may from time to time be amended.

No Special Permit shall be granted unless the City Council finds, in writing, that the proposed Small Wind Energy Facility complies with the Special Permit criteria under Section11of the Woburn Zoning Ordinance and:

(a) the specific site is an appropriate location for such use;
(b) the use will not adversely affect the neighborhood;
(c) no nuisance will be created by the use;
(d) adequate and appropriate facilities will be provided for the proper operation of the use; and
(e) the application information submitted is adequate, complete and containing sufficient information for the City Council to consider approving the special permit request. If the City Council finds that the information is not adequate or complete, it may continue the hearing on the application to allow the applicant to submit additional information which may be needed for a decision.

The City Council in issuing a Special Permit for a small wind energy facility may impose reasonable conditions, safeguards and limitations on time and use and may require the applicant to implement all reasonable measures to mitigate reasonably foreseeable adverse impacts of the small wind energy facility. At the discretion of the City Council and if required by the Special Permit, the owner of an small wind energy facility, or other responsible appropriate person, may be required to provide to the building inspector annual certification demonstrating continuing compliance with applicable standards regarding noise, shadow flicker, structural integrity, air traffic safety, radio emissions safety, or other issues of importance to the purposes of this regulation. Including that the owner of a small wind energy facility, or other responsible appropriate person, may be required to provide

to the building inspector annual certification demonstrating continuing compliance with applicable standards regarding noise, shadow flicker, structural integrity, air traffic safety, radio emissions safety, or other issues of importance to the purposes of this regulation. The building inspector may retain a technical expert/consultant to verify information presented by the applicant. The cost for such a review will be at the expense of the applicant pursuant to G.L. c. 44, § 53G as may from time to time be amended.

Small wind energy facility owners and operators shall maintain the small wind energy facility in good condition and provide for the ongoing maintenance in accordance with the conditions of the Special Permit, manufacturer's specifications and governmental regulations for all structural, electrical and mechanical operations to ensure safe operation of the small wind energy facility. Any small wind energy facility found to be unsafe by the Building Inspector shall be repaired or removed pursuant to his direction.

Small Wind Energy Facilities shall comply with the following requirements:

a. Yard Setback Requirements

All small wind energy facilities or wind turbines shall be located in the rear yard of the subject property and shall comply with the building setback requirements of the zoning district in which they are located. Additionally, small wind turbines shall be set back a distance of at least 1.5 times the overall height of the device from the nearest property line. Any supporting structure including guy wires shall not be located closer to any property line or street line than the distance equal to the minimum building setback required for the zoning district in which the facility is located. In addition, guy wires shall not be secured to trees but shall be secured to stationary anchors and located away from trees or other structures that may interfere with the safe operation of the small wind energy facility.

b. Height

No small scale wind turbine shall be higher than 65 feet.

c. Number

The number of small scale wind turbines on any lot shall not exceed two (2).

d. Visual Impacts

The applicant shall demonstrate through project site planning and proposed mitigation that the small wind energy facility's visual impacts will be minimized for surrounding neighbors and the community. This may include, but not be limited to information regarding site selection, wind generator design or appearance, buffering, and screening of ground mounted electrical and control equipment. Where wind characteristics permit, wind turbines shall be set back from the tops of visually prominent ridgelines to minimize the visual impacts. In addition, all electrical conduits shall be underground, except when the City Council finds that the financial costs are prohibitive.

e. Clearing

Clearing of natural vegetation shall be limited to that which is necessary for the construction, operation and maintenance of the small wind energy facility and as otherwise allowed by Special Permit of the City Council.

f. Lighting & Federal Aviation Requirements

There shall be no lighting affixed to a small wind turbine unless such lighting is required by the Federal Aviation Administration (FAA). Small wind turbines shall be built to comply with all applicable Federal Aviation Administration regulations. If lighting is required, the applicant shall provide a copy of the FAA determination to establish the required markings and/or lights for the small wind turbine.

g. Appearance, color, finish

The small scale wind turbine shall be painted a non-reflective color that blends with its surroundings. However, visible, reflective, colored objects, such as flags, reflectors, or tape shall be placed on the anchor points of guy wires and along the guy wires up to a height of 10 feet from the ground, as approved by the City Council.

h. Signage and advertizing

Signs on small scale wind turbines shall be limited to:

(1) A sign necessary to identify the owner, provide a 24-hour emergency contact phone number, and warn of any danger and such sign shall not exceed two square feet in size.
(2) Educational signs providing information about the facility and the

benefits of renewable energy and such signs shall not exceed ten square feet in total area.

(3) Reasonable identification of the manufacturer or operator of the wind energy facility, not to include any advertising display and such sign shall not exceed two square feet in size.

i. Noise

The small scale wind turbine and associated equipment shall comply with the provisions of the Massachusetts Department of Environmental Protection's ("DEP") Division of Air Quality Noise Regulations (310 CMR 7.10) in effect on August 1, 2009, unless the applicant provides written confirmation from DEP that those provisions are not applicable to the proposed facility.

j. Shadow Flicker

Small wind energy turbines shall be sited in a manner that does not result in significant shadow flicker impacts. Significant shadow flicker is defined as more than 30 hours per year on abutting occupied buildings. The applicant has the burden of proving that the shadow flicker will not have significant adverse impact on neighboring or adjacent uses. Potential shadow flicker will be addressed either through siting or mitigation measures.

k. Connection to the power grid

Approval of a small wind energy facility neither permits nor denies access to the power grid. However, no small wind energy facility shall be installed until evidence has been given that the utility company has been informed of the customer's intent to install an interconnected customer-owned generator. No small wind energy facility that is interconnected with the electric system may be put in operation prior to execution of an Interconnection Agreement with the local electric utility. Off-grid systems shall be exempt from this requirement.

l. Safety Features

The wind turbine shall be designed and installed so as not to provide step bolts or a ladder readily accessible to the public for a minimum height of 8 feet above the ground. The minimum distance between the ground and any part of a rotor shall be thirty (30) feet. All wind turbines shall have an automatic braking, governing or feathering system to

prevent uncontrolled rotation, overspeeding and excessive pressure on the tower structure, rotor blades and turbine components.

m. Unauthorized access

All related components of the small wind energy facility shall be designed and protected to prevent unauthorized access. Fencing serving this purpose but compatible with the characteristics of the neighborhood may be required by the City Council to control access to a small wind energy facility. In addition, wind turbines and other parts of the facility including all ground-mounted electrical and control equipment shall also be labeled and secured to prevent unauthorized access.

n. Abandonment

1. At such time that a small wind energy facility is scheduled to be abandoned or discontinued, the applicant will notify the building inspector by certified U.S. mail of the proposed date of abandonment or discontinuation of operations.

2. Upon abandonment or discontinuation of use, the owner shall physically remove the small wind energy system within 90 days from the date of abandonment or discontinuation of use. This period may be extended at the request of the owner and at the discretion of the building inspector. “Physically remove” shall include, but not be limited to:

   a. Removal of the wind generator and tower and related above-grade structures.

   b. Restoration of the location of the small wind energy facility to its natural condition, except that any landscaping, grading or below-grade foundation may remain in its same condition at initiation of abandonment.

3. In the event that an applicant fails to give such notice, the system shall be considered abandoned or discontinued if the system is out-of-service for a continuous 12-month period. After the 12 months of inoperability, the building inspector may issue a Notice of Abandonment to the owner of the small wind energy system. The owner shall have the right to respond to the Notice of Abandonment within 30 days from Notice receipt date. After review of the information provided by the owner, the building inspector shall determine if the small wind energy system has been abandoned. If it

is determined that the small wind energy facility has not been abandoned, the building inspector shall withdraw the Notice of Abandonment and notify the owner of the withdrawal.

4. If the owner fails to respond to the Notice of Abandonment or if, after review by the building inspector, it is determined that the small wind energy facility has been abandoned or discontinued, the owner of the small wind energy system shall remove the wind generator and tower at the owner's sole expense within 30 days of receipt of the Notice of Abandonment. This period may be extended at the request of the owner and at the discretion of the building inspector. If the owner fails to physically remove the small wind energy system after the Notice of Abandonment procedure, the Building Inspector shall have the authority to enter the owner's property and remove the system at the owner's expense.

24.5 Large Wind Energy Facility

No large wind energy facility shall be erected, constructed, installed or modified without a special permit from the City Council as provided herein.

a. Special permit

Large scale wind energy facilities shall be subject to the special permit requirements set forth below and must be operated in compliance with said requirements and any further requirements which the City Council may impose upon the special permit, and in a manner that minimizes any adverse visual, safety, and environmental impacts.

The City Council shall act as the special permit granting authority for all applications under this Section. No special permit shall be granted unless the City Council finds in writing that:

(1) the specific site is an appropriate location for such use;
(2) the use is not expected to adversely affect the neighborhood;
(3) there is not expected to be any serious hazard to pedestrians or vehicles from the use;
(4) no nuisance is expected to be created by the use; and
(5) adequate and appropriate facilities will be provided for the proper operation of the use.

In granting a special permit under this Section, the City Council may impose reasonable conditions, safeguards and limitations and may

require the applicant to implement all reasonable measures to mitigate unforeseen adverse impacts of the wind facility, should they occur.

b. General Siting Standards

(1) Height.

Large Wind Energy facilities shall not be higher than required to make the project economically feasible. The City Council must determine that the height of the facility will not derogate from the intent of this chapter or be detrimental or injurious to the public.

(2) Setbacks

Wind Turbines shall be set back a distance equal to at least 1.5 times the overall height of the wind turbine from the nearest property line and from the nearest private or public way street line. Any supporting structure including guy wires shall not be located closer to any property line or street line than the distance equal to the minimum building setback required for the zoning district in which the facility is located.

c. Design Standards

(1) Color and Finish

The color of the large scale wind energy conversion device shall be subject to final approval by the City Council, although a neutral, nonreflective exterior color designed to blend with the surrounding environment is encouraged.

(2) Lighting

Wind Turbines shall be lighted only if required by the Federal Aviation Administration. Lighting of other parts of a large wind energy facility, such as appurtenant structures, shall be limited to that required for safety and operational purposes and shall be reasonably shielded from abutting properties.

(3) Signage

Signs at a large wind energy facility shall be limited to:

(a) A sign necessary to identify the owner, provide a 24-hour

emergency contact phone number, and warn of any danger and such sign shall not exceed two square feet in size.

(b) Educational signs providing information about the facility and the benefits of renewable energy and such signs shall not exceed ten square feet in total area.

(4) Advertising

Wind turbines shall not be used for displaying any advertising except for reasonable identification of the manufacturer or operator of the wind energy facility and such sign shall not exceed two square feet in size.

(5) Connections

Reasonable efforts shall be made to locate wires from the wind turbine underground, depending on appropriate soil conditions, shape, and topography of the site or any requirements of the utility provider. Electrical transformers for utility interconnections may be above ground if required by the utility provider.

(6) Appurtenant Structures

The City Council may impose reasonable requirements concerning the bulk, height, setbacks, and building coverage of structures appurtenant to a large wind energy facility, as well as parking requirements for such structures. All appurtenant structures, including but not limited to, equipment shelters, storage facilities, transformers, and substations, shall be architecturally compatible with each other and shall only be used for housing of equipment for the particular large wind energy facility on the site. Whenever possible, structures should be shielded from view by vegetation and/or located in an underground vault and joined or clustered to avoid adverse visual impacts.

(7) Support Towers

Monopole towers are the preferred type of support for the wind turbines.

d. Safety, Aesthetic and Environmental Standards

All wind turbines shall have an automatic braking, governing or

feathering system to prevent uncontrolled rotation, overspeeding and excessive pressure on the tower structure, rotor blades and turbine components.

(1) Unauthorized Access

Wind turbines and structures appurtenant to large wind energy facilities shall be designed to prevent unauthorized access. Fencing serving this purpose but compatible with the characteristics of the neighborhood may be required by the City Council to control access to a large wind energy facility. In addition, wind turbines and other parts of the facility including all ground-mounted electrical and control equipment shall also be labeled and secured to prevent unauthorized access. The wind turbine shall be designed and installed so as not to provide step bolts or a ladder readily accessible to the public for a minimum height of 8 feet above the ground. The minimum distance between the ground and any part of a rotor shall be thirty (30) feet.

(2) Shadow/Flicker

Wind turbines shall be sited in a manner that minimizes shadowing or flicker impacts. The applicant has the burden of proving that any shadow or flicker effect resulting from the turbine will not have any significant adverse impact on neighboring or adjacent uses either because of the proposed siting of the facility or because of proposed mitigation measures.

(3) Noise

Wind Turbines and associated equipment shall conform to the provisions of the Department of Environmental Protection's ("DEP") Division of Air Quality Noise Regulations (310 CMR 7.10) in effect on August 1, 2009, unless the applicant provides written confirmation from DEP that those provisions are not applicable to the proposed facility.

An analysis prepared by a qualified engineer shall be presented to demonstrate that the proposed facility will be in compliance with these noise standards.

(4) Connection to the power grid

Approval of a large wind energy facility neither permits nor denies access to the power grid.

(5) Utility Notification

No wind energy facility shall be installed until evidence has been given that the utility company has been informed of the customer's intent to install an interconnected customer-owned generator. Off-grid systems shall be exempt from this requirement.

(6) Land Clearing, Soil Erosion, and Habitat Impacts

Clearing of natural vegetation shall be limited to that which is necessary for the construction, operation, and maintenance of the large wind energy facility and is otherwise prescribed by applicable laws, regulations, and ordinances.

(7) Modifications

All material modifications to a large wind energy facility made after issuance of the special permit shall be subject to further special permit approval by the City Council in accordance with this Section.

e. Abandonment or Decommissioning

(1) Removal Requirements

Any large scale wind energy conversion facility which has reached the end of its useful life or has been abandoned shall be removed. When the wind facility is scheduled to be decommissioned, the applicant shall notify the Building Commissioner by certified mail of the proposed date of discontinued operations and plans for removal. The owner/operator shall physically remove the wind facility no more than 150 days after the date of discontinued operations. Within the same 150-day period, the wind facility site shall be restored to the state it was in before the facility was constructed. More specifically, decommissioning shall consist of:

(a) Physical removal of all wind energy conversion devices, structures, equipment, security barriers and transmission lines from the site.

(b) Disposal of all solid and hazardous waste in accordance with local and state waste disposal regulations.

(c) Stabilization or re-vegetation of the site as necessary to minimize erosion. The City Council may allow the owner to leave landscaping or designated below-grade foundations in order to minimize erosion and disruption to vegetation.

(2) Abandonment

Absent notice of a proposed date of decommissioning, the facility shall be deemed to be abandoned if the facility is not maintained or operated for a period of one year except where prior written consent of the City Council was obtained, or upon expiration of the special permit without renewal or extension.

(3) Financial Surety

As a condition of the special permit, the City Council shall require the applicant to provide surety in an amount determined by the City Council to be necessary to ensure proper removal of the facility upon abandonment. Such surety may be provided in the form of a bond acceptable to the City Council or by placing a sum of money into an account to be held by the City Treasurer. Such surety will not be required for municipally or state owned facilities.

The applicant shall submit to the City Council a fully inclusive estimate of the costs associated with removal, prepared by a qualified, professional engineer registered to practice in the Commonwealth of Massachusetts.

The applicant shall provide written authorization and, as necessary, shall provide the written authorization of the owner of the subject property, for the City or its agents to enter upon the subject property to remove the wind facility in the event that the applicant fails to do so within 150 days after abandonment or decommissioning as required under this Section.

f. Term of Special Permit

Unless abandoned earlier, a special permit issued for a large wind energy facility shall automatically expire after 25 years, unless extended or renewed by the City Council upon a finding that there has been satisfactory operation of the facility in accordance with the requirements

of the special permit and this Section. An application for renewal or extension must be submitted at least 180 days prior to expiration of the special permit. Submission of such an application shall allow for continued operation of the facility until the City Council acts. Upon final expiration of the special permit (including extensions and renewals), the wind facility shall be deemed abandoned and shall be removed as required by this Section.

g. Application Process and Requirements

(1) Application Procedures

(a) General

The special permit application for a large scale wind energy conversion facility shall be filed in accordance with Section 11 of the Woburn Zoning Ordinance and the rules and regulations of the City Council concerning special permits.

(b) Site Control

At the time of its application for a special permit, the applicant shall submit documentation of actual or prospective control of the project site sufficient to allow for installation and use of the proposed facility. Documentation shall also include proof of control over setback areas and access roads, if required. Control shall mean the legal authority to prevent the use or construction of any structure for human habitation within the setback areas.

(c) Proof of Liability Insurance

The applicant shall be required to provide evidence of liability insurance in an amount and for a duration sufficient to cover loss or damage to persons and structures occasioned by the failure of the facility.

(d) Professional Fees

The City Council may impose reasonable fees for the employment of outside consultants to be expended in accordance with the requirements and provisions of MGL C. 44, § 53G.

(e) Additional Requirements

The City Council may require that the applicant arrange for a balloon or crane test at the proposed site to illustrate the height of the proposed facility. The date, time, and location of such test shall be advertised in a newspaper of general circulation in the City at least 14 days, but not more than 21 days prior to the test.

(2) Visualizations

The City Council shall select between three and six sight lines, including from the nearest building with a view of the wind facility, for pre- and post construction view representations. Sites for the view representations shall be selected from populated areas or public ways within a 2-mile radius of the wind facility. View representations shall have the following characteristics:

(a) View representations shall be in color and shall include actual pre-construction photographs and accurate post construction simulations of the height and breadth of the wind facility (e.g. superimpositions of the wind facility onto photographs of existing views).

(b) View representations shall include existing, or proposed, buildings or tree coverage.

(c) View representations shall be accompanied by a description of the technical procedures followed in producing the visualization (distances, angles, lens, etc).

(3) Landscape Plan

A plan indicating all proposed changes to the landscape of the site, including temporary or permanent roads or driveways, grading, vegetation clearing and planting, exterior lighting (other than FAA lights), screening vegetation or structures. Lighting shall be designed to minimize glare on abutting properties and, except as required by the FAA, be directed downward with full cut-off fixtures to reduce light pollution.

(4) Operation & Maintenance Plan

The applicant shall submit a plan for maintenance of access roads

and storm water controls, as well as general procedures for operational maintenance of the wind facility.

(5) Waiver

The City Council may waive or modify the submission requirements contained herein where it finds such waiver or modification shall not adversely affect the public health, safety, or welfare, and will not derogate from the intent of this Section.

(6) Monitoring and Maintenance

(a) After the wind energy conversion facility is operational, the applicant shall submit to the town at annual intervals from the date of issuance of the Special Permit, a report detailing operating data for the facility (including but not limited to days of operation, energy production, etc.).

(b) The applicant shall maintain the wind energy conversion facility in good condition. Such maintenance shall include, but not be limited to, painting, structural integrity of the foundation and support structure and security barrier (if applicable), and maintenance of any buffer areas and landscaping. The applicant shall be responsible for the cost of maintaining the wind facility and any access road, unless accepted as a public way, and the cost of repairing any damage occurring as a result of operation and construction.

(c) The applicant or facility owner shall maintain a phone number and identify a responsible person for the public to contact with inquiries and complaints throughout the life of the project.

(7) Emergency Services

The applicant shall provide a copy of the project summary, electrical schematic, and site plan to the local emergency services departments, as designated by the City Council. The applicant shall cooperate with local emergency services in developing an emergency response plan for the large wind energy facility.

All means of disconnecting the large wind energy facility shall be clearly marked.

The applicant or facility owner shall maintain a phone number and identify a responsible person for the public to contact with inquiries and complaints throughout the life of the project.

(added 11/24/2009)

[This page intentionally left blank.]

# SECTION 25

# UPPER MAIN STREET OVERLAY (UMS) DISTRICT

A. Purpose of District

1. To promote the health, safety and general welfare of the community by encouraging the redevelopment of abandoned, underutilized, and/or obsolete commercial and industrial sites to residential use.

2. To promote high quality design and minimize negative impacts on the surrounding area.

B. Scope of Authority

1. The Upper Main Street Overlay (UMS) District is hereby established as an overlay district. The UMS shall only be applied to properties zoned R-3 that have frontage along Route 38 (Main Street) of at least 200 feet and are at least 500 feet from the Wilmington Town line. Inclusion of any property into the UMS shall also require a zoning map change consistent with the rules and regulations of the Woburn Zoning Ordinance. (amended 9/18/2012)

2. The provisions of the UMS shall only apply to projects using the criteria set forth herein. Any building, structure or use of land that is not part of a UMS development proposal shall maintain the rights and privileges of the underlying district without modification by the UMS.

C. Associated Criteria

1. All UMS proposals shall be subject to Site Plan Review Section 12a, as applicable.

2. All UMS proposals shall be subject to Section 18, Development Impact Mitigation, as applicable.

3. All UMS proposals shall be subject to Section 11.11 Affordable Housing Requirements, as applicable.

D. By Right Uses

1. None

E. Special Permit Uses

1. A special permit issued by the Woburn City Council shall be required for:

a. Townhouse or Garden Apartment.

b. Congregate Elderly Housing.

c. Elevator Apartment.

d. Accessory offices, clubhouses, personal services and recreation amenities consistent with the uses noted above.

F. Dimensional and Density Regulations

1. Lot area, frontage and yards.

Minimum Lot Area: 4 acres
Minimum Lot Frontage: 200 feet
Minimum Front Yard Setback: 25 feet
Minimum Side Yard Setback: 25 feet
Minimum Rear Yard Setback: 30 feet
(amended 9/18/2012)

2. Lot coverage and Landscaped Usable Open Space

Maximum Building Coverage: 30%
Minimum Landscaped Usable Open Space: 40%

3. Building Height and Intensity of Use

Maximum height for UMS developments shall be four (4) stories and 60 feet. The maximum number of residential units shall not be more than fifty-seven (57).

4. More than One Building on a Lot

All UMS development may contain more than one principal building on a lot.

G. Off-Street Parking Requirements

1. At a minimum, off-street parking spaces shall be provided as follows:

    a. Congregate Elderly Apartments: 1.5 spaces per unit and 1 visitor space per 10 units.

    b. Townhouse, Garden Apartments or Elevator Apartments: 1.25 spaces per studio and one bedroom dwelling units, 1.75 spaces per two bedroom dwelling units and 2.00 spaces per three bedroom dwelling units.

(added 6/29/2010)

[This page intentionally left blank.]

# SECTION 26

# SOLAR PHOTOVOLTAIC INSTALLATIONS

26.1 Purpose

The purpose of this ordinance is to promote the creation of new solar photovoltaic installations in accordance with M.G.L. c.40A, §9B and the Green Communities Act, M.G.L. c.25A, §10, by providing standards for the placement, design, construction, operation, monitoring, modification and removal of such installations that address public safety, minimize impacts on scenic, natural and historic resources and to provide adequate financial assurance for the eventual decommissioning of such installations.

26.2 Applicability

This ordinance applies to all solar energy systems and to physical modifications that materially alter the type, configuration, or size of these systems or related equipment. Solar energy systems on municipal and school properties, except for O-S (Open Space), may be allowed in all zoning districts, but only by Special Permit from the City Council, and said solar energy systems shall comply with all setback requirements as outlined in Section 26.5. Roof mounted solar installations in all zoning districts, including municipal and school properties shall be a by right use not requiring a special permit or site plan review.

26.3 General Requirements for all Solar Photovoltaic Installations

The following requirements are common to all solar photovoltaic installations to be sited in designated locations.

1. Compliance with Laws, Ordinances and Regulations: The construction and operation of all solar photovoltaic installations shall be consistent with all applicable local, state and federal requirements, including but not limited to all applicable safety, construction, electrical, and communications requirements. All buildings and fixtures forming part of a solar photovoltaic installation shall be constructed in accordance with the State Building Code and each component of the solar energy system that is regulated by the building code shall be performed by those that are authorized to do such work in the Commonwealth of Massachusetts. Failure to use licensed personnel in all aspects of construction and installation of a solar photovoltaic installation shall be grounds for revocation of any approval granted under site plan review and/or any building permit issued.
2. Permits and Inspections: No solar photovoltaic installation shall be constructed, installed or modified as provided in this section without first obtaining all required building, electrical and plumbing permits.

3. The total capacity of all existing and proposed ground-mounted solar photovoltaic installations on the lot shall be measured in determining whether an installation is large-scale or small-scale.
4. All solar carports/canopies and ground-mounted solar photovoltaic installations shall be screened from view of abutting properties and streets, to the extent practicable. Screening may consist of fences, vegetation, evergreen plantings, topography and earthen berms so long as they do not interfere with or encroach upon sight lines or violate other provisions of the Woburn Municipal Code, Woburn Zoning Code or the Woburn Land Subdivision Rules and Regulations.
5. Security fencing shall be required around any medium-scale or large-scale ground mounted solar energy systems. Security fencing associated with ground mounted solar photovoltaic installations shall not be subject to the provisions of Section 5.3.2 of this Ordinance.

26.4 <u>Use Regulations</u>

26.4.1 Residential District Uses

(a) Uses Permitted as of Right

i. Roof-Mounted Solar Energy Systems

(b) Uses Permitted by Special Permit

i. Small-Scale, Medium-Scale and Large-Scale Ground-Mounted Solar Energy Systems on municipal and school properties

26.4.2 Non-Residential District Uses

(a) Uses Permitted as of Right

i. Roof-Mounted Solar Energy Systems
ii. Small-Scale Ground-Mounted Solar Energy Systems

(b) Uses Allowed through Site Plan Review

i. Medium-Scale Ground-Mounted Solar Energy Systems
ii. Large-Scale Ground-Mounted Solar Energy Systems
iii. Solar Carport/Canopy

(c) Uses Allowed By Special Permit

i. Small-Scale, Medium-Scale and Large-Scale Ground-Mounted Solar Energy Systems on municipal and school property

26.5 Dimensional and Density Requirements

26.5.1 Setbacks – Residential and Non-residential Districts

For all ground-mounted solar photovoltaic installations the minimum front, side and rear setbacks shall be as follows:

| | |
|---|---|
| Residential: | Front Setback: 50 feet; |
| | Side Setback: 50 feet; |
| | Rear Setback: 50 feet. |
| Non-residential: | Front Setback: 25 feet |
| | Side Setback: 25 feet; |
| | Rear Setback: 25 feet. |

26.5.2 Maximum height - The height limit for all solar carports/canopies shall be twenty (20) feet and all other ground-mounted solar photovoltaic installations shall be fifteen (15) feet.

26.5.3 All other yard, and space and height requirements of the underlying zoning district shall also apply, except that no ground-mounted solar photovoltaic installations shall be installed in front yards.

26.5.4 Additional Setback Requirement- When a Ground Mounted Solar Photovoltaic installation is constructed on a lot which adjoins land in a Residential Zoning District in the City of Woburn, there shall be an additional setback of seventy (70) feet in addition to the minimum side and rear yard setbacks

26.5.5 Appurtenant Structures

All appurtenant structures to a ground-mounted solar photovoltaic installation shall be subject to the requirements of this Zoning Ordinance concerning yard, space, height and setback requirements. All such appurtenant structures, including but not limited to, equipment shelters, storage facilities, transformers, and substations, shall be architecturally compatible with each other.

26.6 Solar Photovoltaic Installation Site Plan Review and Special Permit.

For purposes of this Section, Site Plan Review shall be conducted by the City Council prior to the construction, installation or modification of certain Ground Mounted Solar Photovoltaic Installations as provided below and, where applicable, Section 12 of this Ordinance. In accordance with Section 22(c) of the Massachusetts Green Communities Act, Solar Photovoltaic Installation Site Plan Review shall be expedited and no decision shall be rendered more than six (6) months after the date of receipt of a

complete application as determined by the City Council. For those projects that require a Special Permit, the City Council shall be the special permit granting authority and special permit procedures shall apply.

26.7 Application and Plan Requirements.

A completed application for Solar Photovoltaic Installation Site Plan Review or Special Permit shall be filed with the City Council, along with the applicable fee. Upon receipt of an application, the City Council may engage, at the applicant's cost, professional and technical consultants, including legal counsel, to assist the City Council with its review of the application, in accordance with the requirements of M.G.L. c.44, §53G. The City Council may direct the applicant to deposit funds with the City Auditor for such review at the time the application is determined to be complete, and may direct the applicant to add additional funds as needed upon notice. Failure to comply with this section shall be grounds for denying the application. Upon approval of the application, any excess amount attributable to the application processing by the City Council shall be refunded to the applicant.

1. Plans: All plans and maps shall be prepared, stamped and signed by a Professional Engineer licensed to practice in Massachusetts.

2. Required Documents: the project proponent shall provide the following documents:

   (a) A site plan showing:
      i. Property lines and physical features, including roads, for the project site;
      ii. Proposed changes to the landscape of the site, grading, vegetation clearing and planting, exterior lighting, screening vegetation or structures;
      iii. Blueprints or drawings of the solar photovoltaic installation signed by a Professional Engineer licensed to practice in the Commonwealth of Massachusetts showing the proposed layout of the system and any potential shading from nearby structures;
      iv. One or three line electrical diagram detailing the solar photovoltaic installation, associated components, and electrical interconnection methods, with all National Electrical Code compliant disconnects and overcurrent devices;
      v. Documentation of the major system components to be used, including the PV panels, mounting system, and inverter;
      vi. Name, address, and contact information for proposed system installer;
      vii. Name, address, phone number and signature of the project proponent, as well as all co-proponents or property owners, if any; and
      viii. The name, contact information and signature of any agents representing the project proponent.

(b) Documentation of actual or prospective access and control of the project site sufficient to allow for construction and operation of the proposed solar photovoltaic installation;

(c) An operation and maintenance plan which shall include measures for maintaining safe access to the installation, storm water controls, as well as general procedures for operational maintenance of the installation including provisions to prevent reflection of glare and/or concentrated energy onto adjacent structures and properties;

(d) The underlying Zoning district designation for the parcel(s) of land comprising the project site (submission of a copy of a zoning map with the parcel(s) identified is suitable for this purpose);

(e) Proof of liability insurance;

(f) Description of financial surety that satisfies Section 26.11.3;

(g) Proof that the utility company that operates the electrical grid where the installation is to be located has been informed of the installation owner or operator's intent to install an interconnected customer-owned generator as well as documentation from said utility that it will connect the proposed customer-owned generator into its power grid. Off-grid systems shall be exempt from this requirement; and

(h) The Applicant and owner shall execute a Right of Entry Form for the benefit of the City, in a form to be approved by the City Solicitor, to permit entry and removal in the event of Abandonment as provided in Section 26.11.2.

26.8 Design Standards

In addition to the requirements of Section 26.5, all Ground Mounted Solar Photovoltaic Installations shall be constructed as follows:

26.8.1 Lighting

Lighting of solar photovoltaic installations shall be consistent with local, state and federal law. Lighting of other parts of the installation, such as appurtenant structures, shall be limited to that required for safety and operational purposes, and shall be reasonably shielded from abutting properties. Lighting of the solar photovoltaic installation shall be directed downward and inward and shall incorporate full cut off fixtures to reduce light pollution.

26.8.2 Signage

Signs shall comply with Section 13 of this Ordinance. A sign consistent with Section 13 shall be required to identify the owner and provide a 24-hour emergency contact phone number shall be made visible from a right of way where the property has frontage. Solar photovoltaic installations shall not be used for displaying any advertising except for reasonable identification of the manufacturer or operator of the solar photovoltaic installation.

26.8.3 Utilities

Reasonable efforts, as determined by the City Council during site plan review, shall be made to place all utility connections from the solar photovoltaic installation underground, depending on appropriate soil conditions, shape, and topography of the site and any requirements of the utility provider. Electrical transformers for utility interconnections may be above ground if required by the utility provider.

26.9 Safety and Environmental Standards

26.9.1 Emergency Services: The solar photovoltaic installation owner or operator shall provide a copy of the project summary, electrical schematic, and site plan to the Fire Chief. Upon request the owner or operator shall cooperate with local emergency services in developing an emergency response plan. All means of shutting down the solar photovoltaic installation shall be clearly marked. The owner or operator shall identify a responsible person for public inquiries throughout the life of the installation.

26.9.2 Land Clearing, Soil Erosion and Habitat Impacts: Clearing of natural vegetation shall be limited to what is necessary for the construction, operation and maintenance of the large – scale ground-mounted solar photovoltaic installation or otherwise prescribed by applicable laws, regulations, and bylaws.

26.9.3 The approval of an application shall neither constitute the granting of an easement to sunlight over neighboring property nor a right to solar access.

26.10 Monitoring and Maintenance

26.10.1 Solar Photovoltaic Installation Conditions: The solar photovoltaic installation owner or operator shall maintain the facility in good condition. Maintenance shall include, but not be limited to, painting, structural repairs, and integrity of security measures. Site access shall be maintained to a level acceptable to the Fire Chief. The owner or operator shall be responsible for the cost of maintaining the solar photovoltaic installation and any access road(s), unless accepted as a public way.

26.10.2 Modifications: All material modifications to a solar photovoltaic installation made after issuance of the required building permit shall require approval by the City Council.

26.11 Abandonment or Decommissioning

26.11.1 Removal Requirements: Any solar photovoltaic installation which has reached the end of its useful life or has been abandoned consistent with Section 26.13.2 of this ordinance shall be removed. The owner or operator shall physically remove the installation no more than one hundred and fifty (150) days after the date of discontinued operations. The owner or operator shall notify the Building Commissioner and City Council by certified mail of the proposed date of discontinued operations and plans for removal. Decommissioning shall consist of:

(a) Physical removal of all solar photovoltaic installations, structures, equipment, security barriers and transmission lines from the site;
(b) Disposal of all solid and hazardous waste in accordance with local, state, and federal waste disposal regulations.
(c) Stabilization or re-vegetation of the site as necessary to minimize erosion. The City Council may allow the owner or operator to leave landscaping or designated below-grade foundations in order to minimize erosion and disruption to vegetation.

26.11.2 Abandonment: Absent notice of a proposed date of decommissioning or written notice of extenuating circumstances, the solar photovoltaic installation shall be considered abandoned when it fails to operate for more than one (1) year without the written consent of the City Council. If the owner or operator of a solar photovoltaic installation fails to remove the installation in accordance with the requirements of this Section within one hundred and fifty (150) days of abandonment or the proposed date of decommissioning, the City may enter the property and physically remove the installation.

26.11.3 Financial Surety: Proponents of large-scale ground-mounted solar photovoltaic projects shall provide a form of surety, either through escrow account, bond or otherwise, to cover the cost of removal in the event the City must remove the installation and remediate the landscape, in an amount and form determined to be reasonable by the City Council, but in no event to exceed more than one hundred and twenty five (125) percent of the cost of removal and compliance with the additional requirements set forth herein, as determined by the project proponent. Such surety will not be required for municipally- or state-owned facilities. The project proponent shall submit a fully inclusive estimate of the costs associated with removal, prepared by a qualified engineer, which shall be reviewed and verified by

the City Engineer. The amount shall include a mechanism for calculating increased removal costs due to inflation.

(Added 9/8/2011; amended 3/29/2016)

# SECTION 27

# CONVERSION OF HOUSES OF WORSHIP

27.1 Purpose of District

1. To allow for the reuse of historic houses of worship deemed Significant Buildings or Structures, as defined by the Woburn Municipal Code, in a manner that will promote economic development and provide housing in the community;

2. To encourage the preservation of houses of worship deemed to be Significant Buildings or Structures through adaptive reuse for residential purposes;

3. To provide housing for residents 55 years of age or older; and

4. To provide an alternative to traditional land subdivision in order to minimize the visual impact(s) of redevelopment and reuse on abutting properties.

27.2 Scope of Authority

A special permit may be issued for the conversion of a House of Worship on lots in the R-2 Zoning District which (1) contain a House of Worship that has been deemed to be a Significant Building or Structure by the Woburn Historical Commission using the criteria listed in Title 15, Article V, Section 15-16 of the Woburn Municipal Code, and which Significant Building or Structure was used as a house of worship within five (5) years of the date of application for a special permit under this Section, and (2) the lot has not been subdivided or reduced in size or otherwise developed for any other purpose subsequent to 1/1/2015.

27.3 Uses By Right

1. Those uses permitted by right in the underlying zoning district.

27.4 Uses by Special Permit

A Special Permit shall be required from the Woburn City Council for the following use:

1. Multi-family dwellings located entirely within the House of Worship that has been deemed to be a Significant Building or Structure by the Woburn Historical Commission as provided herein.

27.5 Dimensional and Density Regulations

Dimensional and density regulations for the "Conversion of Houses of Worship" District shall be as follows provided, however, that the City Council may grant a Special Permit to authorize relief from the existing dimensional regulations so long as such relief does not allow for additional residential units or an increase in the height of the existing structure or the footprint except to address ADA compliance.

1. Maximum Permitted Density: 1.5 dwelling units for every 1,000 square feet of the House of Worship's first floor gross floor area.

2. Dimensional Regulations: For purposes of this Section 27, the existing House of Worship structure may be converted to a multi-family dwelling using its existing setbacks and ground coverage.

3. Maximum Building Height

   a. No greater than the existing Structure not including appurtenant roof structures such as chimneys, service equipment, spires, flag poles and the like.

27.6 Off-Street Parking Requirements

1. At a minimum, at least 2 off street parking spaces per unit shall be provided in accordance with Section 8 of the Woburn Zoning Ordinance entitled Off Street Parking and Loading Facilities Regulations.

27.7 Required Additional Findings for Conversion of Houses of Worship

In granting a Special Permit under Section 27, the City Council must make the following additional findings and conditions:

1. That the building or structure proposed for conversion to residential use has been deemed by the Woburn Historical Commission to be a "Significant Building or Structure". In making this finding, the Woburn Historical Commission shall use the criteria outlined in Title 15, Article V, Section 15-16 of the Woburn Municipal Code;
2. That the building or structure proposed for conversion to residential shall be restored to its' original historic character and preserved from an historic or architectural perspective in perpetuity;
3. That conversion of the building or structure to residential use facilitates preservation or improvement of the existing character of abutting properties and the district generally;

4. That the exterior design of the building shall not be substantially altered so as to change the character and architecture of the original design;
5. The existing building footprint shall not be increased except to the extent that alterations are necessary to comply with the Americans With Disabilities Act;
6. There shall be adequate provision for container(s) for collection and disposal of refuse;
7. Residents fifty-five (55) years of Age and Older:
   a. At least fifty (50%) percent of the units shall be age restricted and occupied by at least one person who is fifty-five years of age or older.
   b. Prior to the issuance of a Special Permit under this Section 27, a deed, restrictive covenant or other recorded instrument showing the applicant to be the owner of the land to be designated as a Multiple Family Dwelling with fifty (50%) percent of the units restricted for persons 55 years of age or older shall be reviewed by the City Solicitor and approved by the City Council. It shall be a condition of any Special Permit granted hereunder that said Deed or other recorded instrument shall be recorded at the Middlesex County South District Registry of Deeds prior to the issuance of the Landowner's Notice of Special Permit Decision by the City Clerk's office.
8. The lot shall not be subdivided or reduced in size or otherwise developed for any other purpose subsequent to 1/1/2015.

(Added 1/22/2015)

[This page intentionally left blank.]

# SECTION 28

# TECHNOLOGY AND BUSINESS MIXED USE OVERLAY DISTRICT (TBOD)

28.1 Purpose and Objectives of District

The purpose of the Technology and Business Mixed Use Overlay District (TBOD or District) is to encourage the redevelopment of vacant or underutilized properties and former manufacturing sites into mixed use projects that:

1. Promote the health, safety, and general welfare of the community by encouraging the redevelopment of vacant, underutilized or decommissioned facilities and sites into productive use;
2. Promote the health, safety and general welfare of the community by encouraging uses and site development that minimizes the amount of impervious paved parking areas through the use of shared parking lots and driveway curb cuts, and improves air quality by reducing traffic congestion and automobile trips;
3. Consist primarily of research and development and/or office space with associated accessory light manufacturing and retail uses;
4. Provide significant employment opportunities for residents of Woburn and nearby communities at salaries above minimum wage;
5. Have limited residential development that, if included, is designed and intended to complement the commercial uses by comprising no more than an accessory, supporting role to the primary commercial uses; and
6. Are appropriate in scale and located in an area that provides proximate access to major highways and to public transportation.

(amended 7/30/2019)

28.2 Establishment and Applicability

This District may only be applied to parcels shown on Woburn Assessors' Maps as Map #54, Block #5, Lot #4; Map #54, Block #5, Lot 1; and Map #62, Block #1, Lot #29. The TBOD must contain a minimum of 50 acres, but may be subdivided into smaller lots. (amended 7/30/2019)

1. For the purposes of this section, the TBOD shall be superimposed on the other districts existing at the time that any land in any said underlying district is also included in the TBOD.
2. For the purposes of the Zoning Ordinance, a TBOD may include any use set forth in Sections 28.6.A and 28.6.B, below, which uses may be commingled

into a single structure with other eligible uses or may be located in separate structures on the site subject to any restrictions and/or limitations set forth in the Development Agreement described in Section 28.4.5 below. (amended 7/30/2019)

28.3 Authority of Permit Granting Authority

The City Council shall be the Permit Granting Authority for both Special Permits and Site Plan Review approval where applicable. The City Council may elect to vary the dimensional and parking requirements of this Section by Special Permit if, in its opinion, such change shall result in an improved project and will not nullify or substantially derogate from the intent or purpose and objectives of this section. This authority continues subsequent to occupancy.

28.4 Master Concept Plan

The property owner/developer of any TBOD Mixed Use Development shall, simultaneously with a request to rezone property to a proposed TBOD, file the following with the City Council for approval:

1. A Master Concept Plan ("Master Plan") which shall in a general manner show:
    1. The location and areas of proposed development;
    2. Proposed open space (usable or natural);
    3. Proposed site access curb cuts public/private ways; and
    4. Proposed building "envelope(s)" where construction is anticipated to occur (excluding internal site driveways).
2. A table showing approximate acres and calculations of the following:
    1. Total land area of each development area (building envelope area);
    2. Total development limitations, if any, of uses in any developable area;
    3. Total maximum development (gross square footage/use limitations); and
    4. Approximate number of parking spaces for the entire TBOD.
3. The Master Plan shall be approved by a two-thirds vote of the City Council at the time of rezoning and shall thereafter become the general development plan governing development at the TBOD. The Master Plan may be amended from time to time by a two-thirds vote of the City Council by application from the property owner/developer to reflect changing development conditions.
4. Upon approval of the Master Concept Plan or amendment thereto by the City Council, the development of all parcels within the TBOD shall be in accordance with the approved Master Concept Plan. In the event that individual parcels comprising the TBOD are under the ownership of different entities, each such entity shall be permitted to seek the approval of a modification to the Master Concept Plan and Development Agreement as it

applies to each such parcel. Similarly, the City Council may require changes to a previously-approved Master Concept Plan and/or Development Agreement as conditions for approving subsequent Special Permit(s) or granting subsequent Site Plan Review(s); provided that, (a) with respect to any previously-approved Master Concept Plan, only to the extent reasonably necessary to align such Master Concept Plan with material changes to the design and program of the parcel(s) subject to such Special Permit(s) or Site Plan Review(s), and (b) with respect to any previously-approved Development Agreement, (i) only with respect to the obligations of the developer of the parcel(s) subject to such Special Permit(s) or Site Plan Review(s), and (ii) only to the extent reasonably necessary to align such Development Agreement with material changes to the anticipated impacts of the development of such parcel(s). (amended 7/30/2019)

5. Projects in a TBOD shall not be subject to the provisions of Section 18 of the Woburn Zoning Ordinance entitled "Development Impact Mitigation", in recognition of the requirement for a Development Agreement.

   A Development Agreement in recordable form binding upon the developer/property owner. The Development Agreement shall serve in lieu of a Development Impact Statement and shall be approved by a two-thirds vote of the City Council prior to the issuance of the first Special Permit or Site Plan Review approval for development within the TBOD, which shall contain, without limitation:

   (1) Required mitigation (including traffic demand management initiatives), to address the impacts arising out of the use and occupancy of the proposed project, or if at the time of execution such impacts are not known, the methodology for assessing and addressing such impacts as the development of the TBOD premises.
   (2) Restrictions on development areas and such other development limitations as may be agreed upon.
   (3) Proposed phasing of the development of the TBOD.
   (4) Obligations with respect to pedestrian and vehicular interconnectivity within the TBOD to facilitate pedestrian access and parking efficiencies.
   (5) The authority of the City Council to retain the necessary professionals to assist in their review of development applications. The Development Agreement shall govern the implementation of the Master Plan and development at the TBOD. To facilitate the development of individual parcels comprising the TBOD the Development Agreement may include, wetland limitations, phase development provisions and obligations applicable to individual parcels."

   (amended 7/30/2019)

28.5 Exclusivity/Control

Except as specifically provided herein, uses and provisions of the Zoning Ordinance relating to the underlying zoning district not otherwise impacted by this Section 28 shall continue to remain in full force and effect with the exception of 5.2.1.4 and, provided further that the City Council shall in all cases be the Special Permit Granting and Site Plan Approval Authority, as applicable. Notwithstanding the foregoing, this Section (§28) of the Zoning Ordinance exclusively controls the establishment, development, and design of any development undertaken at any TBOD and supersedes any other provision of the Zoning Ordinance except Section 9 (Floodway and Flood Plain Districts). If any activity requires one or more Special Permits under said Section 9, a special permit application may be submitted to and considered by the City Council as the sole Special Permit Granting Authority concurrently with any Special Permit or Site Plan Review application submitted pursuant to Section 28. In the event of any conflict between the provisions of this Section and any other provision of the Zoning Ordinance, the provisions of this Section shall govern and control. (amended 7/30/2019)

28.6 Uses

1. Uses Allowed By Right with Site Plan Review

1. Business, professional and general offices;
2. Advanced Manufacturing;
3. Research and testing laboratory including vivarium use;
4. Manufacturing in the fields of biotechnology, medical, pharmaceutical, physical, biological and behavioral sciences and technology, environmental science, toxicology, genetic engineering, including but not limited to, comparative medicine, bioengineering, cell biology, human and animal nutrition, including production of equipment, apparatus, machines and devices for research, development, manufacturing and advance and practical application in any such field or area, and including, office, administrative support facilities related to any of the foregoing activities. All development proposals shall comply with applicable Federal, State and local laws, regulations and ordinances including, without limitation, regulations and ordinances governing air pollution, water pollution control, noise and illumination;
5. Hotels or inns;
6. Mixed Use Hotel/Restaurant;
7. Retail and service uses in connection with the operation of a hotel or inn that are located within the hotel structure;
8. Biomedical facilities defined by the National Institute of Health as a Biolevel-1 (BL-1) or Biolevel-2 (BL-2);

9. Child care and adult day care centers;
10. Medical and dental offices dedicated to general outpatient care and diagnosis, subject to additional off-street parking requirements in Section 28.8;
11. Residential units provided that the total number of residential units shall not exceed 150 units of which there shall be a maximum of 112 apartments (including Congregate Elderly Housing units located in garden apartment and/or elevator apartment buildings) with the remainder being townhouses, and provided that at least 15% of the non-age restricted units are affordable as defined by M.G.L. Chapter 40B Section 20, and provided that certificates of occupancy for all market-rate residential units in a building must be obtained proportionately with certificates of occupancy for any affordable residential units in such building;
12. Retail and personal service establishments, full service restaurants and fast food restaurants, provided (a) the total gross floor area of all such establishments permitted in the entire District does not exceed 60,000 square feet; (b) that only one establishment may exceed 10,000 square feet in gross floor area and be no more than 20,000 square feet in gross floor area, and (c) that the one (1) retail establishment exceeding 10,000 square feet in gross floor area shall be a grocery store;
13. Financial institutions;
14. Free standing automated teller machines (ATMs), except no other type of drive-up customer service facility shall be permitted;
15. Business sales and business service establishments;
16. Physical fitness training and recreational facilities that are accessory and incidental to either (a) business(es) in a permitted office or manufacturing building and which facilities are open to and used only by employees of the business(es) of the building in which it is located or (b) accessory and incidental to a permitted residential development and which facilities are open to and used only by the tenants of the residential development in which it is located;
17. Municipal uses;
18. Essential public services;
19. Accessory uses normally incidental to a permitted use including high hazard and other uses accessory to a permitted principal use;
20. Parking facilities below grade; and
21. Overnight parking of vehicles associated with business operations, provided that one additional on-site parking space is provided for each such vehicle.

(amended 7/30/2019)

2. Uses Allowed By Special Permit with Site Plan Review

1. Retail, personal service establishment(s), full-service and fast-food restaurants and physical training and recreational facilities that are not accessory and incidental to either (a) business(es) in a permitted office or manufacturing building and which facilities are open to and used only by employees of the building in which it is located or, (b) to a permitted residential development and which facilities are used only by the tenants of the residential development in which it is located, provided:
   (i) The cumulative total gross floor area of all such establishments authorized in the entire District under 28.6.2 (ii)(a), (ii)(b), and (ii)(c) below shall not exceed a maximum of 250,000 square feet;
   (ii) In order to avoid having multiple large establishments in the District, the following limitations shall apply:
      (a) There shall be no more than two establishments in the District which exceed 20,000 square feet of gross floor area and are no more than 50,000 square feet of gross floor area, one of which shall be a grocery store; and
      (b) In addition to the establishments permitted in ii(a) above, a physical training and recreational facility shall also be allowed provided the total gross floor area of such facility is no more than 80,000 square feet.
      (c) All other establishments must contain less than 20,000 square feet of gross floor area.
2. Residential units provided that the total number of residential units shall not exceed 300 of which there shall be a maximum of 225 apartments (including Congregate Elderly Housing units located in garden apartment and/or elevator apartment buildings)with the remainder being townhouses and provided that at least 15% of the non-age restricted units are affordable as defined by M.G.L. Chapter 40B Section 20, and that no more than 104 Congregate Elderly Housing units shall be allowed, and provided that certificates of occupancy for all market-rate residential units in a building must be obtained proportionately with certificates of occupancy for any affordable residential units in such building;
3. Wireless communication links, commercial radio or television transmission antenna(e);
4. Parking facilities above grade;
5. Pet Care Facilities;
6. Printing and publishing;
7. Accessory storage or parking of storage container or storage trailer;
8. Accessory Diagnostic Imaging Trailer.
9. Hospital, Extended Care Facility (added 7/3/2018)

(amended 7/30/2019)

3. Uses Not Permitted

1. Wholesale or retail sales of vehicles of any kind;
2. Heavy Manufacturing; and
3. Any use not expressly authorized by this Section.

28.7 <u>Density and Dimensional Regulations</u>

1. General Provisions

1. The maximum building height of 35 feet within 150 feet of a Residential 1 (R-1), Residential 2 (R-2) or Residential-3 (R-3) zoning district in the City of Woburn may be varied by Special Permit, in accordance with Footnote 8 to Section 6.1, Table of Dimensional Regulations.

2. Parking facilities contained within a building shall be included in the calculation of a building's height, notwithstanding the definition of HEIGHT

   OF A BUILDING in Section 2 and the provisions of Section 6.1, Table of Dimensional Requirements.

3. Structures erected on a building and not used for human occupancy, such as but not limited to, air and exhaust equipment, chimneys, heating-ventilating or air-conditioning equipment, solar or photovoltaic panels, elevator housings, antennae, skylights, cupolas, spires, mechanical and acoustical screening and the like ("rooftop structures") may exceed the maximum height of a building in feet provided no part of the rooftop structure(s) is more than 25 feet higher than the maximum permitted height of the building and the total horizontal coverage of such rooftop structures on the building does not exceed 60%, with the exception of an aggregate area not to exceed three percent of the total roof area which shall be allowed to have rooftop structures which extend no more than 35 feet above the roof line.

4. Except with respect to maximum height, the specific dimensional requirements of Section 28.7.2 below shall apply only to the District as a whole and not to individual lots. (amended 7/30/2019)

5. The Minimum Street Frontage requirement set forth in Section 28.7.2 below may be satisfied by the aggregate Frontage of any non-contiguous parcels within the District. (added 7/30/2019)

2. Specific Requirements

| | |
|---|---|
| 1. Minimum District Size: | 50 acres |
| 2. Minimum Street Frontage: | 100 feet |
| 3. Minimum Landscaped Useable Open Space: | 25% |
| 4. Minimum Front Yard Setback: | 25 feet |
| 5. Minimum Side Yard Setback: | 30 feet |
| 6. Minimum Rear Yard Setback: | 25 feet |
| 7. Maximum Building Height: | 80 feet |
| 8. Maximum Building Height within 150' of a residential zoning district on the Zoning Map: | 35 feet |

(amended 7/30/2019)

28.8 Off-Street Parking Requirements

1. Off-street parking requirements shall be as set forth in Section 8 of this Zoning Ordinance entitled Off Street Parking and Loading Facilities Regulations, except as noted in Section 28.8.2. below.

2. Medical and dental offices shall provide parking at the ratio of one space for every 200 sq. ft. of net floor area.

3. The minimum pavement width for any road, driveway or access aisle shall be 20 feet for one-way traffic and 24 feet for two-way traffic.

4. Notwithstanding anything to the contrary in this Section 28, the use of shared parking to fulfill parking demands that occur at different times of day is strongly encouraged. The minimum parking requirements in this Section 28.8 may be reduced by the City Council through Site Plan Review if the applicant can demonstrate that shared spaces will meet parking demands by using acceptable methodologies (e.g. the Urban Land Institute Shared Parking Report, ITE Shared Parking Guidelines, or other approved studies). (added 7/30/2019)

28.9 Design Standards

1. All utility and site construction details shall conform to the standards of the City of Woburn's Zoning Code, where applicable, and in the case of a subdivision the Woburn Planning Board's Land Subdivision Rules and Regulations, unless otherwise waived thereunder. (amended 7/30/2019)

28.10 Sign Regulations

1. Signage in a TBOD shall be as authorized by the City Council via an approved Site Plan or Special Permit Plan of Record.

28.11 Permitting Requirements

1. All uses listed as being allowed by right with Site Plan Review shall obtain Site Plan Review from the City Council in accordance with the requirements of this Section. Site Plan Review approval shall require a majority affirmative vote of the City Council.

2. All uses listed as being allowed by Special Permit with Site Plan Review shall obtain both from the City Council in accordance with the requirements of this Section. In cases where both a Special Permit and Site Plan Review are required, the applications shall be processed concurrently. Approval of a Special Permit with Site Plan Review shall require a two-thirds vote of the City Council.

3. An application filed under this Section may be filed coincidental with an application for variance(s), and/or during an appeal period associated with a variance that has been granted, notwithstanding the provisions of Section 11.3.

4. An application package for either Site Plan Review or a Special Permit with Site Plan Review in accordance with this Section shall contain all of the material listed in 28.12 and 28.13 and shall be delivered to the Woburn City Clerk at City Hall during regular business hours or to the City Council at a regular or special meeting thereof.

5. An application that fails to meet the requirements of Sections 28.12 and 28.13 shall be deemed incomplete and shall not be assigned for public hearing. In the event the City Council (or City Clerk on behalf of the City Council) deems an application incomplete or inadequate to provide a proper understanding of the matter, the applicant shall be advised of same and given an opportunity to submit additional information, revise the plan, or substitute new one(s). An application may be dismissed for failure to comply with these requirements within 30 days after notice of such failure. The statutory time frames of M.G.L. Chapter 40A Section 11 and for Site Plan Review shall not start until an application is deemed complete.

6. The City Council may authorize/waive the following when granting Site Plan Review or approving a Special Permit with Site Plan Review under this Section:

    1. Section 5.2.1.4. (access to the buildable portion of a lot)
    2. Section 5.2.4 (use of land in different districts for access)

7. The City Council shall not be authorized to grant a Special Permit to permit the substitution of compact car parking stalls for more than ten percent of the required number of parking spaces (Section 8.2.3). (amended 7/30/2019)

8. The City Council may impose conditions on any Special Permit or Site Plan Review decision for manufacturing uses that require (a) all resulting odors, gases and particulate matter from proposed operations be effectively contained on the property or so disposed of so as not to have an adverse impact on surrounding outside air quality; (b) all noise, vibration, flashing or lighting (which is continuous and not the result of short term operation of emergency generators or other equipment) from manufacturing operations shall be perceptible normally without instruments either at the boundary line of the property adjacent to a residential zoning district on the Zoning Map or at any point within the nearest occupied residential lot within the City of Woburn more than 150 feet from the location of such activity on the property, whichever is closer to the intended use. (amended 7/30/2019)

28.12 Application Requirements

A complete application package for either Site Plan Review or a Special Permit with Site Plan Review shall contain all of the following:

1. 24 copies of a Technology and Business District Site Plan Review/Special Permit with Site Plan Review Application and two copies of an Application Checklist for Technology and Business Mixed Use District Development, both of which are provided in Section 16 of the Zoning Ordinance (Illustration Addendum);

2. Two copies of a deed certifying ownership and, where applicable, a statement certifying prospective ownership of the premises involved as well as evidence that the applicant has permission of the owner to make such application if the applicant is not the owner;

3. Legal description, street address(es) and/or other description of the location of the premises involved;

4. Two sets of mailing labels showing the names and addresses of all “parties in interest” as defined by M.G.L. Chapter 40A Section 11 (this list must be certified by the Woburn Assessors’ Office);

5. 24 copies of plans meeting all of the requirements of Section 22-10, at a minimum size of 24”x36”, drawn to scale and dimensionally correct. Required plans are all those applicable to the establishment of the findings and conditions specified in Section 28.11.5 below. Such plans shall include

6. building floor and façade plans, plot plans showing existing conditions and lot lines, traffic circulation, landscaping and topographical plans.

7. Evidence as required to show the effects of the proposed project upon traffic, drainage, road capacity and city utilities, including studies such as traffic generation and parking utilization analyses;

8. Evidence as to the status of all permit applications to/decisions from other City, State or Federal agencies concerning the project including the Woburn Board of Appeals, Woburn Conservation Commission and MassDEP;

9. Any information not listed herein but which is required in order to properly consider all of the requested special permit(s) and waiver(s);

9. A filing fee of $1,500.00; and

10. An electronic copy of the entire application package (including all documents and plans) in Word and pdf format.

28.13 Plan Content Requirements

Plans submitted as part of an application for Site Plan Review or Special Permit with Site Plan Review in accordance with this Section shall contain the following information:

1. A locus map drawn at a scale of 1” = 800’ that shows the subject property and all zoning and historic district boundary lines that lie within the locus;

2. The location and name of all streets in the immediate vicinity of the proposed project with a notation as to whether the street is a public or privately-owned right-of-way;

3. The location and dimensions of all existing and proposed buildings on the site and the general location of buildings on abutting properties;

4. Existing and proposed setbacks of all existing and proposed buildings;

5. Existing and proposed contour elevations in two foot increments;

6. A table calculating the amount of parking required for all existing and proposed uses, and the location, size and type of parking spaces, parking areas, loading and unloading and service areas;

7. Information sufficient to demonstrate that satisfactory arrangements will be made to facilitate vehicular and pedestrian movement to, from and within the site including information on driveways, parking lot aisles, walkways, and sidewalks;

8. Information on the location, size, and capacity of existing and proposed utilities which will service the project (water and sewer service, hydrant locations, drainage, electrical, cable, etc.);

9. Information on the method of surface and subsurface drainage disposal;

10. Location, size, type and number of existing and proposed landscaping features, including trees to be retained or removed;

11. Information on the type, number, and intensity of lighting;

12. A table displaying all applicable use and dimensional regulations and corresponding specifications of the proposal;

13. Provisions for refuse removal and snow removal/storage;

14. Any additional information the City Council deems necessary to evaluate the proposed project as it relates to any of the special permit or waiver requests, surrounding areas, anticipated traffic and public safety issues and the intent of the Zoning Ordinance.

28.14 Procedures for Approval

1. A Site Plan Review or Special Permit with Site Plan Review application for land in a Technology and Business District shall include requests for any special permit(s) and/or waiver(s) that may be required by the Woburn Zoning Ordinance. Applications will be processed by the City Council in accordance with the notification procedures and time line outlined in M.G.L. Chapter 40A Section 11.

2. Within three business days of receipt of an application for Site Plan Review or Special Permit with Site Plan Review under this Section, the City Clerk shall distribute eight copies of the application to the Planning Board and one copy each to the City Engineer, Building Commissioner, Conservation Commission, Board of Health, and Police and Fire Departments for review and comment. The City Council may forward copies of the application to other City agents and agencies as well, for review.

3. City agents and agencies to whom an application has been referred shall transmit comments and recommendations to the City Council within 60 days of receipt of the application. Failure to provide comments shall be deemed lack of an objection.

4. The City Council shall not issue a Special Permit unless it finds the proposal will meet the following conditions:

    1. The ways providing vehicular and pedestrian access have the capacity to provide safe ingress and egress to property and proposed structures thereon and uses thereof with particular reference to automotive and pedestrian safety and convenience, traffic flow and control and emergency access in case of fire, emergency or catastrophe.

    2. Adequate water, sewerage and drainage facilities exist or will exist to service the proposed use.

    3. Adequate off-street parking and loading areas have been provided where required and will not result in undue noise, glare, or odor effects on adjoining properties or on properties generally in the district.

    4. Satisfactory provision has been made for snow storage/removal to ensure safety and for refuse collection, disposal and service areas to minimize negative impacts on adjacent uses.

    5. Exterior lighting has been designed to minimize glare and any negative impacts on abutting roadways and properties and to be compatible and in harmony with other properties in the immediate area.

    6. Appropriate yards and other open space and landscaping have been provided as required and reasonable steps have been taken to insure the privacy of adjacent existing uses.

    7. The proposed use is generally compatible in scale and character with adjacent properties and other properties in the district.

    8. The proposed use(s) or structure(s) will not detract from the general purposes of this ordinance and either comply in all respects with the provisions of the Woburn Zoning Ordinance or has obtained relief (i.e. waiver, special permit or variance) as may be required.

    9. The proposal incorporates additional conditions and requirements as the City Council finds reasonably appropriate to safeguard the neighborhood or otherwise serve the purposes of this Ordinance, including but not

limited to the following: Front, side or rear yards greater than the minimum required by this ordinance; requirements for screening, buffers, planting strips, fences or walls; modification of proposed exterior facades of the structure; limitation upon the size, number of occupants, method and time of operation, or extent of facilities; regulation of the number, size and location of drives, access ways, or other traffic features, and off-street parking or loading, or other special features beyond the minimum required in the ordinance.

5. When approving an application under this Section the City Council may attach all reasonable and necessary conditions to ensure that uses of surrounding property are adequately safeguarded and that the purpose of both the Zoning Ordinance and the Technology and Business Mixed Use Overlay District (TBOD) are maintained.

28.15 Validity of Decision

1. No Special Permit granted under this Section shall be valid until it is recorded at the Middlesex Registry of Deeds and a copy of the approved Plan of Record is filed with the Building Commissioner.

2. Approval of a Site Plan or a Special Permit with Site Plan Review shall remain valid and shall run with the land indefinitely, provided that a valid building permit has been issued within two years after the decision is issued, which time shall be extended by the time required to adjudicate any appeal from such approval. This two year period may also be extended for a specific period of time by majority vote of the City Council if it finds the project proponent is actively pursuing other required permits for the project or that there is other good cause for the failure to commence building construction within the two year period. Requests for extensions must be filed with the City Council prior to the expiration of the two year period.

   If building construction has not commenced within two years after the decision is issued (or any City Council-approved extension of the two-year period), then Site Plan Review approval or a Special Permit with Site Plan Review shall be null and void, and no construction shall thereafter commence unless a new Site Plan Review or Special Permit with Site Plan Review is approved in accordance with the provisions of this Section

(Added 9/8/2016; amended numbering 12/8/2016)

# SECTION 29

# CONVERSION OF SIGNIFICANT HISTORIC BUILDING

29.1 Purpose of District

The purpose of this overlay district shall be to promote the preservation of significant historic buildings that are neighborhood and/or city landmarks that have outlived the purpose for which they were initially constructed, and which are at risk for deterioration or loss, thereby enhancing the community's appearance and extending its common architectural legacy for future generations. The intent of this overlay district shall be to enable such buildings to be adapted to new use(s) while exerting strict control over the preservation of exterior building and site features. This provision is designed to encourage the adaptive reuse of such buildings where such reuse would more effectively promote, preserve, and enhance the architectural character of the surrounding neighborhood than would demolition of these landmark buildings and subsequent redevelopment of the site using the provisions of the underlying zoning district building.

29.2 Scope of Authority

1. In all residential and mixed-use districts, any existing building as of December 4, 2018 containing gross floor area of 4,000 sq. ft. or greater of which at least fifty percent (50%) of the gross floor area was constructed prior to 1918 and which has been deemed to be a Significant Historic Building by the Woburn Historical Commission using the criteria listed in Title 15, Article V, Section 15-16 of the Woburn Municipal Code may, together with the original detached accessory structures, be altered so as to contain two (2) or more dwelling units by special permit granted by the City Council provided the conditions set forth herein are met the entire building, original and any additions, must be deemed to be a historically significant building by the Woburn Historical Commission. If in a Historic District as provided in Title 19 of the Municipal Code, a Certificate of Appropriateness shall be obtained from the Historic District Commission. Municipally-owned buildings, or Municipally-owned buildings that are under agreement to be sold for the purpose of development in accordance with this Section 29, or former Municipally-owned buildings were sold for the purpose of development in accordance with this Section 29, shall be exempt from the minimum gross floor area requirement.

29.3 Uses Allowed by Right

1. Those uses permitted by right in the underlying zoning district.

29.4 Uses Allowed by Special Permit

1. Dwelling units located entirely within the building that has been deemed to be a Significant Historic Building by the Woburn Historical Commission as provided herein.

2. An office use located entirely within the building that has been deemed to be a Significant Historic Building by the Woburn Historical Commission as provided herein that legally exists, even if nonconforming, as of the date of the Petition may be allowed to continue provided all of the following conditions are met (1) it is a preexisting legal use; (2) such preexisting legal use does not exceed 25% of the net floor area as defined in Section 2 of the Woburn Zoning Ordinances; (3) it is in existence as of December 4, 2018; (4) the space allocated to the office use is reduced as part of the Special Permit; and (5) the continued office use together with the additional residential use shall not substantially impact the comfort, privacy, quiet enjoyment, and standard of living of residents in the property and neighborhood. (added 4/2/2019)

29.5 Dimensional and Density Regulations

Dimensional regulations for the "Conversion of Significant Historic Building " shall be as follows provided, however, that the City Council may grant a Special Permit to authorize relief from some of the Dimensional Regulations set forth below so long as such relief does not allow an increase in the Maximum Building Height of the existing building or the footprint except to address ADA compliance; the addition of an exterior elevator shaft; or the addition of exterior stairwells; and porches/decks.

1. Dimensional Regulations: For purposes of this Section 29, the existing Significant Historic Building may be converted to a multi-family dwelling using the dimensions reflected in existing site conditions as of the date of adoption of this provision (December 4, 2018) including setbacks (building and parking); ground coverage; height; lot size; lot width; and landscaped useable open space. The City Council may grant relief from the setbacks, landscaped usable open space and building ground coverage regulations/requirements but may not grant additional relief for height, lot size or lot width. Municipally-owned buildings, or Municipally-owned buildings that are under agreement to be sold for the purpose of development in accordance with this Section 29, or former Municipally-

owned buildings that were sold for the purpose of development in accordance with this Section 29, shall be exempt from this requirement.

2. Existing buildings on lots which are lots of record as of the date of adoption of this amendment (December 4, 2018) that are deficient in frontage, area, or lot width may be converted under the terms of this Section without a variance, but existing buildings on lots which meet or exceed the minimum required frontage, area, or lot width may not be subdivided in a manner that creates additional building lot(s) or dwelling unit(s). For purposes of this section, “lots of record” are those as shown on the most recently recorded subdivision or so-called ANR plan filed at the Middlesex South Registry of Deeds. Municipally-owned buildings, or Municipally-owned buildings that are under agreement to be sold for the purpose of development in accordance with this Section 29, or former Municipally-owned buildings that were sold for the purpose of development in accordance with this Section 29, shall be exempt from this requirement.

3. Maximum Building Height

    a. For purposes of this Section 29, the Maximum Building Height is as is existing at each location of the building’s roof, it being the intent of this section to prohibit the upward expansion of certain portions of the building to match the highest point.

    b. The maximum building height shall be no greater than the existing Building, as set forth in subparagraph (a) supra, not including appurtenant roof structures such as chimneys, service equipment, elevator machinery, spires, flag poles and the like.

4. Maximum Permitted Residential Density: Twenty (20) units per acre. For any parcel less than one acre with a building that was used as a legal pre-existing nonconforming use as of December 4, 2018, the number of residential units shall be determined based upon the gross floor area of the building, and the ability to comply with the parking requirements set forth in Section 29.6, but in no event shall the number of residential units exceed fifteen (15) and there shall be at least 550 square feet of gross floor area per unit. Municipally-owned buildings, or Municipally-owned buildings that are under agreement to be sold for the purpose of development in accordance with this Section 29, or former Municipally-owned buildings that were sold for the purpose of development in accordance with this Section 29, shall be exempt from the maximum permitted density restriction. (amended 7/18/2019)

29.6 Off-Street Parking Requirements

1. For residential uses, off street parking shall be provided in accordance with the table below. When non-residential uses are permitted in the underlying district, off-street parking for non-residential uses shall be provided in accordance with Section 8.2.5. In all other respects, the provisions of Section 8 will apply to all parking spaces.

| Type of Unit | Minimum number of parking spaces per unit |
|---|---|
| Studio and 1 Bedroom | 2 spaces per unit |
| 2 Bedroom | 2 spaces per unit |
| 3+ Bedroom | 1 space per bedroom |

2. The City Council may require additional parking spaces to accommodate residents and/or guests on the site to minimize impact upon the neighborhood especially if there is sufficient area to accommodate additional parking spaces on site.

3. The City Council may grant a special permit to reduce the minimum number of required parking spaces per dwelling unit if (a) all proposed parking spaces on site are designed such that each vehicle may proceed to and from each parking space without requiring the moving of any other vehicle; (b) the City Council finds that the proposed project will not detract from the health, safety, and welfare of the occupants and owners of surrounding properties; and (c) the City Council finds that the reduced amount of on-site parking will accommodate the projected parking demands of the site, including employees, residents, visitors and deliveries.

4. Except as provided herein, all design and screening requirements for parking spaces and parking lots in Section 8 of the Woburn Zoning Ordinance apply. Relief from those requirements may be provided at the discretion of the City Council after consideration of all relevant factors including pre-existing conditions such as setbacks and alternative screening and landscaping.

29.7 Conditions

1. The exterior façade and design shall be maintained to the maximum extent possible and maintained in perpetuity by the execution and recordation of a Façade Preservation Restriction.
2. Except as otherwise provided herein, the original building area is not increased except for minor additions and alterations made to comply with the requirements of the Americans with Disabilities Act.

29.8 Required Additional Findings for Conversion of Significant Historic Building

In granting a Special Permit under Section 29, and in addition to the required findings set forth in Section 11.5 of the Woburn Zoning Ordinance, the City Council must make the following additional findings and conditions with respect to any Special Permit for Conversion of an Historic Building:

1. That the building proposed for conversion to residential use (or, in cases where non-residential is also permitted, to mixed-use) has been deemed by the Woburn Historical Commission to be a “Significant Historic Building”. In making this finding, the Woburn Historical Commission shall use the criteria outlined in Title 15, Article V, Section 15-16 of the Woburn Municipal Code;

2. That there is community value to retaining the building and history that it represents;

3. That the amount of usable open space existing on the site as of the date of adoption of this provision (December 4, 2018) shall remain the same unless the City Council specifically authorizes an exemption;

4. That the building proposed for conversion to residential (or to mixed use, in cases where non-residential uses are also permitted) shall be restored to its’ original historic character and preserved from a historic or architectural perspective in perpetuity via the execution and recordation of a Façade Preservation Restriction;

5. That conversion of the historic building to residential use or mixed use facilitates preservation or improvement of the existing character of the subject property, abutting properties and the district generally;

6. That the exterior design of the building shall not be substantially altered so as to change the character and architecture of the original design; and

7. There shall be adequate provision for screening of and container(s) for collection and disposal of refuse.

29.9 Procedure

1. Special Permit Applications pursuant to this section shall be subject to the procedures and conditions set forth in Section 11 of the Woburn Zoning Ordinance.

29.10 Application Requirements

1. An application package for Special Permit in accordance with this Section shall contain all of the material listed in 29.10 and 29.11 and shall be delivered to the office of the City Clerk at City Hall during regular business hours.

2. A complete application package for a Special Permit for Conversion of an Historic Building shall contain all of the following:

    1. Thirteen (13) copies of a Special Permit application;

    2. Two (2) copies of a deed certifying ownership and, where applicable, a statement certifying prospective ownership of the premises involved as well as evidence that the applicant has permission of the owner to make such application if the applicant is not the owner;

    3. Legal description, street address(es) and/or other description of the location of the premises involved;

    4. Two (2) sets of mailing labels showing the names and addresses of all "parties in interest" as defined by M.G.L. Chapter 40A Section 11 (this list must be certified by the Woburn Assessors' Office);

    5. Thirteen (13) copies of plans meeting all of the requirements of Section 29.11, at a minimum size of 24" x 36", drawn to scale and dimensionally correct. Required plans are all those applicable to the establishment of the findings and conditions specified in this Section. Such plans shall include building floor and façade plans, plot plans showing existing conditions and lot lines, traffic circulation, landscaping and topographical plans and shall be drawn by registered professionals in the respective trades.

    6. Evidence as required to show the effects of the proposed project upon traffic, drainage, road capacity, and city utilities including studies such as traffic generation and parking utilization analyses;

    7. Evidence as to the status of all permit applications to and decisions from other City, State, or Federal agencies concerning the project including the Woburn Board of Appeals, Woburn Conservation Commission, and MassDEP;

8. Any information not listed herein but which is required in order to properly consider all of the requested special permit(s) and any waiver(s);

9. A draft Façade Preservation Restriction in recordable form and which will be binding upon the developer/property owner as a condition of the Special Permit;

10. A filing fee of five hundred dollars ($500.00) of which two hundred dollars ($200.00) will be for advertising and three hundred dollars ($300.00) will be for an application fee;

11. An electronic copy of the entire application package (including all documents and plans) in Word and pdf format; and

12. Satisfactory evidence that at least fifty percent (50%) of the building's gross floor area was constructed prior to 1918.

29.11 Plan Content Requirements. Plans submitted as part of an application pursuant to this section shall contain the following information:

1. A locus map drawn at a scale of 1" = 800' that shows the subject property and all zoning and historic district boundary lines that lie within the locus;

2. The location and name of all streets in the immediate vicinity of the proposed project with a notation as to whether the street is a public or privately-owned right-of-way;

3. The location and dimensions of all existing buildings on the site and the general location of buildings on abutting properties;

4. Existing and proposed setbacks of all existing buildings;

5. Existing and proposed contour elevations in two foot increments;

6. A table calculating the amount of parking required for all existing and proposed uses, and the location, size and type of parking spaces, parking areas, loading and unloading and service areas;

7. Information sufficient to demonstrate that satisfactory arrangements will be made to facilitate vehicular and pedestrian movement to, from and within the site including information on driveways, parking lot aisles, walkways, and sidewalks;

8. Information on the location, size, and capacity of existing and proposed utilities which will service the project (water and sewer service, hydrant locations, drainage, electrical, cable, etc.);

9. Information on the method of surface and subsurface drainage disposal;

10. Location, size, type and number of existing and proposed landscaping features, including trees to be retained or removed;

11. Information on the type, number, and intensity of lighting;

12. A table displaying all applicable use and dimensional regulations and corresponding specifications of the proposal;

13. Provisions for refuse removal and snow removal/storage;

14. Architectural details of all existing building facades as well as any proposed changes/additions to the building facades; and including manufacturers' color codes for all exterior features; and

15. Any additional information the Special Permit Granting Authority deems necessary to evaluate the proposed project as it relates to any of the special permit or waiver requests, surrounding areas, anticipated traffic and public safety issues and the intent of the Zoning Ordinance.

(Added 12/6/2018)

**********

# SECTION 30

# SMART GROWTH OVERLAY DISTRICT(S)

30.1 General Regulations that apply to all Smart Growth Overlay Districts

1. Purposes **-** The purposes of the Smart Growth Overlay District (SGOD) are:

    1. To encourage smart growth in accordance with the purposes of G. L. Chapter 40R.
    2. To provide an opportunity for residential and mixed-use development within a distinctive, attractive and livable environment in the City of Woburn.
    3. To promote development and redevelopment in the City that is pedestrian friendly.
    4. To ensure high quality site planning, architecture, and landscape design that enhances the distinct visual character and identity of the City and provides an environment with safety, convenience and amenity.
    5. To provide for a diversified housing stock at a variety of costs within walking distance of services, employment opportunities and public transportation, including affordable housing and other housing types that meet the needs of the City's population.
    6. To generate positive tax revenue for the City to the extent consistent with Massachusetts General Law Chapter 40R, and to benefit from the financial incentives provided by M.G.L. c. 40R, while providing the opportunity for new business growth and additional local jobs.
    7. To promote efficient use of land and existing parking supply and limit the expansion of surface parking within the district by encouraging shared parking.
    8. To encourage adoption of energy efficient building practices and sustainable construction methods.

2. Definitions – The following definitions shall apply only to this Section 30. All terms shall be defined in accordance with the definitions established under the Governing Laws or this Section, or as set forth in the City Council's Regulations for the SGOD ("the SGOD Regulations"). Where, for readability or other reasons, the terms defined in Section 30.1.2 and the SGOD Regulations appear without capitalization, such use shall nevertheless have the same meaning as the capitalized term so defined in Section 30.1.2 or the SGOD Regulations, as applicable, unless it is obvious and appropriate based on the context that the common law definition applies. With respect to terms pertaining to any mandatory provisions, unless otherwise approved by DHCD

or defined by applicable state or federal law, common law definitions shall apply to all other terms not defined in Section 30.1.2 or the SGOD Regulations. To the extent that there is any conflict between the definitions in this Section 30.1.2 or the SGOD regulations and the Governing Laws, the terms of the Governing Laws shall govern.

ACCESSORY USE: The use of a structure or lot for a purpose incidental to a permitted principal use (or, in the case of mixed use projects, uses), permitted As-of-right, customarily found in connection therewith, located on the same lot as the principal use(s), and which does/do not in effect constitute conversion of the principal use(s) of the structure or lot to one not permitted.

ADMINISTERING AGENCY: The Woburn Housing Authority or other qualified housing entity designated by the City Council or DHCD, pursuant to Section 30.1.7 to review and implement the Affordable Housing requirements affecting Projects under Section 30.1.7.

AFFORDABLE HOMEOWNERSHIP UNIT: An Affordable Housing unit required to be sold to an Eligible Household.

AFFORDABLE HOUSING or AFFORDABLE UNIT(S): Housing that is affordable to and occupied by Eligible Households.

AFFORDABLE HOUSING RESTRICTION: A deed restriction of Affordable Housing meeting statutory requirements in M.G.L. Chapter 184, Section 31 and the requirements of Section 30.1.7 of this Ordinance.

AFFORDABLE RENTAL UNIT: An Affordable Housing unit required to be rented to an Eligible Household.

APPLICANT: The individual or entity that submits a Project for Plan Approval.

AREA-WIDE MEDIAN INCOME: The median income, adjusted for household size, as reported by the most recent information from, or calculated from regulations promulgated by, the United States Department of Housing and Urban Development (HUD).

AS-OF-RIGHT: A use allowed under the SGOD without recourse to a special permit, variance, zoning amendment, or other form of zoning relief. A Project that requires Plan Approval by the Woburn City Council pursuant to Sections 30.1.11 through 30.1.19 inclusive shall be considered an As-of-right Project (subject to review and approval by DHCD of any Municipal 40R regulations, guidelines, application forms, or other requirements applicable to review of

Projects by the Plan Approval Authority under this Ordinance and 760 CMR 59.00.).

AUDITORIUM, THEATER OR PLACE OF PUBLIC ASSEMBLY: A space designed and intended to enable an audience to hear and watch live or pre-taped performances.

AUTOMATIC TELLER MACHINE (ATM), FREESTANDING: A pedestrian-oriented mechanical device, not in proximity to a bank or other financial institution, which is accessed by an individual for the purpose of receiving cash from accounts and/or allows patrons to transact minor financial activities. ATMs for use by patrons in vehicles are to be considered Drive-up Customer Service Facilities.

BASEMENT: A portion of a building, partly underground, which has more than one-half (1/2) of its height (measured from finished floor to finished ceiling) above the average grade of the adjoining ground. A basement is not deemed a story unless its ceiling is six feet six inches (6.5 feet) or more above the finished grade.

BILLBOARD: A sign or freestanding sign that advertises a business, service, product, activity, commodity, entertainment or similar object or activity that is conducted, sold, or offered on a lot other than the lot on which the sign or freestanding sign is erected.

BUILDING: An independent structure resting on its foundations and designed for the shelter or housing of persons, animals, chattels, or property of any kind. The word “building” shall be construed, where the context requires, as though followed by the words “or part or parts thereof.”

BUILDING COMMISSIONER, ALSO KNOWN AS THE COMMISSIONER OF BUILDINGS: The Commissioner of Buildings of the City of Woburn, also known as the Building Commissioner, charged with the enforcement of this Zoning Ordinance.

CELLAR: A portion of a building, partly underground, which has less than one-half (1/2) of its height (measured from finished floor to finished ceiling) above the average grade of the adjoining ground. A cellar is not deemed a story.

CHILD CARE CENTER: Any facility for the commercial day care of four or more children.

CITY COUNCIL: City Council of the City of Woburn.

CONSUMER SERVICES: A barber shop or salon, dry cleaning (drop-off/pick-up only), laundry establishment associated with a residential use, photographer's shop or studio or similar business where service is provided directly on the premises.

DEPARTMENT OR DHCD: The Massachusetts Department of Housing and Community Development.

DESIGN STANDARDS: The provisions of Section 30.1.20 which are the design provisions that are applicable to all Projects within the SGOD.

DEVELOPMENT IMPACT TRAFFIC STANDARDS: Standards by which a Project shall be evaluated relative to its impact upon the City's traffic. The standards of Level of Service and Impacted Intersections shall be used to evaluate a project's impact on the City's traffic infrastructure.

DRIVE-UP CUSTOMER SERVICE FACILITY: A fast food restaurant, retail, commercial, or service use which allows customers to access sales or services directly from a motor vehicle or where the customer drives a motor vehicle onto the premises and to a window or mechanical device through or by which the customer is serviced without exiting the vehicle.

DRIVEWAY: An open space, located on a private lot, providing for access to a private garage or off-street parking space.

DWELLING, MULTI-FAMILY or MULTI-FAMILY OR MULTIFAMILY RESIDENTIAL: A dwelling which contains three (3) or more dwelling units attached or located in a single structure.

DWELLING UNIT: One (1) or more rooms arranged, intended or designed to be occupied by one (1) family/household and to provide complete facilities for living, sleeping and eating.

ELEVATION: Height relative to mean sea level.

ELIGIBLE HOUSEHOLD: An individual or household whose annual income is less than or equal to eighty percent (80%) of the area-wide median income as determined by the United States Department of Housing and Urban Development (HUD), adjusted for household size, with income computed using HUD's rules for attribution of income to assets.

ERECTED: The word erected shall include the word attached, built, constructed, reconstructed, altered, enlarged, moved, painted and posted.

ESSENTIAL SERVICES: The erection, construction, alteration, or maintenance, by public utilities or government agencies, of underground or overhead utilities and appurtenances including buildings necessary for the furnishing of adequate service for the benefit of public health, safety or general welfare by such public utilities or governmental agencies.

FINANCIAL INSTITUTION: A state or federally chartered bank, savings association, credit union, or industrial land company located in a building or portion thereof which provides for the custody, loan, exchange, or issue of money, the extension of credit, or facilitating the transmission of funds, and which may include accessory drive-up customer services facilities (including for accessory ATMs) on the same premises. This term does not include small loan businesses or check cashing facilities.

FLOOR AREA, GROSS: The sum of all areas of a building within the inside perimeter of the exterior faces of the walls. It includes all floors of a building, basements, cellars, attics, penthouses, unenclosed and closed-in porches, closets, ramps, floor space in accessory buildings or in the main building intended and designed for the parking of motor vehicles in order to meet the parking requirements of this Ordinance, and any floor space intended and designated for the operation and maintenance of the building, i.e. heating, air conditioning, ventilation, mechanical and electrical equipment, elevator machinery, elevator shafts, corridors, hallways, columns and stairwells. The floor area of a building, or portion thereof, not provided with surrounding exterior walls shall be the useable area under the horizontal projection of the roof or floor above.

FLOOR AREA, NET: The sum of all the floors of a building used for human occupancy, including basements, cellars, attics, and floor area of interior courts designed for human occupancy and used for such purpose, and as measured from the interior faces of the walls. It does not include cellars, basements, attics and unenclosed and closed-in porches not designed and/or used for human occupancy, closets, ramps, or any floor space in accessory buildings or in the main building intended and designed for the parking of motor vehicles in order to meet the parking requirements of this ordinance, or any floor space intended and designated for operation and maintenance of the building such as heating, ventilation, air conditioning, mechanical and electrical equipment, elevator machinery, elevator shafts, corridors, hallways, columns and stairwells.

FLOOR AREA RATIO (FAR): The ratio of the net floor area of the structure to the lot area.

FRONTAGE: The length of continuous linear feet of a lot which runs along a street. See also "LOT LINE, FRONT".

GOVERNING LAWS: M.G.L. Chapter 40R and 760 CMR 59.00.

GARAGE: A structure for the storage of motor vehicles.

GRADE: The rate or percent of change in elevation of the surface of the land as measured in feet of vertical change per one hundred (100) feet of horizontal distance.

HEALTH CLUB/FITNESS CENTER: A Health Club/Fitness Club shall mean a commercial establishment or use which operates a group fitness center, gym or recreational facility that may offer membership but is generally available to the public.

HEIGHT OF A BUILDING: The vertical distance measured from the average ground elevation around the exterior walls of the building, determined without regard to any attached accessory building, to the highest point of the roof surface in the case of a flat roof, and to the mean height between eaves and ridge in the case of a pitched roof except that the measurement of height shall not include appurtenant roof structures such as chimneys, service equipment and penthouses or spires, smokestacks, flag poles, aerials, roof-mounted energy systems, and the like.

HOME OCCUPATION OR OFFICE: The use of a portion of a dwelling as an office, studio, or workroom for occupation at home by a person residing on the premises and in connection with which there is kept no stock in trade nor commodity sold on the premises and which:

a. Is clearly incidental to and secondary to the use as a residence; and
b. Is a customary home occupation such as dressmaking, millinery, or preparing food for sale; or
c. Is an office of a resident physician, dentist, attorney at law, architect, engineer, real estate broker, insurance broker, teacher of not more than three (3) students, or member of other recognized professions; and
d. Shall have no exterior evidence of the home occupation or display or storage of materials other than permitted by this ordinance, including signs as permitted in Section 30.9; and
e. The equipment, facilities or conduct associated with the home occupation do not create undue or harmful noise, smoke, dust, odor, vibration, electrical interference, customer traffic, or unsightliness discernable from adjacent properties or such other interferences with the peaceable enjoyment of neighboring residents.

HOTEL: A business activity where rooms for temporary lodging are rented on a nightly or longer basis and whose facilities may include restaurants, pools, recreation amenities, conference and meeting rooms and similar types of accessory uses. All rooms shall be accessed from an internal hallway.

IMPACTED INTERSECTION(S): Any nearby intersection that will be negatively impacted by the increased traffic due to the proposed development.

LANDSCAPING: The planting and maintenance of live plants including trees, shrubs, ground cover, flowers, or other low-growing plants that are native or adaptable to the climactic conditions of the area. In addition, the term landscape may include some natural or manufactured materials including, but not limited to, reflecting pools, works of art, walkways, screens, walls, fences, benches and other types of street furniture. Landscaping material may also include, but is not limited to, other non-living durable materials such as rocks, pebbles, sand, brick pavers, and earthen mounds, but excluding pavement for vehicular use.

LEVEL OF SERVICE (LOS): A measure used to analyze the quality of traffic service by categorizing traffic flow and assigning quality levels of traffic based on performance measures such as speed. A project's Level of Service shall be determined according to criteria set forth by the Transportation Research Board of the National Research Council.

LOT: A single area of land in one ownership with definite boundaries, ascertainable by deed or recorded plan.

LOT AREA: Lot area shall be determined by an area within a lot including any area within said lot over which easements have been granted, provided that no area within a street shall be included in determining minimum lot area.

LOT, CORNER: A lot at the junction of and fronting on two (2) or more intersecting streets.

LOT, INTERIOR: A lot, other than a corner lot, with frontage on only one (1) street.

LOT LINE: A line which separates one (1) or more lots or a lot and a street.

LOT LINE, FRONT: The lines separating a lot from the right-of-way of a street. On a corner lot, the shorter street frontage shall be considered the front lot line unless otherwise specified by deed restriction.

LOT LINE, REAR: Any lot line which is not a front or side lot line.

LOT LINE, SIDE: Any line which separates a lot from another lot and which intersects a front lot line or which, if extended to a front lot line or its extension, would form an angle of greater than 45 degrees with the front lot line when measured on the side of the angle closest to the center of the lot.

LOT, THROUGH: A lot, other than a corner lot, the front and rear lot lines of which abut streets.

MIXED-USE RESIDENTIAL: A mix of any permitted commercial use including consumer services, child care center, retail, restaurant (full service and/or fast casual including rooftop dining), health club/fitness center, muscular therapy and/or office and multi-family uses (including Tenant Recreational Facilities) in one building or in separate buildings on one development lot or on adjacent lots with or without structured parking. Any building within the development can have a single use or any combination of permitted uses, except that a building with residential use(s) must also have permitted commercial uses.

MONITORING AGENT: A Monitoring Agent engaged by the Administering Agency to perform administration, monitoring and enforcement services regarding compliance of the Project with the terms of Affordability of the Affordable Units.

MUSCULAR THERAPY: Any establishment created for purpose of providing Massage Therapy by a duly licensed Massage Therapist.

OFFICE: A workplace used for the transaction of business or non-profit functions, excluding as principal uses manufacturing, retail construction, and warehousing and including but not limited to professional offices and offices that support or manage on-site or off-site manufacturing, retailing, construction, and warehousing, as well as research laboratories and other facilities in which research activities are conducted.

PHOTOVOLTAIC SYSTEM (also referred to as Photovoltaic Installation): An active solar energy system that converts solar energy directly into electricity.

PLAN APPROVAL: The Woburn City Council authorization for a proposed Project based on a finding of compliance with this article and the applicable Design Standards.

PLAN APPROVAL AUTHORITY (PAA): The Woburn City Council authorized under Section 30.1.11 to conduct the Plan Approval process for purposes of reviewing Project applications and issuing Plan Approval decisions within the SGOD.

PLANNING BOARD: Planning Board of the City of Woburn.

PREMISES: A lot, together with all buildings, structures, and uses thereon.

PRINCIPAL USE: The main or primary purpose(s) for which a structure or lot is designed, arranged, or intended, or for which they may be used, occupied, or maintained under this ordinance. The use of any other structure or land on the same lot and incidental or supplementary thereto and permitted under this ordinance shall be considered as accessory use.

PROJECT or DEVELOPMENT PROJECT: A Mixed-Use Residential development project undertaken within the SGOD in accordance with the requirements of this Section 30.

RATED NAMEPLATE CAPACITY: The maximum rated output of electric power production of the photovoltaic system in watts of Direct Current (DC).

RESIDENTIAL USE or RESIDENTIAL: A building or part of a building limited to Dwelling Units as defined herein above and parking that is accessory to the Dwelling Units.

RESTAURANT, FULL-SERVICE: Any building, room, space (including outdoor patios and Rooftop Dining) or portion thereof where food is sold for consumption on premises, customers are provided an individual menu, a restaurant employee serves the customers at the same table or counter at which items are consumed. A restaurant, full-service may provide “accessory” delivery service, take out service (Drive-Up Customer Service Facilities shall be prohibited) and related retail sales items.

RESTAURANT, FAST-CASUAL: Any building, room, space (including outdoor patios and Rooftop Dining) or portion thereof where food is sold for consumption primarily on premises with a component of sales related to take-out and/or delivery services. Patrons may order food and related retail sales items at a counter or through table service (Drive-Up Customer Service Facilities shall be permitted only through a Special Permit process).

RETAIL USE: The sale of goods to the public for use or consumption rather than for resale. Retail Uses shall include a pharmacy or drug store facility.

ROOFTOP DINING: The use of a structure's roof by a Full Service Restaurant or Fast Casual Restaurant, for assembly or the consumption of food and/or beverages.

SCOPING MEETING: A meeting between the Applicant and City officials at which the boundaries and work tasks for a traffic study can be determined taking into consideration (a) traffic from other developments in the No Build conditions plus the traffic from the proposed development, and (b) a comparison of No Build versus Build conditions.

SETBACK, FRONT: The minimum horizontal distance between the front lot line and the building nearest the front lot line such distance measured at a right angle to the front lot line.

SETBACK, REAR: The minimum horizontal distance between the rear yard line and the building nearest the rear yard line.

SETBACK, SIDE: The minimum horizontal distance between the side yard line and the building nearest the side yard line.

SGOD(s): The Smart Growth Overlay District(s) established in accordance with this Section 30.

SGOD Regulations: The rules and regulations of the Woburn City Council for the Woburn SGOD(s), adopted pursuant to Section 30.1.11 .

SHORT TERM RENTAL: The use of a Dwelling Unit for residential occupancy by a person or persons for a period of fewer than twenty-eight (28) consecutive calendar days for a fee. A Short Term Rental may or may not be facilitated through a booking agent.

SIGN: Any permanent or temporary device, letter, word, billboard, placard, painting, drawing, poster, banner, pennant, insignia, trade flag, streamer, display, emblem, helium balloon larger than one (1) foot in diameter which is attached to a building or structure, or representation used as or which is in the nature of an advertisement, announcement, or direction, or is designed to attract the eye.

SIGN, ACCESSORY: Any sign that advertises or indicates the person occupying the premises on which the sign is erected or maintained, or the businesses transacted thereon, or advertises the property itself or any part thereof as for sale or rent.

SIGN, AREA OF: The entire area within a single continuous perimeter, and a

single plane, which encloses the extreme limits of the advertising message, announcement or wording together with any frame, trim or other integral part of the display. The area of a freestanding or perpendicular wall sign is the entire area of one side of such sign.

SIGN, AWNING: A sign on a retractable shelter which is supported entirely from the exterior wall of a building.

SIGN, BLADE: A projecting sign that is mounted on to a building façade or storefront used to identify tenants which shall be perpendicular to the normal flow of pedestrian traffic. Blade Signs shall not overhang a public way.

SIGN, CANOPY: Any sign that is a part of or attached to an awning, canopy, or other fabric, plastic, or structural protective cover (excluding a marquee) over a door, entrance, window, or outdoor service area.

SIGN, DIRECTORY: A sign that, with respect to the premises on which it is erected and/or an adjacent premises for which the sign is a single common identifier, or with respect to a single integrated development consisting of two (2) or more lots, advertises or indicates one (1) or more of the following: The property address, the name of tenant and/or occupant of the premises, directional or parking instructions, or the sale or letting of the premises or any part thereof.

SIGN ERECTED: Attached, built, constructed, reconstructed, altered, enlarged, moved, painted and posted.

SIGN, FREESTANDING: A sign erected on or affixed to the land by a decorative foundation or framing device not affixed to a building. A freestanding sign may identify the Project name, property address, tenant(s) or occupant(s) of the premises.

SIGN, MARQUEE: A sign on or attached to a permanent overhanging shelter which projects from the face of a building, is entirely supported by said building, and may have a changeable letter panel.

SIGN, PORTABLE: A free-standing sign not permanently secured to the ground or a structure on the lot it occupies, including trailered signs and signs on permanently parked vehicles. (See definition below for Sidewalk Signs or A-Frame Signs). Portable Signs shall be prohibited.

SIGN, ROOF: Any sign which is erected, constructed, and maintained upon or over the roof of any building.

SIGN, SIDEWALK or A-FRAME SIGN: A free-standing temporary sign not permanently secured to the ground or structure on the lot it occupies. Sidewalk or A-Frame signs shall be permitted to be located on sidewalks outside the associated establishment and shall not be situated within a public way. Said signs shall be removed after business hours and during inclement weather and shall not impede pedestrian movement.

SIGN, TEMPORARY: Any exterior sign maintained for a limited period as specified in this ordinance.

SIGN, WALL: A sign affixed to the wall of a building either parallel or perpendicular to the wall of a building and not extending above the roof plate or parapet line.

SIGN, WAYFINDING: Signs necessary to give clear directions to a parking lot or building entrance on the premises.

SIGN, WINDOW: A sign painted or posted on or within six (6) inches of an interior transparent surface including windows and doors.

STORY: A part of a building comprised between a floor and a floor or roof next above, including a basement, but not including a cellar.

STREET: A public way, or a way shown on a plan approved by the Woburn Planning Board under the subdivision control law, or a private way in existence when the subdivision law became effective in the City which, in the opinion of the Planning Board has sufficient width, suitable grades and adequate construction to provide for the needs of a vehicular traffic and the installation of municipal services.

STREET FRONTAGE: The length of continuous linear feet of a lot which runs along a street or a way shown on a plan approved by the Planning Board under the Subdivision Control Law, or a private way in existence when the subdivision law became effective in the City which, in the opinion of the Planning Board, has sufficient width, suitable grades and adequate construction to provide for the needs of vehicular traffic and the installation of municipal services. On a corner lot, the shorter street frontage shall be considered the legal street frontage unless otherwise specified by deed restriction.

STRUCTURE: Any combination of materials assembled, constructed, erected or maintained at a fixed location and place permanently or temporarily in or on the ground.

SUBSTANTIAL ALTERATION OR IMPROVEMENT: An alteration or improvement of a structure or group of structures totaling fifteen thousand (15,000) gross square feet or more in size which will either result in an increase in gross floor area of more than ten percent (10%) or which will require the addition of ten (10) or more parking spaces in order to comply with the Zoning Ordinance. An alteration or improvement shall be determined by the Building Commissioner to be a Substantial Alteration or Improvement based on the aggregate of all repairs, improvements, extensions or enlargements undertaken within a period of three (3) years prior to the submission of the SGOD Project application.

SUPERMARKET: A business activity selling a wide range of fresh and processed foods with household items as an accessory sales item. An allowed ancillary component of the Supermarket may include an accessory coffee shop or other accessory food service facility. Limited indoor seating areas may be permitted for consumption of food on the premises.

TENANT RECREATIONAL FACILITIES: On-site amenities designed and intended for use by tenants of the Project for their recreational enjoyment and which are not generally open for use by non-tenants or members of the public. Examples of tenant recreational facilities include swimming pools, rooftop patios, atria, media rooms, gymnasiums and meeting rooms.

UNDERLYING ZONING: The zoning requirements adopted pursuant to Massachusetts General Law Chapter 40A that are otherwise applicable to the geographic area over which the SGOD has been superimposed, as said requirements may be amended from time to time.

USE: The manner in which land or a structure is to be occupied or utilized.

USEABLE OPEN SPACE: Space that is unoccupied by buildings, and not devoted to service driveways, off-street loading or parking spaces and ways. Qualifying open space shall include private courtyards, outdoor dining patios, landscaped areas within parking lots and sidewalks, and at-grade or on-structure recreational amenities.

WIRELESS COMMUNICATION LINK: A facility consisting exclusively of fixtures and equipment used by a public utility or FCC licensed commercial entity for the wireless transmission and reception of radio signals including:

a. Antenna Elements: reception and transmission equipment and fixtures such as antennae, communication dishes and similar devices.

b. Antenna Support Structures: structures that are erected and used primarily to support such reception and transmission equipment including, without limitation, monopoles.
c. Equipment Shelters: any accessory mechanical, electronic, or telephonic equipment, fixtures, wiring and protective covering customary and necessary to operate such wireless communication equipment.

A wireless communications link is a transmission and reception substation, not a principal facility for conducting a communications business. Wireless communications link shall not include television and radio station transmission antennae.

WIRELESS COMMUNICATIONS LINK, FREE-STANDING EXTERIOR: Any out-of-door wireless communications link mounted on, erected, or supported by any free-standing monopole, excluding lattice style towers requiring three (3) or more legs or guywires.

WIRELESS COMMUNICATIONS LINK, BUILDING-MOUNTED: Any out-of-door wireless communication link mounted on, erected on, or supported in whole or in part by an existing building or structure (including without limitation, buildings, water towers, smoke stacks and the like) occupied and/or used primarily for other purposes.

WIRELESS COMMUNICATIONS LINK, INDOOR: Any indoor wireless communications link mounted inside, erected inside or supported within an existing building or structure including without limitation, buildings, cupolas, church spires, inactive smoke stacks and the like occupied and/or used primarily for other purposes.

YARD, FRONT: An open space extending for the full width of the lot between the front line of the structure wall and the front lot line.

YARD, REAR: An open space extending the full width of the lot between the rear line of the structure wall and the rear lot line.

YARD, SIDE: An open space extending for the full length of a structure between the structure wall and the side lot line. On triangular-shaped lots, each side yard setback shall be paralleled and extended to a rear point of intersection within the lot.

ZONING ORDINANCE: The Zoning Ordinance of the City of Woburn MA.

3. Scope and Authority - The Smart Growth Overlay District is established pursuant to the Governing Laws, and shall be deemed to overlay the parcels

as shown on the Zoning Map of the City of Woburn, as amended. Development Projects proceeding under Section 30 shall be governed solely by the provisions of Section 30 and shall be deemed exempt from the standards and/or procedures of the Underlying Zoning and all other provisions found elsewhere in the Zoning Ordinance, including but not limited to, other overlay provisions, limitations upon the issuance of building permits for residential uses related to a rate of development or phased growth limitation or to a local moratorium on the issuance of such permits, or to other building permit or dwelling unit limitations.

The Underlying Zoning shall remain in effect, and the Applicant shall have the option of applying for Plan Approval pursuant to the zoning controls set forth in Section 30 or complying with all applicable zoning controls set forth in the Zoning Ordinance of the City of Woburn for the underlying district(s) or for other overlay zoning that may be therein defined.

Until such time that the City of Woburn has qualified for one or more density bonus payments corresponding to a number of Bonus Units that is equal to or greater than the minimum number of Incentive Units associated with any Zoning Incentive Payment received for a given SGOD established under this Section 30, the versions of the city's Stormwater Management, and Solar Voltaic Installation ordinances applicable to Development Projects in such SGOD shall be the versions submitted to DHCD on January 25, 2019. Any subsequent amendments to such sections of the Zoning Ordinance shall not apply to Development Projects in such SGOD until DHCD has received written notice of such amendment(s) and determined, within 30 days of receipt, that such amendment(s) does not Unduly Restrict development within such SGOD as per 760 CMR 59.02. Where DHCD fails to issue such determination within said 30 days, such amendment(s) shall be deemed to be approved for purposes of applicability to Development Projects within such SGOD.

4. Administration, Enforcement, and Appeals - The provisions of this Section 30 shall be administered by the Building Commissioner, except as otherwise provided herein. Any legal appeal arising out of a Plan Approval decision by the City Council shall be governed by the applicable provisions of G. L. Chapter 40R. Any other request for enforcement or appeal arising under this Section 30 shall be governed by the applicable provisions of G. L. Chapter 40A.

5. Off-Street Parking and Loading

    1. <u>Off-Street Parking</u> - Off-street parking ratios shall be specified for each individual SGOD as may be established under Section 30.2.

2. Off-Street Loading & Delivery –Loading and delivery spaces shall be designed as follows:

| Feature | Required Dimension(s) |
|---|---|
| Loading space | Min. 10' wide by 35' long for uses requiring tractor trailer access/deliveries<br><br>Any free-standing building < 10,000 sf may load from adjacent drive aisles.<br><br>No loading space shall be located at the front door of a tenant space excluding any Mixed Use Residential building.<br><br>As part of any initial construction phasing to accommodate existing tenants in existing buildings, temporary loading spaces may be allowed to front along a roadway on an interim basis until such time as construction is substantially completed. |
| Access driveway, one-way | 18' wide min. |
| Access driveway, two-way | 24' wide min. |
| Access driveway width at curb line | 28' max. |
| Access driveway radius (Existing driveway radius may remain in current condition and shall not be subject to this requirement) | 30' min. |
| Distance between access driveways on single lot | 50' min. for corner lots; 30' min. for all others |
| Distance between access driveway & curb line of intersecting street | 25' min. |

3. Location of Parking - Surface parking spaces for new construction shall be set back from any existing constructed public way by a minimum of 10 feet. Parking, including loading and delivery spaces, are permitted within a building setback. Notwithstanding anything to the contrary herein, required surface parking may be provided on a lot which abuts an SGOD, provided that the Applicant demonstrates through the Plan Approval process that suitable arrangements, such as ownership, long-term lease or easement, have been made to assure the permanent provision of the parking.

4. Waiver of Parking Requirements - Notwithstanding anything to the contrary herein, any minimum required amount of parking may be reduced by the City Council through the Plan Approval process if the Applicant can

demonstrate that the lesser amount of parking will not cause excessive congestion or endanger public safety, or can demonstrate that lesser amounts of parking will provide positive environmental or other benefits, taking into consideration:

a. The availability of surplus off-street parking in the vicinity of the use being served and/or the proximity of a bus stop or transit station;
b. The availability of public or commercial parking facilities in the vicinity of the use being served;
c. Shared use of off-street parking spaces serving other uses having peak user demands at different times;
d. Subject to approval by DHCD for consistency with 760 CMR 59.04(1)(g), age or other voluntary occupancy restrictions which are likely to result in a lower level of automobile usage;
e. Impact of the parking requirement on the physical environment of the affected lot or the adjacent lots including reduction in green space, destruction of significant existing trees and/or other vegetation, destruction of existing dwelling units, or loss of pedestrian amenities along public ways;
f. Pedestrian access to public transportation, and
g. Such other factors as may be considered by the City Council.

5. Shared Use of Required Parking - Notwithstanding anything to the contrary herein, the use of shared parking to fulfill parking demands that occur at different times of day is strongly encouraged. The minimum parking requirements in Section 30.1.5 may be reduced by the City Council through the Plan Approval process if the Applicant can demonstrate that shared spaces will meet parking demands by using acceptable methodologies (e.g. the Urban Land Institute Shared Parking Report, ITE Shared Parking Guidelines, or other approved studies).

6. Compact Parking Spaces – The City Council may authorize up to twenty percent (20%) of the required parking spaces to be compact parking spaces.

7. Dimensional Requirements for Site Access / Off-Street Parking Facilities – The following requirements shall apply to the design and layout of required parking facilities and site access:

| Feature | Required Dimension(s) |
|---|---|
| Parking space | 9’ wide by 18’ long |
| Parking space, compact car | 8’ wide by 16’ long |
| Parking space, handicapped | As required per AAB and ADA |
| Site drive, parking lot/garage aisle, one-way | 16’ wide min. |

| | |
|---|---|
| Site drive, parking lot/garage aisle, two-way | 24' wide min. |
| New entrance/exit driveway radius for new driveways (Existing radius may remain and are not subject to this requirement) | 20' min. |
| Distance between driveways on single lot | 50' min. for corner lots; 30' min. for all others |
| Distance between driveway & curb line of intersecting street | 25' min. |

8. General Design Requirements for Parking Areas and Loading Facilities

   a. Driveways shall be located so as to minimize conflict with traffic on adjacent streets and where good visibility and site distances are available to observe approaching pedestrian and vehicular traffic.
   b. Parking facilities shall be designed so that a vehicle may proceed to and from each parking space provided for it without requiring the moving of any other vehicle, except for a parking facility providing valet parking.
   c. All loading facilities shall be designed with appropriate means of vehicular access and adequate maneuvering area, which maneuvering area must be provided with immediate ingress to the building to be served.
   d. All parking facilities and loading areas shall have security lighting which shall be arranged and shielded so as to prevent glare onto adjacent streets or properties.
   e. All parking facilities shall be surfaced with asphalt, concrete or other durable material and marked with four inch (4") painted lines or some other permanent marking system to clearly denote all parking spaces and, where appropriate, travel direction and instruction.
   f. All parking and loading areas shall be designed and constructed so as to provide proper drainage of the lot.
   g. Curbing, wheel stops, guard rails or bollards shall be placed at the edges of surfaced parking areas in order to protect landscaped areas or otherwise control parking locations.
   h. Parking facilities shall be kept clean, plowed and free from rubbish, debris and snow. All plant materials shall be maintained in a healthy condition and whenever necessary shall be replaced with new material to ensure continued compliance with any approved plan or landscaping requirement. All surfaces, lighting, fences, walls, and barriers shall be maintained in good repair and whenever necessary shall be replaced.

6. Open Spaces and Recreational Areas

   1. The site design for Development Projects may include common open

space and facilities. Where proposed, the plans and any necessary supporting documents submitted with an application for Plan Approval within the SGOD shall show the general location, size, character, and general area within which common open space or facilities will be located. The plans and documentation submitted to the City Council shall include a description of proposed ownership and maintenance provisions of all common open space and facilities and, if requested by the City Council, any necessary restrictions or easements designed to preserve the open space and recreational areas from future development.

7. Affordable Housing

   1. Affordable Units shall comply with the following requirements:

      a. The monthly rent payment for an Affordable Rental Unit, including applicable utility allowances, shall not exceed thirty percent (30%) of the maximum monthly income permissible for an Eligible Household, assuming a household size equal to the number of bedrooms in the unit plus one, unless another methodology for determining the target household size has been approved by DHCD.
      b. For an Affordable Homeownership Unit, the monthly housing payment, including mortgage principal and interest, private mortgage insurance, property taxes, condominium and/or homeowner's association fees, insurance, and parking, shall not exceed thirty percent (30%) of the maximum monthly income permissible for an Eligible Household, assuming a household size equal to the number of bedrooms in the unit plus one.
      c. Affordable Units required to be offered for rent or sale shall be rented or sold to and occupied only by Eligible Households.

      2. Number of Affordable Units - Twenty percent (20%) of all ownership Dwelling Units and twenty-five percent (25%) of all rental Dwelling Units constructed in a Development Project shall be Affordable Units. Provided however, for Development Projects in which all of the Dwelling Units are limited to occupancy by elderly persons and/or by persons with disabilities, twenty-five percent (25%) of the Dwelling Units shall be Affordable Units, whether the dwelling units are rental units or ownership units.

      3. Fractional Units - When the application of the percentages specified in Section 30.7.2. results in a number that includes a fraction, the fraction shall be rounded up to the next whole number.

      4. Design and Construction - Affordable Housing units must be dispersed

equitably and proportionately throughout the residential portion of a Development Project, including, where applicable, across all buildings, floors and unit types in accordance with the affordable housing restriction and marketing and tenant selection plan approved by DHCD. Affordable Housing units must be comparable in initial construction quality and exterior design to the unrestricted units. However, nothing in this section is intended to limit a homebuyer's rights to renovate a Dwelling Unit under applicable law. The Affordable Units must have access to all on-site amenities. Affordable Housing units shall be finished housing units. All Affordable Housing units must be constructed and occupied not later than concurrently with construction and occupancy of unrestricted units. In Development Projects that are constructed in phases, Affordable Housing units must be constructed and occupied in proportion to the number of units in each phase of the Development Project.

5. Unit Mix - The total number of bedrooms in the Affordable Housing units shall be at least proportionate to the total number of bedrooms in all units of the Project of which the Affordable Units is part.

6. Affordable Housing Restriction - Each Affordable Unit shall be subject to an Affordable Housing Restriction approved by DHCD, pursuant to 40R, and recorded with the County Registry of Deeds or Land Court Registry District of the County. All Affordable Housing Restrictions must include, at minimum, the following:

    a. A description of the Affordable Homeownership Unit, if any, by address and number of bedrooms; and a description of the overall quantity, initial unit designations and number of bedrooms and number of bedroom types of Affordable Rental Units in a Development or portion of a Development which are rental. Such restriction shall apply individually to the specifically identified Affordable Homeownership Unit and shall apply to a percentage of rental units of a rental Development or the rental portion of a Development with the initially designated Affordable Rental Units identified in, and able to float subject to specific approval by DHCD in accordance with, the corresponding Affirmative Fair Housing Marketing Plan (AFHMP) and DHCD's AFHMP guidelines.
    b. The term of the Affordable Housing Restriction which shall be in perpetuity or for the longest period customarily allowed by law but shall be no less than thirty (30) years.
    c. The name and address of the Monitoring Agent with a designation of its power from the Administering Agency to monitor and enforce the Affordable Housing Restriction.

d. Reference to a housing marketing and resident selection plan, to which the Affordable Unit is subject, and which includes an affirmative fair housing marketing program, including public notice and a fair resident selection process. If approved by DHCD, pursuant to 40R, the housing marketing and selection plan may provide for local preferences in resident selection. The plan shall designate the household size appropriate for a unit with respect to bedroom size and provide that preference for such unit shall be given to a household of the appropriate size.
e. A requirement that buyers or tenants will be selected at the initial sale or initial rental and upon all subsequent sales and rentals from a list of Eligible Households compiled in accordance with the housing marketing and selection plan.
f. Reference to the formula pursuant to which rent of a rental unit or the maximum resale price of a homeownership unit will be set.
g. A requirement that only an Eligible Household may reside in an Affordable Unit and that notice of any lease or sublease of any Affordable Unit shall be given to the Monitoring Agent.
h. Provision for effective monitoring and enforcement of the terms and provisions of the Affordable Housing Restriction by the Monitoring Agent.
i. Provision that the restriction on an Affordable Homeownership Unit shall run in favor of the Monitoring Agent and the City of Woburn, in a form approved by municipal counsel and DHCD pursuant to the Governing Laws, and shall limit initial sale and re-sale to and occupancy by an Eligible Household.
j. Provision that the owner(s) or manager(s) of Affordable Rental Unit(s) shall file an annual report to the Monitoring Agent, in a form specified by that agent certifying compliance with the provisions of this Section 30.1.7 and containing such other information as may be reasonably requested in order to ensure affordability.
k. Provision that the restriction on Affordable Rental Units in a rental Project or rental portion of a Project shall run with the rental Project or rental portion of a Project and shall run in favor of the Administering Agency and the City of Woburn, in a form approved by municipal counsel and DHCD pursuant to the Governing Laws, and shall limit rental and occupancy to an Eligible Household.
l. A requirement that residents in Affordable Units provide such information as the Monitoring Agent may reasonably request in order to ensure affordability, subject to DHCD Guidelines and Fair Housing Laws.
m. Designation of the priority of the Affordable Housing Restriction over other mortgages and restrictions.

7. Administration - The Administering Agency must act as or engage a Monitoring Agent to perform administration, monitoring and enforcement services regarding compliance of the Project with the Affordable Housing requirements under this Section 30.1.7. The Monitoring Agent shall ensure the following:

    a. Prices of Affordable Homeownership Units are properly computed; rental amounts of Affordable Rental Units are properly computed.
    b. Income eligibility of households applying for Affordable Units is properly and reliably determined.
    c. The housing marketing and resident selection plan has been approved by DHCD pursuant to the Governing Laws, conforms to all requirements and is properly administered.
    d. Sales and rentals are made to Eligible Households chosen in accordance with the housing marketing and resident selection plan with appropriate unit size for each household being properly determined and proper preference being given.
    e. Affordable Housing Restrictions meeting the requirements of this section are recorded with the Middlesex County Registry of Deeds or Land Court. In the case where the Monitoring Agent cannot adequately carry out its administrative duties, upon certification of this fact by the City Council or by DHCD, the administrative duties shall devolve to and thereafter be administered by a qualified housing entity designated by the City Council.
    f. Unit Phasing and Occupancy Plan – A unit phasing and occupancy plan shall be submitted to the Commissioner of Buildings for review and approval prior to the issuance of a Building Permit. Said unit phasing and occupancy plan shall identify each affordable unit and shall specify the schedule for construction in phases where applicable and scheduling of occupancy for both market rate and affordable units. Occupancy permits for Affordable Units shall be issued prior to those for constructed and occupied concurrently with market rate units, whether occupancy permits are sought on a building-wide basis, for each unit individually, by floor in a multi-story building or by cluster in a townhouse development.

8. Costs of Housing Marketing and Selection Plan - The housing marketing and selection plan may make provision for payment by the owner of reasonable costs to the Monitoring Agent and the owner shall pay reasonable costs to the Monitoring Agent to develop, advertise, and maintain the list of Eligible Households and to monitor and enforce compliance with the Affordable Housing requirements. Nothing herein shall restrict the owner from acting as the Monitoring Agent subject to DHCD's approval through the respective Affordable Housing

Restriction and compliance with applicable DHCD regulations. Costs associated with the requirements of this section shall not exceed one-half percent of the amount of rent of the Affordable Rental Units (paid annually) or one percent of the sale or resale price of Affordable Homeownership Units (payable upon each sale or resale).

In combination, the various documentation required under Section 30.1.11, to be submitted with an application for Plan Approval, shall include details about construction related to the provision, within the development, of units that are accessible to the disabled and appropriate for diverse populations, including households with children, other households, individuals, households including individuals with disabilities, and the elderly.

8. Signage Regulations

1. Permitted Signs: The following signs are permitted in all areas of the SGOD:

   a. Signs erected by or on the order of a governmental agency when limited to governmental purposes and excluding any advertising.
   b. Names of buildings, date of erection, monumental citations and commemorative tablets when made a permanent and integral part of a building, not to exceed ten (10) square feet.
   c. Banners or flags emblematic of or issued by national, state or local governments.
   d. Signs not to exceed two (2) square feet which indicate warnings, hazards or public conveniences such as "no trespass", "beware of dog" or rest room signs.
   e. Up to two (2) signs identifying churches or religious facilities on each street frontage, one (1) of which may not exceed twenty (20) square feet in area and one (1) of which may not exceed ten (10) square feet in area. One (1) of the permitted signs may be free-standing and may be used for notices and announcements of services and events.
   f. Wayfinding Signs. Signs necessary to give clear directions to a parking lot or building entrance on the premises. Such signs shall not exceed four (4) square feet in area, nor shall they stand more than four (4) feet high. Such signs may be located within required yard areas but not closer than five (5) feet from public streets. Wayfinding Signs may not advertise any tenant or user on the property.

2. Prohibited Signs: The following types of signs are prohibited in all areas of the SGOD:

a. All non-necessary signs including billboards.
b. Roof signs
c. Signs which extend more than four (4) feet above the main roof line of the buildings to which they are attached.
d. String lights used in connection with commercial premises with the exception of lighting of outdoor patio or public activity space and temporary lighting for holiday decorations.
e. Signs or other advertising devices with visible moving or movable parts or with flashing, animated or intermittent illumination.
f. Portable, fluttering, feather or movable signs including trailer signs and signs affixed to or painted on a vehicle permanently parked on the premises, fence or utility pole so as to serve as a sign.
g. Pole mounted and pylon signs.

3. General Requirements for Signs:

a. Required setbacks for signs shall be the same as those specified for the principal building on the lot.
b. All signs and the immediate area surrounding free-standing and ground mounted signs must be maintained in good repair and free of rubbish and weeds.
c. The Building Commissioner is authorized to order the repair or removal of any sign and its supporting structure that in the judgment of the Building Commissioner is dangerous, or in disrepair or which is erected or maintained contrary to this by-law. Such repair or removal shall be the responsibility of the building owner and must be completed within thirty (30) days of notification by the Building Commissioner. Appeals from the Building Commissioner's order shall be held by the Woburn Board of Appeals.
d. No sign shall be placed in a manner that casts reflection upon any dwelling.
e. All sign illumination shall be interior, non-exposed or shielded exterior illumination directed solely at the sign. Illumination shall be steady and stationary.
f. No sign or its illuminator shall by reason of its location, shape, size or color create, in the opinion of the Chief of Police, a driving hazard to vehicles or obstruct the effectiveness of any official traffic sign, traffic signal or traffic marking.
g. Free-standing Signs greater than four feet tall shall not be located within a triangular area formed in the following manner: By a front lot line, a street intersecting such front lot line and a straight line which connects points along the aforesaid lines twenty-five (25) feet from their intersection.
h. No Sign shall be maintained which advertises a product no longer sold

or a commercial enterprise no longer in operation on the premises upon which the Sign is located. Except for allowed real estate "For Sale" or "For Lease" signs, no Sign shall remain in place in or on the vacated premises for more than thirty (30) days from the day of vacancy. No holiday Signs or decorations shall be posted more than sixty (60) days prior to any holiday or remain posted more than thirty (30) days after any holiday.

i. No Signs shall be affixed in a temporary or permanent manner to any utility pole or poles located along a way in the City of Woburn in connection with the private activity, business, enterprise or event such as, but not limited to, the sale, rental or lease of a premises directly to a private business operation or any other private activity.

9. Additional Use Regulations

1. General Requirements

a. There shall be no use of a building, structure or land for a purpose that creates a nuisance by reason of the emission of odors, waste, fumes, dust, smoke, vibration, noise, light, radiation, or other causes.

b. The open display or open storage of junk shall be prohibited in all districts, including, but not limited to more than one (1) unregistered automobile, worn out, cast off, or discarded articles and materials which are ready for destruction or have been stored or collected for salvage or conversion into some other use. Any storage of such articles and materials shall be enclosed or screened so that they are not visible from adjacent streets or properties.

c. No equipment or process shall be utilized in any use of land, buildings or structures which creates a nuisance by virtue of unreasonable noise, vibration, dust, smoke, radiation, waste, glare, fumes, or odors detectable to the normal senses off the lot. In the case of electrical interference, no equipment or process shall be used which creates unreasonable visual or audible interference in any radio or television receivers. No other noise, vibration, smoke, dust, odors, heat, glare, unsightliness, or other nuisance shall be produced which is discernable from other properties.

d. There shall be no nuisance created as a result of the emission of odors, fumes, dust, noise, smoke, vibration, radiation, waste or any other cause which would be or appear to be injurious, noxious, offensive, hazardous, or otherwise objectionable to the general neighborhood or to the City. Permits from the State Department of

Environmental Protection (DEP) shall define acceptable limits for the effects of individual projects.

2. Requirements for Fences
   a. No fence, retaining wall, screen or other method of separation shall be erected without a permit; however, no permit shall be required for the erection of a fence in a location in which a previously existing legally erected fence was maintained provided that the new fence is erected within thirty (30) days of the removal of the former fence and is not prohibited by state law or regulated by the Massachusetts State Building Code. No permit shall be required for the repair of a previously existing legally erected fence which is in broken or damaged condition including the replacement of the fence, or a section thereof, with a new fence provided that the fence is not prohibited by state law or regulated by the Massachusetts State Building Code.
   b. Any fence built or maintained within the front setback requirement shall not exceed three (3) feet in height. All other fencing shall not exceed six (6) feet in height.
   c. The smoothest and best appearing side of a fence must face the abutting land.
   d. A fence that has been painted or refinished or otherwise decorated that is not kept up and properly maintained shall not be allowed to stand.
   e. No color combinations or other unnecessary configurations will be used to attract unnecessary attention or in the opinion of the fence viewer would lower the value or disrupt the harmony of adjacent property.

10. Development Impact Mitigation

1. Purpose - The purpose of these provisions is to protect the health, safety and general welfare of the inhabitants of the City of Woburn by providing for the assessment of plans for proposed uses and structures which will have impacts on traffic and public utilities, and by requiring the reasonable mitigation of those impacts. Section 30.10 will ensure that Woburn's infrastructure is upgraded and maintained in a responsible manner consistent with State and Municipal Laws. This Section 30.10 will increase the safety and reliability of Woburn's roads for pedestrians, residents, employees and motorists alike and will ensure that major developments bear a proportionate share of the cost of capital facilities necessary to accommodate such development.

2. Applicability - The requirements of this section shall apply to any new construction or Substantial Alteration or Improvement within the SGOD.

3. Submission of Development Impact Statement (DIS) - An application for development within the SGOD shall include a DIS which shall be prepared by personnel competent and qualified in their respective fields; at a minimum, the traffic and utility assessments must be prepared by qualified Massachusetts Registered Professional Engineers. The DIS shall include detailed, reasonable information on the following subjects, including an assessment of the clear, direct impacts, solely from the subject Development Project, upon:
   - The public health, safety and general welfare of rResidents of the City who visit, live in, work in or are otherwise in or near the Development Project and their public health, safety and general welfare;
   - The immediately surrounding natural environment;
   - Nearby parks, playgrounds, and other recreational and open spaces;
   - Storm water management and drainage courses;
   - Roadways, streets and other public ways;
   - Motor vehicle traffic including public transit, passenger and truck traffic;
   - Non-motorized vehicular traffic, including pedestrian movement and safety and bicycle travel;
   - Public utilities, including water and sewer supplies and demand, gas, electric, telephone and the like;
   - Sanitary waste disposal; and
   - Trash.; and
   - Proposed on-site school bus drop off/pick up locations.

   The DIS shall include the following:

   a. Traffic Study: This assessment shall document existing traffic conditions in the vicinity of the proposed Project, accurately describe the volume and effect of the projected traffic generated by the proposed Project, and identify measures necessary and sufficient to mitigate any adverse impacts on existing traffic conditions.

      Prior to preparing the Traffic Study, the Applicant's Registered Professional Engineer is strongly encouraged to participate in a Scoping Meeting with the City Engineer to review the proposed scope of the Traffic Study including the identification of the project impact area or intersections to be studied. The City Engineer shall provide a written statement to the City Council regarding concurrence or disagreement with the proposed scope or the scope as otherwise provided in the Traffic Study, and the reasons for his/her opinion. Such written statement shall be provided to the Applicant either within thirty (30) days of the City Engineer's pre-application meeting with the Applicant's Registered Professional Engineer or, if no Scoping Meeting is held within thirty (30) days of the City Engineer's receipt of the

Traffic Study as part of the application circulated by the City Clerk. Such written statement of concurrence or disagreement shall be either included with or subsequently attached to, as applicable, the Traffic Study submitted by the Applicant. The City Council may require the Applicant to study and evaluate additional roadways and/or intersections to address any concerns identified by the City Engineer.

The Traffic Study shall contain the following:

i. Existing traffic conditions: Measurement and assessment of average and daily peak hour vehicular, pedestrian and bicycle traffic volumes, average and peak speeds, sight distances, accident data and Levels of Service (LOS) of all intersections and streets within the project impact area and including any intersection projected to be adversely affected by the project over the No Build condition. Such data shall be no more than twelve (12) months old at the time of application, unless other data are specifically approved by the City Council with the recommendation(s) of the City Engineer. Automated Traffic Recorder (ATR) data must be for a minimum of 48 hours, not including Saturdays, Sundays, holidays, any day within a holiday week, or any day with any snowfall in the Boston basin geographical area. For each location counted, a plot of average directional count by hours for a 24 hour average weekday shall be provided.

   For Development Projects near a State or Federal highway, turning movement counts must be sufficient to show that they include, at a minimum, the two highest peak hours among these possibilities: AM highway peak, mid-day highway peak, mid-afternoon highway peak, and PM highway peak. If the two highest generator peak hours do not overlap any part of the highway peak, substantiating data must be provided.

   With respect to accident history, a minimum of three (3) years of data shall be provided for each roadway and intersection impacted by the project. Written requests for accident reports shall be made to the Woburn Police Department for local roads and intersections and to MassDOT's District 4 Engineer for roads and intersections on State-owned highways.

ii. Projected traffic conditions: Projected traffic conditions for the design year of occupancy, including a statement of the design year of occupancy, estimated background traffic growth on an annual average basis, and impacts of other proposed developments that

have been approved in whole or in part by the City of Woburn or an abutting town which will affect future traffic conditions.

iii. Projected impact of proposed Development Project: Projected peak hour and daily traffic generated by the Development Project on the roads and ways in the project impact area, sight lines at the intersections of the proposed driveways and streets, existing and proposed traffic controls in the vicinity of the proposed Development Project, and projected post-development traffic volumes and Levels of Service (LOS) of intersections and roads likely to be affected by the proposed Development Project.

iv. Traffic mitigation measures: Specific measures to be undertaken by the Applicant in order to mitigate the impacts of the proposed Development Project and to ensure that current traffic conditions and Levels of Service (LOS) are not adversely affected by the Project. Also, the assessment shall consider both on site and off site mitigation measures, to include but not be limited to new traffic control signals, increase(s) in right of way capacity via widening roads, or other right of way or intersection improvements. Where the use of existing transit systems is proposed as mitigation, analysis of the impacts on capacity and performance of these services should be quantified and documented in this section. The proposed mitigation measures, if approved, shall be required to be completed prior to the issuance of a final certificate of occupancy for the Project component. The assessment shall also consider how the proposed mitigation measures and future year performance degradation are fully mitigated to the equivalent No Build condition.

b. Utility Impact Assessment: The Utility Impact Assessment shall document the capacity and condition of the existing public utility infrastructure in the vicinity of the proposed Project, including but not limited to water and sewer services and storm water drainage systems. The assessment shall also accurately describe the additional demand, if any, upon said infrastructure items, generated by the proposed Project, and identify measures necessary and sufficient to mitigate the impact caused by any such additional demand.

Prior to preparing the utility impact assessment, the Applicant's Professional Engineer is strongly encouraged to meet with the City Engineer to review the proposed scope of the utility impact assessment, including the identification of the Project impact area to be studied, which shall include all water and sewer utilities likely to be

affected by the proposed project. The City Engineer shall provide a written recommendation to the City Council regarding the proposed scope or the scope as otherwise provided in the utility impact assessment, and the reason(s) therefor. Such written recommendation shall be provided to the Applicant within thirty (30) days of the City Engineer's meeting with the Applicant's Professional Engineer, or, if no Scoping Meeting is held, within thirty (30) days of the City Engineer's receipt of the utility impact assessment as part of the application circulated by the City Clerk. Such written recommendation shall either be included with or subsequently attached to, as applicable, the Utility Impact Assessment submitted by the Applicant. The City Council may require the Applicant to study and evaluate additional utility infrastructure impacts, including but not limited to water, sewer and storm water drainage, to address any concerns identified by the City Engineer.

The Utility Impact Assessment shall evaluate:

i. Existing condition and capacity: Identification of the size, type, condition and overall remaining capacity of the existing utility infrastructure. The assessment shall include examination of available and discovered City plans within the immediate Project vicinity, completion of hydrant pressure testing of the City water main(s) serving the facility and, where necessary, video camera inspections of existing sewer service connections to be re-used. The assessment shall also include an up-to-date inventory of City-owned utility infrastructure impacted by the Project; for sanitary sewer and storm drainage systems provide estimates of the existing capacity and percentage of capacity presently utilized as well as excess capacity if any;

ii. Projected conditions: Projected usage shall be provided, including estimated water usage, and sanitary and storm water outflows; together with the impacts, as available, of usage caused by other developments already approved by the City.

iii. Utility mitigation measures: Specific measures to be implemented by the Applicant to mitigate the impacts of the proposed Development Project on the public water and sewer infrastructure, including increasing the capacity by the replacing and/or enlarging existing lines; inflow and infiltration improvements or payments; on-site retention or detention tanks; or other on-site or off-site measures. The proposed mitigation measures, if approved by the City Council, shall be solely related to the Development Project and

completed prior to the issuance of a final Certificate of Occupancy for the Project component.

c. Other Public Facilities Impact Assessments: This section of the DIS shall include detailed information about the Development Project's projected impact on all of the following:

   i. For all projects, where applicable, a description of information or analysis of impacts on-site or nearby:

      - Parking, including existing and proposed on-site motor vehicle and bicycle parking layout(s)/accommodations and on-street/off-site (where applicable) motor vehicle and bicycle accommodations to evidence proposed facilities are sufficient to serve the project ~~site~~;

      - Transit Services, including locations of bus, train and transit stops, shelters, stations and routes within the project impact area (as defined above) as well as private shuttle bus service routes, school bus stops, etc. within five hundred (500) feet of the project site. Information shall be provided relative to daily AM and PM schedules (including Saturdays for residential or retail projects) for stops/stations within five hundred (500) feet of the project site including a summary of transit schedules and headways for each service.

      - Environmental conditions and impacts, including a summary of wetland resource areas and buffer zones, identified and potential vernal pools, groundwater protection zones, flood hazard areas and floodplains, steep slopes and areas of known soil/groundwater contamination. If the project is subject to a Notice of Intent filing, the Applicant shall provide a copy of the submission to the City Council to fulfill the provisions of this Section.

      - Parks, playgrounds, and other recreational and open spaces, including all public and privately-owned open space parcels and trails, public parks and playgrounds and athletic facilities such as pools, running tracks, walking paths and ballfields within five hundred (500) feet of the project site.

      - Pedestrian movement and safety, including existing levels of pedestrian traffic within five hundred (500) feet of the project

site, five (5) year projections of volumes of pedestrian traffic, the location and condition of existing sidewalks and other pedestrian ways including whether or not compliant with ADA requirements, and provision of lighting and other safety measures in areas where pedestrian traffic exists or is expected as a result of the development.

- Trash and recycling. If the project will request public trash service, include estimated tonnage of refuse and recycling to be generated by the development on a weekly basis and any private or public provision(s) for collection of trash and recycling.

d. Report by City Engineer - The City Engineer shall be responsible for preparing a written report to the City Council after consulting with the Superintendent of Public Works and all other relevant departments regarding the adequacy and accuracy of the scope, data, findings, and proposed mitigation measures presented in the Development Impact Statement and the proposed mitigation measures proposed in the traffic mitigation and utility impact assessments.

e. The City Council may require peer review as it deems appropriate.

f. Performance and Completion of Mitigation Measures

1. No building permit shall be issued to an Applicant for a Plan Approval under this section until surety has been established in a sum sufficient to ensure completion of any said mitigation measures, in the form of a performance bond, irrevocable letter of credit, or escrow agreement. The sum of said surety shall be established by the City Council after consulting with the City Engineer, who shall be responsible for review and approval of the costs of construction/completing mitigation measures and including a minimum of an additional twelve percent (12%) to the estimate, to account for inflation and as a contingency against unexpected field conditions. Such cost estimate shall be prepared by the Applicant's professional engineer or licensed architect. The City Solicitor shall approve the surety as to proper form and content prior to its acceptance by the City Council.

   The Applicant is expected to complete/implement any and all required mitigation construction/improvements as conditions of any Plan Approval prior to the issuance of a final occupancy permit for the project.

The City Council may, by majority vote, periodically reduce the amount of the bond held as surety to guarantee completion of mitigation measures. No bond reduction or final release of remaining bond monies shall be approved unless the Council has received certification from the City's Engineering Department and/or any other appropriate municipal department that all required mitigation work has been satisfactorily completed.

2. Payments in Lieu of Performing Mitigation Measures
   It is the preference of the City Council that the developer/applicant complete all mitigation measures, if any. Occasionally the option of a payment in lieu of performance may be appropriate in certain circumstances (e.g. contributions, which to the extent not voluntary and with the exception of the 12% interest and contingency specified above cannot exceed the cost of any direct and proportionate impact of the Development Project, toward a larger-scale infrastructure project being planned by others). In those circumstances the City Council may authorize the Applicant to make a payment in lieu of performing all or part of mitigation measure(s) which have been made a condition of the Plan Approval. Any such payment shall be equivalent to the amount calculated by the City Engineer in accordance with paragraph f.1 above and shall be placed into an account dedicated to the specific purpose identified as a condition of the Plan Approval. In calculating any such payment, the Applicant shall not be credited the amount of the contribution required under Title 13 of the City of Woburn Municipal Code as specified in the version of the city's Ordinance submitted to DHCD on January 25, 2019, or any contribution to roadway, water or sewer improvements required as a result of the environmental review process of the state or federal government. In the case when such payment in lieu of performance is accepted, if the funds have not been encumbered by the City of Woburn within two years of the issuance of an occupancy permit, the City Council upon request shall hold a hearing to determine why the funds have not been spent or encumbered. At said hearing, the City Council may extend for a period of no more than two years the time frame to encumber such payment in lieu of performance. If payment in lieu of performance is not executed in the aforementioned time frame, the payment shall be returned to the developer.

3. If the Applicant has defaulted on the conditions of the Plan Approval, and/or has not completed required mitigation work before the issuance of a temporary or final occupancy permit, the City

shall complete the mitigation measures as much as is practical with funds obtained through the exercise of the surety posted in accordance with paragraph e.1 above.

4. If a Development Project generates a significant number of additional residents and/or employees and such participation is warranted and required by the City Council, the Applicant shall agree to participate in the regional or local transportation management association (TMA) and implement a transportation demand management program that includes the assignment of an Employee/Resident Transportation Coordinator to work with the TMA, residents and employees to encourage ridesharing and the use of public transportation.

5. Waivers - The City Council, by a majority vote, after receiving the Development Impact Statement and the report of the City Engineer, may waive all or part of the mitigation requirements of this Section 30.1.10. The City Council, in approving a waiver, shall make a specific finding, in writing, that the granting of a waiver will not create conditions which are substantially more detrimental to the neighborhood in which the site is located, than if the waiver were not granted. As the basis for its decision, the City Council shall consider other positive impacts of the Project upon the project impact area not measured by the Development Impact Statement, such as, but not limited to, the substantial remediation of an environmentally contaminated site, the creation of needed affordable housing and transportation demand management measures.

11. Plan Approval Procedures - The City Council shall adopt and file with the City Clerk SGOD Regulations relative to the application requirements and contents for Plan Review, subject to approval by the DHCD. Plan Approval procedures shall be as follows:

    1. Pre-Application Materials/Guidance - Prior to the submittal of a Plan for Plan Approval, a "Concept Plan" may be submitted to help guide the development of the definitive submission for Project build out. Such Concept Plan shall reflect the following:

        a. Overall building envelope areas
        b. Open space and natural resource areas
        c. General site improvements, groupings of buildings and proposed land uses

d. Anticipated parking spaces and locations
e. Site vehicular access

The Concept Plan is intended to be used as a tool for both the Applicant and the City Council to ensure that the proposed Project design will be consistent with the Design Standards and other requirements of the SGOD.

2. Application Procedures - All Projects are subject to Plan Approval.

1. Submittal - An application for Plan Approval shall be submitted in accordance with the requirements herein and further specified in the SGOD Regulations, on the form provided by the PAA along with the application fees set forth in the SGOD Regulations. The application shall be accompanied by such plans and other documents as required by the SGOD Regulations required to verify compliance with any of the provisions of this Section in a manner that, as defined in 760 CMR 59.02, does not Unduly Restrict development within the SGOD. All plans shall be prepared by certified architects or engineers as required by the Massachusetts Building Code. An application for Plan Approval shall be filed by the Applicant with the City Clerk. A copy of the application, including the date of filing certified by the City Clerk, as well as the required number of copies of the application, shall be filed forthwith by the Applicant with the City Council. Application submissions must include a hard copy as well as an electronic copy in PDF. (Plans shall be provided in CAD format if requested by the City Engineer.) Said filing shall include any required forms provided by the City Council to the extent such forms are part of the SGOD Regulations or have otherwise been approved by DHCD. In addition to the submission requirements of SGOD Regulations, an application for Plan Approval shall also include all of the following which shall be submitted to the City Council:

a. Development narrative including all uses, breakdown of square footage for each use, number of housing units and zoning summary.
b. Photos of adjacent properties and other properties impacted by the Project.
c. Conceptual Building plans: all levels including roof.
d. Conceptual Building elevations: all sides including courtyards and interior lot elevations.
e. Massing perspective sketches or renderings illustrating the key elements of the development proposal within its context.
f. Proposed exterior lighting plan with photometric information.

g. Proposed stormwater management plan with rainwater calculations in accordance with the City's Stormwater Management Ordinance in accordance with Section IV of the General Ordinance, regardless of the size of the land area being disturbed. The documents shall clearly differentiate between existing and proposed work by use of screened lines or color. Changes and revisions to subsequent submittals shall be prominently noted.
h. Evidence that the Development Project complies with the cost and eligibility requirements of Section 30.1.7;
i. Development Project plans that demonstrate compliance with the design and construction standards of Section 30.1.19;
j. A draft form of Affordable Housing Restriction that satisfies the requirements of Section 30.1.7; and
k. Review Fees: If the City Council deems peer review appropriate under Section 10.3.e, the Applicant shall be required to pay for reasonable consulting fees to provide peer review of the application for the benefit of the City Council, pursuant to G.L. Chapter 40R, Section 11(a). Such fees shall be held by the City of Woburn in an interest-bearing escrow account, and shall be used only for expenses associated with the use of outside consultants employed by the City Council in reviewing the application. Any surplus funds remaining after the completion of such review, including any interest accrued, shall be returned to the Applicant forthwith;

2. Circulation to Other Boards – In accordance with the SGOD Regulations, the City Council shall provide a copy of the application materials to all relevant municipal Boards, Departments, Commissions and Officials as determined by the City Council and the Monitoring Agent. These entities shall provide any written comments within thirty (30) calendar days of receipt of the plan and application as distributed by the City Clerk.

3. Public Hearing and Time Limits - The City Council shall hold a public hearing and review all applications according to the procedure specified in Massachusetts General Law Chapter 40A Section 11.

4. City Council Action - The decision of the City Council shall require a majority vote of the Council's members and be made, and written notice of the decision filed with the City Clerk within one hundred twenty (120) days of receipt of the Application by the City Clerk. This time may be extended by mutual agreement between the City Council and the Applicant by written agreement filed with the City Clerk. Failure of the City Council to take action within said one hundred twenty (120)

days or the extended time shall be deemed an approval of the Plan Approval application.

5. Criteria for Plan Approval - The City Council shall approve the Development Project upon all of the following findings:

   a. The Applicant has submitted the required fees and information as set forth in the SGOD Regulations.
   b. The proposed Development Project as described in the application meets all of the requirements and standards set forth in this Section, applicable Design Standards and the SGOD Regulations, or a waiver has been granted therefrom, and shall also include written confirmation by the Monitoring Agent that all Affordable Housing requirements have been satisfied.
   c. Any extraordinary adverse potential impacts of the Project on nearby properties are shown to be adequately mitigated.
   d. Reasonable conditions may be incorporated into any Plan Approval decision to ensure substantial compliance with the SGOD only when the Project as submitted does not fully comply with the standards and criteria of the SGOD ordinance.

6. Criteria for Plan Denial - A Plan Approval application may be disapproved only where the City Council finds that:

   a. The Applicant has not submitted the required fees and information as set forth in the SGOD Regulations; or
   b. The Project as described in the application does not meet all the requirements and standards set forth in this Section, applicable Design Standards and the SGOD Regulations, or that a required waiver therefrom has not been granted; or
   c. It is not possible to adequately mitigate extraordinary adverse Project impacts on nearby properties by means of suitable conditions.

12. Waivers - Upon request of the Applicant, the City Council may waive dimensional and other requirements, including Design Standards, with conditions, in the interests of design flexibility and overall Project quality, and upon a finding of consistency of such variation with the overall purpose and objectives of the SGOD, and if it finds that such waiver will allow the Project to achieve the density, affordability, mix of uses and/or physical character allowed under this Section. Notwithstanding anything to the contrary in this Zoning Ordinance, the Affordable Housing provisions that comprise Section 30.1.7 shall not be waived without the express written approval of DHCD. The

City Council will also take into consideration the following items when considering a waiver:

1. High performance energy efficient buildings and construction methods.

2. Projects with publicly accessible open space.

3. A demonstrated shared parking initiative that makes efficient use of land and existing parking supply.

13. Plan Changes After Approval by City Council

    1. Minor Plan Changes - After Plan Approval, an Applicant may apply to make minor changes in a Development Project that do not affect the overall build out or building envelope of the site, or provision of open space, number of housing units, or housing need or Affordable Housing features. Such minor changes must be submitted to the City Council on redlined prints of the approved plan, reflecting the proposed change, and on application forms provided by the City Council. The City Council may authorize such changes at any regularly scheduled meeting, without the need to hold a public hearing. The City Clerk shall set forth any decision to approve or deny such minor change by motion and written decision, and provide a copy to the Applicant for filing with the City Clerk.

    2. Major Plan Changes - Those changes deemed by the City Council to constitute a major change in a Development Project because of the nature of the change in relation to the prior approved plan, or because such change cannot be appropriately characterized as a minor change as described above, shall be processed by the City Council as a new application for Plan Approval pursuant to this Section.

14. Fair Housing Requirement **-** All Development Projects within the SGOD shall comply with applicable federal, state and local fair housing laws.

15. Project Phasing - The City Council may allow a Project to be phased at the request of the Applicant or to mitigate any extraordinary adverse impacts on nearby properties and provided that the submission shows the full build-out of the Project and all associated impacts as of the completion of the final phase and subject to approval of the City Council. For Projects that are approved and developed in phases, the proportion of Affordable units shall be no less than the minimum percentage required for the Project as a whole under Section 30.7.2. Any off-site mitigation requirements may be structured in phases to coordinate with the Project buildout.

16. Decisions - The City Council shall issue to the Applicant a copy of its decision containing the name and address of the owner, identifying the land affected and the plans that were the subject of the decision and certifying that a copy of the decision has been filed with the City Clerk. If twenty (20) days have elapsed after the decision has been filed with the City Clerk without an appeal having been filed, or if such appeal having been filed is dismissed or denied, or if a plan is approved by reason of the failure of the City Council to timely act, the City Clerk shall so certify on a copy of the decision. A copy of said decision shall be filed with the Registry of Deeds.

    A Plan Approval shall remain valid and run with the land indefinitely, provided that construction has commenced within two (2) years after the decision is issued, which time shall be extended by the time required to adjudicate an appeal and which time shall be extended if the Project proponent is actively pursuing other required permits or there is other good cause for failure to commence.

    The City Council may require the posting of a performance bond to secure and/or screen a Development Project site in the event that demolition is undertaken but subsequent work lapses, for any reason within or outside the Applicant's control, for a period longer than one (1) year.

17. Date of Effect - The effective date of this ordinance shall be the date on which such adoption is voted upon by the Woburn City Council pursuant to the requirements of Section 5 of Chapter 40A of the General Laws and Chapter 40R of the General Laws; provided, however, that an Applicant may not proceed with construction pursuant to this Ordinance prior to the receipt of final approval of this Ordinance and accompanying Zoning Map by DHCD.

18. Severability - If any provision of this Section is found to be invalid by a court of competent jurisdiction, the remainder of this Section shall not be affected but remain in full force. The invalidity of any provision of this Section shall not affect the validity of the remainder of the City’s Zoning Ordinance.

19. Design Standards - The City Council may adopt and amend, by simple majority vote, Design Standards which shall be applicable to all Projects subject to Plan Approval by the City Council. Such Design Standards must be objective and not subjective and may not unreasonably impair development of proposed Projects in the SGOD. The City Council may only address the scale and proportions of buildings, the alignment, width, and grade of streets and sidewalks, the type and location of infrastructure, the location of building and garage entrances, off street parking, the protection of significant natural site features, the location and design of on-site open spaces, exterior Signs,

and buffering in relation to adjacent properties. DHCD may, at its discretion, require Design Standards to contain graphics illustrating a particular standard or definition in order to make such standard or definition clear and understandable.

Before adopting any Design Standard, the City Council shall submit the proposed Design Standard to DHCD for approval. Any amendment to the Design Standards shall not take effect until approved by DHCD and filed with the City Clerk.

An application for Plan Approval that has been submitted to the City Clerk pursuant to this Section shall not be subject to any Design Standard that has not been approved by DHCD.

30.2 Establishment and Delineation of the Smart Growth Overlay Districts

1. Woburn Mall Smart Growth Overlay District (WM-SGOD)

    1. Establishment and Delineation of the WM-SGOD **-** The WM-SGOD is an overlay district that is superimposed over the Underlying District. The boundaries of the WM-SGOD are delineated as the "Woburn Mall Smart Growth Overlay District" on the Official Zoning Map of the City of Woburn on file in the office of the City Clerk, said map hereby made a part of the Woburn Zoning Ordinance, and which includes approximately 23.009 acres of land presently owned by Woburn (Edens) LLC as further described in the deed recorded at Book 69877, Page 572 as referenced in the City of Woburn Assessors records. Pursuant to 59.04(1)(d)(1), at least fifty-one (51%) of the gross floor area of the WM-SGOD shall be devoted to residential use.

        The total gross floor area devoted to Non-residential uses within the WM-SGOD shall not exceed 49% of the total gross floor area of the Project.

    2. Allowed and Prohibited Uses **–** The following uses shall be deemed to be prohibited:

        a. The use of any Dwelling Unit as a Short Term Rental;

        b. The subletting or rental of any Dwelling Unit designated as below market rate or income-restricted, that are subject to affordability covenants or that are otherwise subject to housing or rental assistance under local, State or Federal law;

c. The subletting or rental of any Dwelling Unit subject to any requirement of local, State or Federal law that prohibits the leasing or subleasing of the unit as a Short Term Rental;

d. All Drive Up Customer Service Facilities except Financial Institutions; and

e. Any use not listed herein as an Allowed Use.

The following uses shall be deemed to be those permitted within the WM-SGOD:

| | |
|---|---|
| Principal Uses | |
| Residential Uses | |
| Multi-Family Dwelling Unit | Permitted By-Right |
| Mixed-Use Residential | Permitted By-Right |
| Commercial Uses (All are permitted only as part of a Mixed Use Project) | |
| Office | Permitted By-Right |
| Retail Use | Permitted By-Right |
| Restaurant, Full Service | Permitted By-Right |
| Restaurant, Fast Casual | Permitted By-Right if no Drive Up Customer Service Facility |
| Consumer Services | Permitted By-Right |
| Supermarket | Permitted By-Right |
| Muscular Therapy | Permitted By-Right |
| Hotel | Permitted By-Right |
| Health Club/Fitness Center | Permitted By-Right |
| Bowling Alley and/or Billiards | Permitted By-Right |
| Child Care Facility | Permitted By-Right |
| Auditorium, theater or place of public assembly | Permitted By-Right |
| Financial Institution with Drive Up Customer Service Facility | Permitted by Special Permit Only |
| Financial Institution with no Drive Up Customer Service Facility | Permitted By-Right |
| Automated Teller Machine (ATM), Freestanding | Permitted By-Right |
| Rooftop Dining | Permitted by Right |
| Accessory Uses | |
| Tenant Recreational Facilities | Permitted By-Right |
| Home occupation | Permitted By-Right |
| Parking accessory to any of the above permitted uses, including surface, garage-under, and structured parking | Permitted By-Right |
| Accessory uses customarily incidental to any of the above permitted principal uses | Permitted By-Right |

| | |
|---|---|
| Rooftop Solar | Permitted By-Right |
| Essential Services | Permitted By-Right |
| Special Events – The use of the property for programmed special events which may include, but not limited to, community events, outdoor festivals and/or recreational uses. Acceptable documentation related to public safety requirements shall be provided to the Building Commissioner, Police Chief and Fire Chief related to public safety protocols. | Permitted By-Right |

3. Dimensional and Other Requirements - Applications for Plan Approval shall be governed by this Section and the Design Standards for the WM-SGOD. All of the land within the WM-SGOD when used principally for a coordinated, integrated retail and/or commercial use and/or residential use shall be deemed one lot for dimensional and parking compliance requirements notwithstanding that the legal ownership in the land is divided by lease, in fee or otherwise, among two or more owners.

| Dimensional Requirement | Maximum Building Height or Maximum Stories |
|---|---|
| Maximum Building Height (Multi-Family Dwelling Unit and Mixed-Use Residential) | 85'/8 Stories |
| Maximum Building Height/Commercial Uses | 40'/2 Stories |
| Maximum Building Height – Hotel | 85'/8 Stories |
| Maximum Building Height – Cinema with surface parking underneath the building).<br><br>Maximum Building Height - Cinema without parking underneath the building. | 65'/2 Stories<br><br>40'/2 Stories |
| Minimum Lot Frontage | 60' |
| Minimum Lot Area | 12,000 sf |
| Minimum Front Setback (not applicable to structures for utilities and dumpsters) | 10' |
| Minimum Side and Rear Setback (This does not apply to internal lot lines within the WM-SGOD) | 10' |
| Interior Setback (between buildings on same lot) | 20' |
| Minimum Useable Open Space | 10% |

4. Parking Ratios - The following minimum parking ratios shall apply to all respective uses within the WM-SGOD. Parking compliance shall be

based on the total parking within the WM-SGOD and not on a lot by lot basis.

| USE | Number of Parking Spaces |
|---|---|
| All Permitted Commercial Uses | 3.8/1,000 sf of Net Floor Area (For purposes of determining the associated floor area of outdoor seating/patio space and Rooftop Dining that is a component of a Full Service Restaurant or Fast Casual Restaurant only 25% of the Net Floor Area shall be attributed toward total parking requirements. |
| Residential Use/Multifamily Dwelling | 1.5 spaces per unit (No additional parking spaces are required for leasing offices, mechanical or storage areas associated with the residential use.) |
| Mixed-Use Residential | 1.5 spaces per residential unit. (No additional parking spaces are required for leasing offices, mechanical or storage areas associated with the residential use.)<br><br>0/ tenant recreational facilities.<br><br>1 space per 1,000 sf of Net Floor Area for all other permitted commercial uses. |

5. Density Allowances/Multi-Family Residential – Subject to consistency the minimum residential densities for Multi-Family Residential use that must be allowed under the Governing Laws on land qualifying as Developable Land, as approved by DHCD, the maximum number of Multi-Family Residential units is capped at 350.

6. Age-Restricted Housing Units - Nothing in this Section 30 shall permit the imposition of restrictions on age upon Projects the WM-SGOD unless proposed or agreed to voluntarily by the Applicant. However, the Woburn City Council may, in its review of a submission under Section 30.1.7, allow a specific Project within the WM-SGOD designated exclusively for the elderly, persons with disabilities, or for assisted living, provided that any such Project shall be in compliance with all applicable fair housing laws and not less than twenty-five percent (25%) of the housing units in such a restricted Project shall be restricted as Affordable units. Any Project which

includes age-restricted residential units shall comply with applicable federal, state and local fair housing laws and regulations.

7. Rooftop Dining

    1. The rooftop dining area shall be associated with a Full-Service or Fast Casual Restaurant establishment doing business within the same building.

    2. The floor immediately below the rooftop area must either be occupied by a non-residential use or a provision inserted into the deeds or lease/rental agreement for each dwelling unit disclosing the existence of and general details about the rooftop dining operation and conditions associated with it (i.e. authorized business hours, occupancy limit, noise, customary activity levels, etc.).

    3. The preferred main access to the rooftop shall be from the interior space of the Full-Service or Fast-Casual Restaurant establishment doing business within the same building or from a common access stairway or elevator, provided an exterior access may be permitted upon demonstration of a de minimum impact on surrounding properties.

    4. Use of the rooftop shall not occur unless the Full-Service or Fast-Casual Restaurant establishment doing business in the same building is also open;

    5. Use of the rooftop shall not exceed the hours of operation for the Full-Service or Fast-Casual Restaurant establishment doing business within the same building.

    6. Equipment and structures associated with an elevator providing access to the rooftop area, restroom facilities required by State Building Code, and any service areas, preparation stations or similar facilities associated with the rooftop dining use shall:

        a. not exceed ten feet (10’) in height. Equipment and structures associated with an elevator providing access to the rooftop area may be authorized as part of a Plan Review to exceed the height limitation in order to provide access to the rooftop dining to the extent reasonably necessary. The elevator and all equipment associated with the elevator shall be required to be enclosed (contained within the interior of the building as opposed to being

located outside the elevator shaft/enclosure). The height shall not exceed what is reasonably required to comply with the Building Code requirements and reasonably required to install the elevator as determined by the Building Commissioner.

b. not to be included in the calculation of the Height of a Building or subject to the setback requirements;

c. not occupy more than fifteen percent (15%) of the gross area of the roof, except that for buildings that existed at the time of adoption of this Ordinance, the City Council may allow a greater percentage of roof coverage if it can be demonstrated that existing roof features require or justify such an increase. If the applicant can demonstrate that there is a pre-existing structure that applicant must design around and therefore requires applicant to exceed this limitation to provide adequate service and sanitary area, then the City Council may increase this percentage limitation; and

d. be properly locked and secured at the end of each business day.

7. Service areas, preparation stations and similar facilities shall be ancillary in nature as determined by the City Council and shall service the rooftop dining area only.

8. No food shall be stored on the rooftop except during the hours the rooftop dining area is in use. No alcohol shall be stored on the rooftop unless it is properly locked and secured at the end of each business day.

9. All lighting associated with rooftop dining area shall be designed to effectively eliminate glare, shall not be directed toward property lines and shall be turned off when the area is not in use.

10. Walls or railings to prevent patron encroachment within the setbacks as provided herein shall comply with applicable Massachusetts Building Code requirements and shall be set far enough back from the edge of the building to provide safe conditions for both restaurant employees, patrons and public, in the opinion of the City Council. These walls or railings shall, in concert with other structures and/or landscaping, provide a setback to prevent patron access from the edge of the building. At a minimum, the set back from the edge at the front of the building shall be ten (10) feet and the setback from the edge at the side and rear (if not abutting the wall of another building), shall be four

(4) feet. The side and rear setback from the edge of the building does not apply to the service and sanitary structures, if any.

11. Rooftop dining areas shall be kept free of trash, debris and food waste. All trash, debris, and food waste shall be properly stored while the rooftop dining area is in use and all trash, debris and food waste shall be removed from the rooftop entirely at the close of each business day.

12. Plan Review approval for rooftop dining shall be issued only to the applicant and shall not be transferrable without prior approval from the Woburn City Council.

13. The following restrictions shall apply:

    a. Propane heaters, landscaping, ornamental trees or other permanent decorative items shall be shown on the plan of record.

    b. Hot tubs shall not be allowed.

    c. Decorations of any kind shall not extend farther than 8 feet above the rooftop.

    e. Banners or signage shall not be allowed on or hanging over the rooftop.

    e. Neon signs or signs advertising adult beverages shall not be allowed.

8. Permitted Signage - Signage permitted within the WM-SGOD shall be subject to the limitation of Section 30.1.8 of the SGOD. In addition, the following Tenant Signs shall be permitted in the WM-SGOD, subject to the following limitations:

    1. Pre-Existing Signage - Any pre-existing ground mounted or free standing signage which shall become non-conforming as a result of the WM-SGOD Ordinance may remain in its present condition or be rehabilitated (refaced, modified or relocated) subject to the approval of the City Council as part of the Plan Review. Any Sign to be relocated shall be within fifteen feet of its existing location and shall not impact vehicular sight distance.

    2. Permitted Signage - Each tenant or business operation shall be permitted up to five (5) Signs within the WM-SGOD. (Qualifying Wayfinding Signage shall be exempted from this limitation.):

a. Wall Signs

i. Primary Wall Sign - One Primary Wall Sign shall be permitted for each use or business within a structure. The total area of a Primary Wall Sign shall be no greater than twenty (20) percent of the facade of the first two stories of the structure. Where more than one tenant occupies the same structure, the permissible area of the Primary Wall Signs specified above may be divided among two or more tenants. For the purposes of this section, a structure shall be considered to have one (1) façade and that being the side of the structure containing the majority of the front entrances for each use or business within the structure.

ii. Secondary Wall Sign - One Secondary Wall Sign shall be permitted for each separate entrance into a use or business within a structure or frontage on a street or parking area, except that there shall be no more than two (2) Secondary Wall Signs for each use or business within a structure. Secondary Wall Signs may not be erected on the same wall containing the Primary Wall Sign. The area of all Secondary Wall Signs shall be no greater than one-half the area permissible for the Primary Wall Sign.

b. Directory Signs - One Directory Sign shall be permitted at each entrance to a building or parking garage. The area of a Directory Sign shall be no greater than one (1) sq. ft. per occupant or tenant.

c. Blade Signs - One Blade Sign shall be permitted for each tenant per façade with customer storefront. Sign area shall not exceed two (2) feet by two (2) feet (2'x2') or may be two (2) feet in diameter and project three feet from the building façade.

d. Marquee Signs - One Marquee Sign shall be permitted for each use or business with a structure. Signs shall be attached to the sides or front of a Marquee and shall be seven (7') or more above the ground.

e. Awning Signs - One (1) Awning Sign is permitted per ground floor use provided it is located on the valance of the awning that letters are in a maximum of one (1) line and are no larger than six (6) inches in height. Awnings will not exceed four (4) feet in height from the bottom of awning and will not project more than three (3) feet from the wall. Signage on valance of awning will not be included in

total calculation of Sign area. The minimum allowable height will be eight (8) feet from bottom of awning to ground.

f. Free Standing Signs - Free Standing Signs which are affixed to the ground through a decorative base are to be permitted as follows (pole mounted Signs are prohibited):
   i. Two (2), two-sided Free Standing Signs up to 30 feet in height with a maximum of 300 square feet of surface area per side is permitted in place of the existing pylon Sign located on Mishawum Road with a second Free Standing/Monument Sign of identical or near identical proportions and aesthetic permitted along Commerce Way.
   ii. One lower-profile style Monument Sign (single or double sided), up to six (6) feet in height with a maximum of 120 square feet in surface area, is permitted at each vehicular entry from Mishawum Road and Commerce Way.

g. Window Signs - One Window Sign shall be permitted for each use or business with a structure. Area shall not exceed ten (10) percent of the window in which it is located.

h. Temporary Signs - Temporary Signs shall be permitted as follows:

   i. Temporary Signs: One (1) Temporary Sign to identify a property or use during the period from the submission of a Sign application to the Building Commissioners to the decision, provided that in the event of an unfavorable decision such Temporary Sign shall be removed forthwith, and provided that the Temporary Sign conforms with all applicable dimensional regulations of this section. Such Signs shall not exceed in the aggregate thirty-two (32) square feet.

   ii. Window Signs – Temporary Window Signs are only permitted during the interior build-out of a use or business, in which case the Window Sign may not cover more than 50% of the window in which it is located.

   iii. Construction Signs: One (1) or more Signs on a site during the construction or alteration of a building identifying the building, owner, contractor, architects and/or engineers and the business to be conducted therein. Such Signs shall not exceed in the aggregate thirty-two (32) square feet and shall be removed within forty-eight (48) hours after completion of the construction or alteration.

iv. Real Estate Signs: One (1) unlit Sign, not exceeding thirty-two (32) square feet advertising the sale, rental or lease of the premises or part of the premises or the willingness to build on the premises on which the Sign is displayed. Such Signs shall be removed within forty-eight (48) hours after the sale, rental or lease. Any other Signs used in connection with the sale, rental or lease of a particular premises, including but not limited to "Open House" or “Now Leasing” special events or directory-type Signs, shall be of a carry-away design only, not affixed in any permanent manner and shall be in place for a duration of not greater than forty-eight (48) hours per week.

v. Signs to be used for charitable or public purposes but which do not comply with the requirements of this ordinance may be authorized by the Building Commissioner for a period not to exceed thirty (30) days.

vi. Temporary Banners - Non-illuminated temporary banner erected on private property during holiday periods and affixed to a bracket on a light pole for display of special events. These temporary banners may not advertise any product or business and are limited to a period of no more than sixty (60) days before and ten (10) days after the event. Banners may not exceed 3’ x 2’.

vii. Temporary “For Lease” Sign for Multi-Family Residential Building. Following the initial temporary occupancy of the Multi-Family Residential building for a period not to exceed 9 months, two (2) Temporary Signs which may indicate the Project name and/or lease contact information with an area not to exceed thirty-two square feet. Any extension of the timeline allowed for the use of said signage shall be submitted to the City Council for review and approval and shall not be grated for longer than a 6 month period.

i. <u>Sidewalk Sign or A-Frame Signs</u> - Shall be permitted as follows: There shall be no more than one Sidewalk or A-frame Sign per storefront. Said Sign shall not exceed three (3) feet in height and a total of nine (9) square feet in area and shall have a weighed base to provide stability. Signs shall be located entirely on private property and within 15 feet of a public entrance to the associated tenant space. Said Sign may convey changeable messages through the use of re-writable surfaces, such as chalk boards or dry-erase boards. Paper Signs shall not be attached to an A-frame

Sign. An A-frame Sign may take on any design form and need not use a conventional “A-frame” or sandwich board design if all dimensional requirements are met. Said Signs shall only be displayed during hours of operation and must be stored indoors otherwise. All Sidewalk Signs or A-Frame Signs shall be moved indoors during inclement weather.

j. Canopy Signs - One Canopy Sign shall be permitted for each use or business within a structure not to exceed an area equal to 25 percent of the face area of the canopy. A Canopy Sign may either be spindle-mounted to the roof of the canopy or mounted to the front fascia of the canopy. Canopy Signs shall not extend horizontally beyond the limits of the canopy. The fascia-mounted type must not extend vertically above or below the cross section of the canopy. Canopy Signs are limited to text and digits. Logos or graphics are not permitted.

(added1/24/2019; scrivener’s correction approved 3/5/2019)