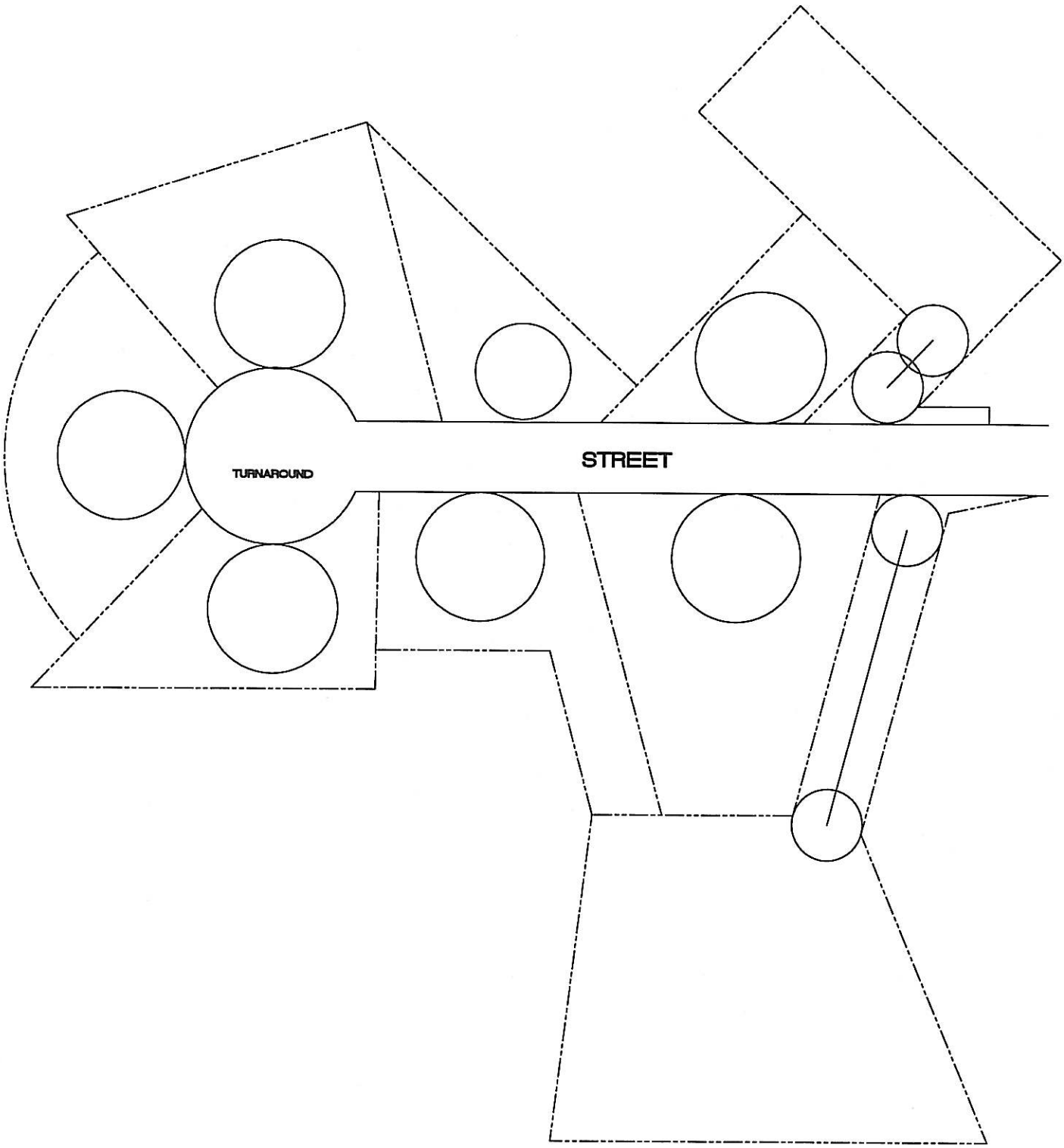ATTACHMENT "A" - LOT WIDTH ILLUSTRATION